RADIATORS

ITALIAN
PROFESSIONAL
HEATING

RADIATORS

TECHNICAL CATALOGUE

RADIATORS

ITALIAN
PROFESSIONAL
HEATING

TECHNICAL CATALOGUE

cod. 5881017400_r00_08/2024

We want to transmit our values through top quality products in respect of the environment, placing our experience in designing technical heating solutions at the service of our partners today and tomorrow.

RADIATORS S.P.A.

Strada Statale 54, nr. 21
33040 Moimacco (UD) Italy
www.radiators-spa.it

Customer Service
sales.dlr@dlradiators.it

RADIATORS S.P.A. is part of Sterlad Group

DL RADIATORS

ITALIAN
PROFESSIONAL
HEATING

We guarantee your long-term comfort

Professional skills, organisational ability, pioneering technologies, all-Italian creativity and attention to market expectations, anticipated with pioneering products: these are the factors that have established RADIATORS as a standard setter for the last 50 years.

Combining a meticulous finish with functionality, RADIATORS have a mission for innovation. With painstaking attention to technical detail and the materials used, they are designed with the most selective and demanding consumers in mind.

15 Year warranty hydronic products

2 Year warranty electrical parts

5 Year warranty electrical heating appliance

LASER

Laser welding

Available in a range of finishes

Fixing kit included

EASY FIT

Concealed brackets kit included

Low temperature efficiency

Low consumption

Horizontal/Vertical installation

180° reversible

Wi-Fi connectivity

ASV

Automatic safety valve

DRY

Dry inertia technology excludes the use of any convective fluid, heating the air directly.

FLUID

Fluid technology replicates the feeling of warmth from a hydronic heating body.

INDEX

HYDRAULIC FUNCTIONING

With their exceptional heat output, hydraulic radiators guarantee all-round warmth. The wide range of modular solutions available with their elegant and distinctive design and numerous combinations of size and tube geometry adapt perfectly to every need and any type of home.

Multicolonna

11 2 Columns
15 3 Columns
19 4 Columns
23 5 Columns
27 6 Columns
31 Hygiene
33 Integrated

Plattella

47 C4 Compact
55 C4 Special
59 V6 L
65 V6 C
71 C4 Hygiene
77 V6 Hygiene
83 C6 Hygiene

Linear

103 C4 Compact
109 C4 Special
113 V6 L
119 V6 C
125 C4 Hygiene
131 V6 Hygiene
137 C6 Hygiene

Towel Warmers

157 FANTASIA Linea
163 FANTASIA Parentesi
164 UNIQUE
166 CORTINA
167 QUARZO
168 COBALTO
169 AGATA
170 IRIDIO
171 COSY
172 LOOP
173 SHADE
174 SLASH
175 WINNER
176 STRING

Design

181 GATE
183 MIRÒ 10
187 MIRÒ 20
191 STREAM

ELECTRIC FUNCTIONING

Perfect for heating areas without a hydraulic installation, electric radiators provide rapid uniform heat without drying the air. Thanks to the numerous functions of the easy and intuitive electronic controls, consumption can be controlled to avoid wasting energy. Available in a wide range of models, they are quick and easy to install.

Towel Warmers

194 FANTASIA Digital
196 FANTASIA On/Off
200 FANTASIA DRY
201 UNIQUE On/Off
202 CORTINA On/Off
203 COBALTO Digital
204 AGATA Digital
205 IRIDIO Digital
206 WINNER Digital

Radiators

211 RAYO
212 CLOUD
214 SMOOTH
216 ALU SIMPLE ***PLUS*** Dry
217 ALU SIMPLE ***PLUS*** Fluid
218 SIGHT
219 ALYNE Fluid

AIR FLOW TECHNOLOGY

Our exclusive E-Flow technology gives your three products in one, adding the advantages of a traditional electric fan heater to our range of bathroom towel warmers. The fan heater can be used alone to heat small rooms quickly and efficiently, in combination with the towel warmer to increase output, or as just a towel warmer. Air Flow technology is available in combination with electric towel warmers E-Flow or with hydraulic towel warmers H-Flow.

E-Flow

222 ELEGANCE E-Flow
224 COBALTO E-Flow
226 AGATA E-Flow
228 WINNER E-Flow

Accessories

231 Hydraulic connections
240 Fixing kit
272 Accessories Towel Warmers
272 Accessories Electric Radiators and Towel Warmers

General Information

277 Electrical devices
279 Mode and functions electrical devices
283 Chemical treatment of the water
285 Finishes
287 Warranty

The right dimensions for every need.

The wide RADIATORS range means you can always find the height corresponding to the pipe centre you want to replace.

The wide choice of different models testifies to the flexibility of the ranges able to satisfy all market demands.

The following table gives some of the main combinations of heating appliance to be replaced and corresponding RADIATORS product.

Radiator to be replaced with corresponding Radiators product

Pipe centre of radiator to be replaced	Corresponding height RADIATORS range			
Panel	Multicolonna	Plattella	Linear	Mirò
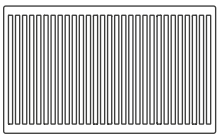	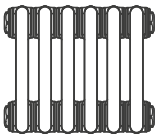	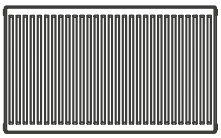		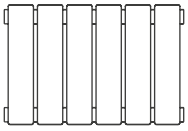
Pipe centre 440	H. 510	H. 500	H. 500	-
Pipe centre 540	H. 610	H. 600	H. 600	-
Pipe centre 840	H. 910	H. 900	H. 900	-
Pipe centre of radiator to be replaced	Corresponding height RADIATORS range			
Bar	Multicolonna	Plattella	Linear	Mirò
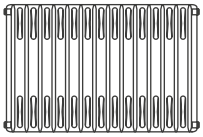	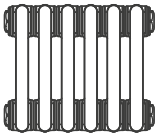	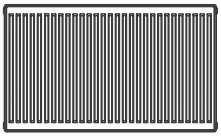		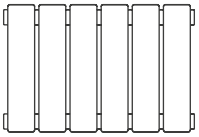
Pipe centre 330	H. 400	-	-	-
Pipe centre 430	H. 500	-	-	-
Pipe centre 530	H. 600	-	-	-
Pipe centre 730	H. 800	-	-	-
Pipe centre 930	H. 1000	-	-	-
Pipe centre of radiator to be replaced	Corresponding height RADIATORS range			
Aluminium	Multicolonna	Plattella	Linear	Mirò
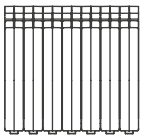	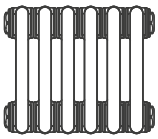	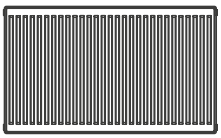		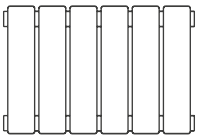
Pipe centre 500	H. 570	H. 600	H. 600	H. 550
Pipe centre 600	H. 670	H. 700	H. 700	H. 650
Pipe centre 700	H. 770	-	-	H. 750
Pipe centre 800	H. 870	-	-	H. 850
Pipe centre of radiator to be replaced	Corresponding height RADIATORS range			
Cast iron	Multicolonna	Plattella	Linear	Mirò
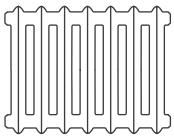	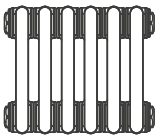	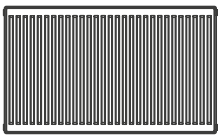		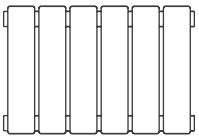
Pipe centre 615	H. 685	-	-	H. 665
Pipe centre 815	H. 885	-	-	H. 865

Dimensions are in millimeters (mm)

The Multicolonna range stands out for its great design flexibility, allowing it to be adapted to any space or type of application to become a genuine interior design accessory able to add an intriguing touch to any room.

Multicolonna

Multicolonna range

The Multicolonna range stands out for its great design flexibility, allowing it to be adapted to any space or type of application to become a genuine interior design accessory able to add an intriguing touch to any room. It is available in 2, 3, 4, 5 and 6 column versions with heights from 300 to 2500 mm.

As well as the standard version, the range includes Multicolonna Integrated with thermostatic valve, Multicolonna Hygiene for installation in environments where cleanliness is particularly important, Multicolonna with cast iron, aluminium and bar pipe centre versions to replace old radiators and a special curved version of Multicolonna with welded feet.

Innovation

RADIATORS was the first company to introduce laser welding for Multicolonna radiators. A pioneer in technological processes, it has set new quality standards and become an absolute point of reference in the world market.

Quality and performance

The quality of Multicolonna is obvious whichever way you look at it. The glossy finish of the three-phase painting and soft rounded lines of the elements make it so attractive it becomes a genuine interior design accessory wherever it is installed.

Precise laser welding gives perfectly smooth shapes on the outside of the product and no welding residue inside. The line-end quality controls are stringent and rigorous to guarantee a product with a unique appearance and impeccable construction.

In-depth study of thermodynamic flows has optimised the product's conduction, radiation and convection processes, making it a reference point among tubular radiators, the best possible compromise between technology and product design.

Painting

A particular feature of the Multicolonna range is the high-quality paint finish, thanks to an industrial process borrowed from the automotive sector. Colouring in White RAL 9016, complying with DIN55900.

Certification and compliance marks

Multicolonna radiators are CE certified and meet the specifications required by the French NF standard. All heat outputs are measured and certified according to the European EN 442 standard.

Warranty

Thanks to the high-quality standards and implementation of automated control systems, RADIATORS is the only company able to guarantee its hydronic products for 15 years.

Multicolonna 2 Columns

Image for illustrative purposes only

Technical specifications

Material: UNI EN 10130:2007 steel
Round vertical tubes, diameter 25 mm
Element width: 46 mm
Laser-welded manifolds
Manifold thread 1"1/4 G rhs or lhs
Working pressure 10 bar
Test pressure 13 bar
Maximum operating temperature 110° C

Dimensions are in millimeters (mm)

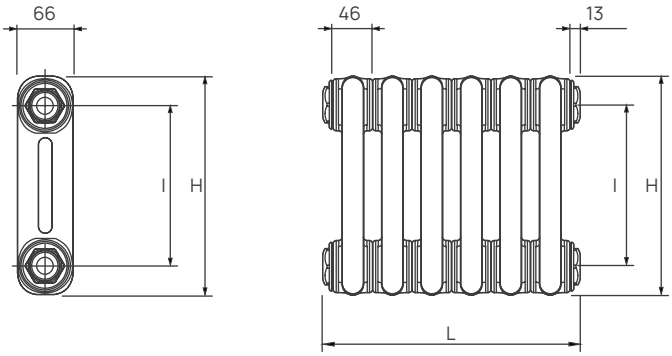

H: height
I : pipe centre (H-70)
L: length with bungs fitted (no. elements x 46) + 26

2 Columns

Multicolonna

Height	Code	Pipe centre	Empty weight	Capacity	Elements	Output Δt 50°C	Output Δt 42,5°C	Output Δt 30°C	Output Δt 20°C	Esp.
H (mm)	Standard configu-ration	I (mm)	Kg	L	Max no.	W	W	W	W	N.
* 300	0Q0020300ee0000	230	0,5	0,4	40	24,3	19,9	12,9	7,8	1,244
* 400	0Q0020400ee0000	L 330	0,6	0,5	40	31,1	25,4	16,4	9,9	1,249
* 500	0Q0020500ee0000	L 430	0,8	0,6	40	38,0	31,0	20,0	12,0	1,255
510	0Q0020510ee0000	440	0,8	0,6	40	38,7	31,5	20,4	12,2	1,256
* 550	0Q0020550ee0000	480	0,9	0,6	40	41,4	33,8	21,8	13,1	1,258
570	0Q0020570ee0000	A 500	0,9	0,6	40	42,8	34,8	22,5	13,5	1,259
* 600	0Q0020600ee0000	L 530	0,9	0,7	40	44,8	36,5	23,5	14,1	1,261
610	0Q0020610ee0000	540	0,9	0,7	40	45,5	37,1	23,9	14,3	1,262
670	0Q0020670ee0000	A 600	1,0	0,7	40	49,6	40,3	26,0	15,5	1,265
* 685	0Q0020685ee0000	G 615	1,1	0,7	40	50,6	41,2	26,5	15,8	1,266
* 750	0Q0020750ee0000	680	1,1	0,8	40	55,0	44,7	28,7	17,2	1,270
770	0Q0020770ee0000	A 700	1,1	0,8	40	56,3	45,8	29,4	17,6	1,271
800	0Q0020800ee0000	L 730	1,2	0,8	40	58,4	47,7	30,5	18,3	1,273
870	0Q0020870ee0000	A 800	1,2	0,8	40	63,1	51,5	32,8	19,6	1,278
* 885	0Q0020885ee0000	G 815	1,4	0,9	40	64,1	52,1	33,4	19,9	1,278
* 900	0Q0020900ee0000	830	1,4	0,9	40	65,1	53,0	33,9	20,2	1,279
910	0Q0020910ee0000	840	1,4	0,9	40	65,8	53,4	34,2	20,4	1,279
* 1000	0Q0021000ee0000	L 930	1,5	1,0	40	72 ,1	58,6	37,4	22,2	1,285
* 1200	0Q0021200ee0000	1130	1,8	1,1	30	85,6	69,4	44,2	26,2	1,294
* 1500	0Q0021500ee0000	1430	2,2	1,4	30	106,0	86,0	54,6	32,1	1,307
* 1800	0Q0021800ee0000	1730	2,6	1,6	24	128,0	103,2	65,0	38,1	1,321
* 2000	0Q0022000ee0000	1930	2,9	1,7	24	142,0	114,7	72,5	42,4	1,320
* 2200	0Q0022200ee0000	2130	3,2	1,9	20	157,0	126,9	80,1	46,9	1,320
* 2500	0Q0022500ee0000	2430	3,6	2,1	20	180,0	145,1	91,8	53,7	1,319

A = pipe centre compatible with aluminium radiators
G = pipe centre compatible with cast iron radiators
L = pipe centre compatible with bar radiators
ee = number of elements
* = The indicated codes are NF certified

Standard Configuration

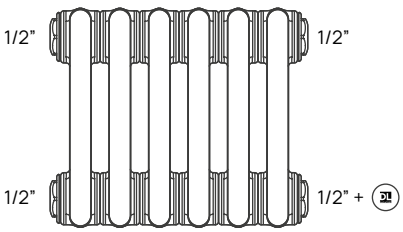

Standard connections and accessories:

In the standard configuration, the Multicolonna radiator is delivered with 4 x 1/2" reducers and 1 x 1/2" blind plug pre-mounted. This configuration is highly versatile as it makes the product fully reversible. Vent and brackets not supplied as standard.

Possible battery lengths:

Welded from 2 to a maximum of 40 elements.
For batteries above the dimensional limit, nippling can be carried out directly on site by ordering the relevant accessories.

2 Columns - Depth 66 mm - Heat outputs at Δt 50 °C - Data table for complete batteries with reducers mounted

Height			300	400	500	510	550	570	600	610	670	685	750	770
Maximum no. of elements			40	40	40	40	40	40	40	40	40	40	40	40
Length (mm) / No. Elements	118 / 2	W	49	62	76	77	83	86	90	91	99	101	110	113
Length (mm) / No. Elements	164 / 3	W	73	93	114	116	124	128	134	137	149	152	165	169
Length (mm) / No. Elements	210 / 4	W	97	124	152	155	166	171	179	182	198	202	220	225
Length (mm) / No. Elements	256 / 5	W	122	156	190	194	207	214	224	228	248	253	275	282
Length (mm) / No. Elements	302 / 6	W	146	187	228	232	248	257	269	273	298	304	330	338
Length (mm) / No. Elements	348 / 7	W	170	218	266	271	290	300	314	319	347	354	385	394
Length (mm) / No. Elements	394 / 8	W	194	249	304	310	331	342	358	364	397	405	440	450
Length (mm) / No. Elements	440 / 9	W	219	280	342	348	373	385	403	410	446	455	495	507
Length (mm) / No. Elements	486 / 10	W	243	311	380	387	414	428	448	455	496	506	550	563
Length (mm) / No. Elements	532 / 11	W	267	342	418	426	455	471	493	501	546	557	605	619
Length (mm) / No. Elements	578 / 12	W	292	373	456	464	497	514	538	546	595	607	660	676
Length (mm) / No. Elements	624 / 13	W	316	404	494	503	538	556	582	592	645	658	715	732
Length (mm) / No. Elements	670 / 14	W	340	435	532	542	580	599	627	637	694	708	770	788
Length (mm) / No. Elements	716 / 15	W	365	467	570	581	621	642	672	683	744	759	825	845
Length (mm) / No. Elements	762 / 16	W	389	498	608	619	662	685	717	728	794	810	880	901
Length (mm) / No. Elements	808 / 17	W	413	529	646	658	704	728	762	774	843	860	935	957
Length (mm) / No. Elements	854 / 18	W	437	560	684	697	745	770	806	819	893	911	990	1013
Length (mm) / No. Elements	900 / 19	W	462	591	722	735	787	813	851	865	942	961	1045	1070
Length (mm) / No. Elements	946 / 20	W	486	622	760	774	828	856	896	910	992	1012	1100	1126
Length (mm) / No. Elements	992 / 21	W	510	653	798	813	869	899	941	956	1042	1063	1155	1182
Length (mm) / No. Elements	1038 / 22	W	535	684	836	851	911	942	986	1001	1091	1113	1210	1239
Length (mm) / No. Elements	1084 / 23	W	559	715	874	890	952	984	1030	1047	1141	1164	1265	1295
Length (mm) / No. Elements	1130 / 24	W	583	746	912	929	994	1027	1075	1092	1190	1214	1320	1351
Length (mm) / No. Elements	1176 / 25	W	608	778	950	968	1035	1070	1120	1138	1240	1265	1375	1408
Length (mm) / No. Elements	1222 / 26	W	632	809	988	1006	1076	1113	1165	1183	1290	1316	1430	1464
Length (mm) / No. Elements	1268 / 27	W	656	840	1026	1045	1118	1156	1210	1229	1339	1366	1485	1520
Length (mm) / No. Elements	1314 / 28	W	680	871	1064	1084	1159	1198	1254	1274	1389	1417	1540	1576
Length (mm) / No. Elements	1360 / 29	W	705	902	1102	1122	1201	1241	1299	1320	1438	1467	1595	1633
Length (mm) / No. Elements	1406 / 30	W	729	933	1140	1161	1242	1284	1344	1365	1488	1518	1650	1689
Length (mm) / No. Elements	1452 / 31	W	753	964	1178	1200	1283	1327	1389	1411	1538	1569	1705	1745
Length (mm) / No. Elements	1498 / 32	W	778	995	1216	1238	1325	1370	1434	1456	1587	1619	1760	1802
Length (mm) / No. Elements	1544 / 33	W	802	1026	1254	1277	1366	1412	1478	1502	1637	1670	1815	1858
Length (mm) / No. Elements	1590 / 34	W	826	1057	1292	1316	1408	1455	1523	1547	1686	1720	1870	1914
Length (mm) / No. Elements	1636 / 35	W	851	1089	1330	1355	1449	1498	1568	1593	1736	1771	1925	1971
Length (mm) / No. Elements	1682 / 36	W	875	1120	1368	1393	1490	1541	1613	1638	1786	1822	1980	2027
Length (mm) / No. Elements	1728 / 37	W	899	1151	1406	1432	1532	1584	1658	1684	1835	1872	2035	2083
Length (mm) / No. Elements	1774 / 38	W	923	1182	1444	1471	1573	1626	1702	1729	1885	1923	2090	2139
Length (mm) / No. Elements	1820 / 39	W	948	1213	1482	1509	1615	1669	1747	1775	1934	1973	2145	2196
Length (mm) / No. Elements	1866 / 40	W	972	1244	1520	1548	1656	1712	1792	1820	1984	2024	2200	2252

2 Columns - Depth 66 mm - Heat outputs at Δt 50 °C - Data table for complete batteries with reducers mounted

Height			800	870	885	900	910	1000	1200	1500	1800	2000	2200	2500
Maximum no. of elements			40	40	40	40	40	40	30	30	24	24	20	20
Length (mm) / No. Elements	118 / 2	W	117	126	128	130	132	144	171	212	256	284	314	360
Length (mm) / No. Elements	164 / 3	W	175	189	192	195	197	216	257	318	384	426	471	540
Length (mm) / No. Elements	210 / 4	W	234	252	256	260	263	288	342	424	512	568	628	720
Length (mm) / No. Elements	256 / 5	W	292	316	321	326	329	361	428	530	640	710	785	900
Length (mm) / No. Elements	302 / 6	W	350	379	385	391	395	433	514	636	768	852	942	1080
Length (mm) / No. Elements	348 / 7	W	409	442	449	456	461	505	599	742	896	994	1099	1260
Length (mm) / No. Elements	394 / 8	W	467	505	513	521	526	577	685	848	1024	1136	1256	1440
Length (mm) / No. Elements	440 / 9	W	526	568	577	586	592	649	770	954	1152	1278	1413	1620
Length (mm) / No. Elements	486 / 10	W	584	631	641	651	658	721	856	1060	1280	1420	1570	1800
Length (mm) / No. Elements	532 / 11	W	642	694	705	716	724	793	942	1166	1408	1562	1727	1980
Length (mm) / No. Elements	578 / 12	W	701	757	769	781	790	865	1027	1272	1536	1704	1884	2160
Length (mm) / No. Elements	624 / 13	W	759	820	833	846	855	937	1113	1378	1664	1846	2041	2340
Length (mm) / No. Elements	670 / 14	W	818	883	897	911	921	1009	1198	1484	1792	1988	2198	2520
Length (mm) / No. Elements	716 / 15	W	876	947	962	977	987	1082	1284	1590	1920	2130	2355	2700
Length (mm) / No. Elements	762 / 16	W	934	1010	1026	1042	1053	1154	1370	1696	2048	2272	2512	2880
Length (mm) / No. Elements	808 / 17	W	993	1073	1090	1107	1119	1226	1455	1802	2176	2414	2669	3060
Length (mm) / No. Elements	854 / 18	W	1051	1136	1154	1172	1184	1298	1541	1908	2304	2556	2826	3240
Length (mm) / No. Elements	900 / 19	W	1110	1199	1218	1237	1250	1370	1626	2014	2432	2698	2983	3420
Length (mm) / No. Elements	946 / 20	W	1168	1262	1282	1302	1316	1442	1712	2120	2560	2840	3140	3600
Length (mm) / No. Elements	992 / 21	W	1226	1325	1346	1367	1382	1514	1798	2226	2688	2982	-	-
Length (mm) / No. Elements	1038 / 22	W	1285	1388	1410	1432	1448	1586	1883	2332	2816	3124	-	-
Length (mm) / No. Elements	1084 / 23	W	1343	1451	1474	1497	1513	1658	1969	2438	2944	3266	-	-
Length (mm) / No. Elements	1130 / 24	W	1402	1514	1538	1562	1579	1730	2054	2544	3072	3408	-	-
Length (mm) / No. Elements	1176 / 25	W	1460	1578	1603	1628	1645	1803	2140	2650	-	-	-	-
Length (mm) / No. Elements	1222 / 26	W	1518	1641	1667	1693	1711	1875	2226	2756	-	-	-	-
Length (mm) / No. Elements	1268 / 27	W	1577	1704	1731	1758	1777	1947	2311	2862	-	-	-	-
Length (mm) / No. Elements	1314 / 28	W	1635	1767	1795	1823	1842	2019	2397	2968	-	-	-	-
Length (mm) / No. Elements	1360 / 29	W	1694	1830	1859	1888	1908	2091	2482	3074	-	-	-	-
Length (mm) / No. Elements	1406 / 30	W	1752	1893	1923	1953	1974	2163	2568	3180	-	-	-	-
Length (mm) / No. Elements	1452 / 31	W	1810	1956	1987	2018	2040	2235	-	-	-	-	-	-
Length (mm) / No. Elements	1498 / 32	W	1869	2019	2051	2083	2106	2307	-	-	-	-	-	-
Length (mm) / No. Elements	1544 / 33	W	1927	2082	2115	2148	2171	2379	-	-	-	-	-	-
Length (mm) / No. Elements	1590 / 34	W	1986	2145	2179	2213	2237	2451	-	-	-	-	-	-
Length (mm) / No. Elements	1636 / 35	W	2044	2209	2244	2279	2303	2524	-	-	-	-	-	-
Length (mm) / No. Elements	1682 / 36	W	2102	2272	2308	2344	2369	2596	-	-	-	-	-	-
Length (mm) / No. Elements	1728 / 37	W	2161	2335	2372	2409	2435	2668	-	-	-	-	-	-
Length (mm) / No. Elements	1774 / 38	W	2219	2398	2436	2474	2500	2740	-	-	-	-	-	-
Length (mm) / No. Elements	1820 / 39	W	2278	2461	2500	2539	2566	2812	-	-	-	-	-	-
Length (mm) / No. Elements	**1866** / **40**	W	2336	2524	2564	2604	2632	2884	-	-	-	-	-	-

Multicolonna 3 Columns

Image for illustrative purposes only

Technical specifications

Material: UNI EN 10130:2007 steel
Round vertical tubes, diameter 25 mm
Element width: 46 mm
Laser-welded manifolds
Manifold thread 1"1/4 G rhs or lhs
Working pressure 10 bar
Test pressure 13 bar
Maximum operating temperature 110° C

Dimensions are in millimeters (mm)

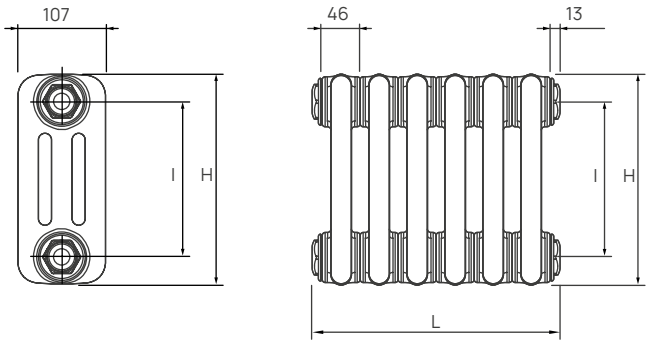

H: height
I : pipe centre (H-70)
L: length with bungs fitted (no. elements x 46) + 26

3 Columns

Multicolonna

Height	Code	Pipe centre	Empty weight	Capacity	Elements	Output Δt 50°C	Output Δt 42,5°C	Output Δt 30°C	Output Δt 20°C	Esp.
H (mm)	Standard configuration	I (mm)	Kg	L	Max no.	W	W	W	W	N.
* 300	0Q0030300ee0000	230	0,5	0,6	40	33,1	27,0	17,5	10,5	1,249
* 400	0Q0030400ee0000	L 330	0,8	0,7	40	42,3	34,5	22,3	13,4	1,254
* 500	0Q0030500ee0000	L 430	1,0	0,8	40	51,6	42,0	27,1	16,3	1,258
510	0Q0030510ee0000	440	1,0	0,8	40	52,5	42,8	27,6	16,6	1,259
* 550	0Q0030550ee0000	480	1,2	0,9	40	56,2	45,8	29,5	17,7	1,261
570	0Q0030570ee0000	A 500	1,3	0,9	40	58,0	47,3	30,5	18,3	1,262
* 600	0Q0030600ee0000	L 530	1,3	1,0	40	60,8	49,5	31,9	19,1	1,263
610	0Q0030610ee0000	540	1,3	1,0	40	61,7	50,2	32,3	19,4	1,264
670	0Q0030670ee0000	A 600	1,5	1,0	40	67,2	54,6	35,2	21,0	1,266
* 685	0Q0030685ee0000	G 615	1,6	1,1	40	68,6	55,8	35,9	21,5	1,267
* 750	0Q0030750ee0000	680	1,7	1,1	40	74,5	60,6	38,9	23,3	1,270
770	0Q0030770ee0000	A 700	1,8	1,1	40	76,3	62,1	39,9	23,8	1,271
800	0Q0030800ee0000	L 730	1,8	1,2	40	79 ,1	64,3	41,3	24,6	1,272
870	0Q0030870ee0000	A 800	2,0	1,3	40	85,5	69,4	44,6	26,5	1,275
* 885	0Q0030885ee0000	G 815	2,0	1,3	40	86,9	70,6	45,3	27,0	1,276
* 900	0Q0030900ee0000	830	2,0	1,3	40	88,2	71,8	46,0	27,4	1,277
910	0Q0030910ee0000	840	2,0	1,3	40	89,2	72,5	46,4	27,7	1,277
* 1000	0Q0031000ee0000	L 930	2 ,1	1,4	40	97,4	79,0	50,6	30,1	1,281
* 1200	0Q0031200ee0000	1130	2,5	1,6	30	116,0	94,2	60,0	35,6	1,290
* 1500	0Q0031500ee0000	1430	2,7	2,0	30	144,0	116,8	74,2	43,8	1,302
* 1800	0Q0031800ee0000	1730	3,3	2,3	24	174,0	140,4	88,7	52 ,1	1,315
* 2000	0Q0032000ee0000	1930	4,0	2,6	24	194,0	156,7	99,0	58,2	1,313
* 2200	0Q0032200ee0000	2130	4,4	2,8	20	214,0	173,4	110,0	64,5	1,311
* 2500	0Q0032500ee0000	2430	4,8	3,2	20	246,0	199,2	126,0	74,3	1,308

A = pipe centre compatible with aluminium radiators
G = pipe centre compatible with cast iron radiators
L = pipe centre compatible with bar radiators
ee = number of elements
* = The indicated codes are NF certified

Standard configuration

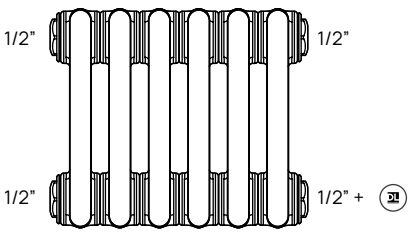

Standard connections and accessories:

In the standard configuration, the Multicolonna radiator is delivered with 4 x 1/2" reducers and 1 x 1/2" blind plug pre-mounted. This configuration is highly versatile as it makes the product fully reversible. Vent and brackets not supplied as standard.

Possible battery lengths:

Welded from 2 to a maximum of 40 elements.
For batteries above the dimensional limit, nippling can be carried out directly on site by ordering the relevant accessories.

3 Columns - Depth 107 mm - Heat outputs at Δt 50 °C - Data table for complete batteries with reducers mounted

Height			300	400	500	510	550	570	600	610	670	685	750	770
Maximum no. of elements			40	40	40	40	40	40	40	40	40	40	40	40
Length (mm) / No. Elements	118 / 2	W	66	85	103	105	112	116	122	123	134	137	149	153
Length (mm) / No. Elements	164 / 3	W	99	127	155	158	169	174	182	185	202	206	224	229
Length (mm) / No. Elements	210 / 4	W	132	169	206	210	225	232	243	247	269	274	298	305
Length (mm) / No. Elements	256 / 5	W	166	212	258	263	281	290	304	309	336	343	373	382
Length (mm) / No. Elements	302 / 6	W	199	254	310	315	337	348	365	370	403	412	447	458
Length (mm) / No. Elements	348 / 7	W	232	296	361	368	393	406	426	432	470	480	522	534
Length (mm) / No. Elements	394 / 8	W	265	338	413	420	450	464	486	494	538	549	596	610
Length (mm) / No. Elements	440 / 9	W	298	381	464	473	506	522	547	555	605	617	671	687
Length (mm) / No. Elements	486 / 10	W	331	423	516	525	562	580	608	617	672	686	745	763
Length (mm) / No. Elements	532 / 11	W	364	465	568	578	618	638	669	679	739	755	820	839
Length (mm) / No. Elements	578 / 12	W	397	508	619	630	674	696	730	740	806	823	894	916
Length (mm) / No. Elements	624 / 13	W	430	550	671	683	731	754	790	802	874	892	969	992
Length (mm) / No. Elements	670 / 14	W	463	592	722	735	787	812	851	864	941	960	1043	1068
Length (mm) / No. Elements	716 / 15	W	497	635	774	788	843	870	912	926	1008	1029	1118	1145
Length (mm) / No. Elements	762 / 16	W	530	677	826	840	899	928	973	987	1075	1098	1192	1221
Length (mm) / No. Elements	808 / 17	W	563	719	877	893	955	986	1034	1049	1142	1166	1267	1297
Length (mm) / No. Elements	854 / 18	W	596	761	929	945	1012	1044	1094	1111	1210	1235	1341	1373
Length (mm) / No. Elements	900 / 19	W	629	804	980	998	1068	1102	1155	1172	1277	1303	1416	1450
Length (mm) / No. Elements	946 / 20	W	662	846	1032	1050	1124	1160	1216	1234	1344	1372	1490	1526
Length (mm) / No. Elements	992 / 21	W	695	888	1084	1103	1180	1218	1277	1296	1411	1441	1565	1602
Length (mm) / No. Elements	1038 / 22	W	728	931	1135	1155	1236	1276	1338	1357	1478	1509	1639	1679
Length (mm) / No. Elements	1084 / 23	W	761	973	1187	1208	1293	1334	1398	1419	1546	1578	1714	1755
Length (mm) / No. Elements	1130 / 24	W	794	1015	1238	1260	1349	1392	1459	1481	1613	1646	1788	1831
Length (mm) / No. Elements	1176 / 25	W	828	1058	1290	1313	1405	1450	1520	1543	1680	1715	1863	1908
Length (mm) / No. Elements	1222 / 26	W	861	1100	1342	1365	1461	1508	1581	1604	1747	1784	1937	1984
Length (mm) / No. Elements	1268 / 27	W	894	1142	1393	1418	1517	1566	1642	1666	1814	1852	2012	2060
Length (mm) / No. Elements	1314 / 28	W	927	1184	1445	1470	1574	1624	1702	1728	1882	1921	2086	2136
Length (mm) / No. Elements	1360 / 29	W	960	1227	1496	1523	1630	1682	1763	1789	1949	1989	2161	2213
Length (mm) / No. Elements	1406 / 30	W	993	1269	1548	1575	1686	1740	1824	1851	2016	2058	2235	2289
Length (mm) / No. Elements	1452 / 31	W	1026	1311	1600	1628	1742	1798	1885	1913	2083	2127	2310	2365
Length (mm) / No. Elements	1498 / 32	W	1059	1354	1651	1680	1798	1856	1946	1974	2150	2195	2384	2442
Length (mm) / No. Elements	1544 / 33	W	1092	1396	1703	1733	1855	1914	2006	2036	2218	2264	2459	2518
Length (mm) / No. Elements	1590 / 34	W	1125	1438	1754	1785	1911	1972	2067	2098	2285	2332	2533	2594
Length (mm) / No. Elements	1636 / 35	W	1159	1481	1806	1838	1967	2030	2128	2160	2352	2401	2608	2671
Length (mm) / No. Elements	1682 / 36	W	1192	1523	1858	1890	2023	2088	2189	2221	2419	2470	2682	2747
Length (mm) / No. Elements	1728 / 37	W	1225	1565	1909	1943	2079	2146	2250	2283	2486	2538	2757	2823
Length (mm) / No. Elements	1774 / 38	W	1258	1607	1961	1995	2136	2204	2310	2345	2554	2607	2831	2899
Length (mm) / No. Elements	1820 / 39	W	1291	1650	2012	2048	2192	2262	2371	2406	2621	2675	2906	2976
Length (mm) / No. Elements	1866 / 40	W	1324	1692	2064	2100	2248	2320	2432	2468	2688	2744	2980	3052

3 Columns - Depth 107 mm - Heat outputs at Δt 50 °C - Data table for complete batteries with reducers mounted

Height			800	870	885	900	910	1000	1200	1500	1800	2000	2200	2500
Maximum no. of elements			40	40	40	40	40	40	30	30	24	24	20	20
Length (mm) / No. Elements	118 / 2	W	158	171	174	176	178	195	232	288	348	388	428	492
Length (mm) / No. Elements	164 / 3	W	237	257	261	265	268	292	348	432	522	582	642	738
Length (mm) / No. Elements	210 / 4	W	316	342	348	353	357	390	464	576	696	776	856	984
Length (mm) / No. Elements	256 / 5	W	396	428	435	441	446	487	580	720	870	970	1070	1230
Length (mm) / No. Elements	302 / 6	W	475	513	521	529	535	584	696	864	1044	1164	1284	1476
Length (mm) / No. Elements	348 / 7	W	554	599	608	617	624	682	812	1008	1218	1358	1498	1722
Length (mm) / No. Elements	394 / 8	W	633	684	695	706	714	779	928	1152	1392	1552	1712	1968
Length (mm) / No. Elements	440 / 9	W	712	770	782	794	803	877	1044	1296	1566	1746	1926	2214
Length (mm) / No. Elements	486 / 10	W	791	855	869	882	892	974	1160	1440	1740	1940	2140	2460
Length (mm) / No. Elements	532 / 11	W	870	941	956	970	981	1071	1276	1584	1914	2134	2354	2706
Length (mm) / No. Elements	578 / 12	W	949	1026	1043	1058	1070	1169	1392	1728	2088	2328	2568	2952
Length (mm) / No. Elements	624 / 13	W	1028	1112	1130	1147	1160	1266	1508	1872	2262	2522	2782	3198
Length (mm) / No. Elements	670 / 14	W	1107	1197	1217	1235	1249	1364	1624	2016	2436	2716	2996	3444
Length (mm) / No. Elements	716 / 15	W	1187	1283	1304	1323	1338	1461	1740	2160	2610	2910	3210	3690
Length (mm) / No. Elements	762 / 16	W	1266	1368	1390	1411	1427	1558	1856	2304	2784	3104	3424	3936
Length (mm) / No. Elements	808 / 17	W	1345	1454	1477	1499	1516	1656	1972	2448	2958	3298	3638	4182
Length (mm) / No. Elements	854 / 18	W	1424	1539	1564	1588	1606	1753	2088	2592	3132	3492	3852	4428
Length (mm) / No. Elements	900 / 19	W	1503	1625	1651	1676	1695	1851	2204	2736	3306	3686	4066	4674
Length (mm) / No. Elements	946 / 20	W	1582	1710	1738	1764	1784	1948	2320	2880	3480	3880	4280	4920
Length (mm) / No. Elements	992 / 21	W	1661	1796	1825	1852	1873	2045	2436	3024	3654	4074	-	-
Length (mm) / No. Elements	1038 / 22	W	1740	1881	1912	1940	1962	2143	2552	3168	3828	4268	-	-
Length (mm) / No. Elements	1084 / 23	W	1819	1967	1999	2029	2052	2240	2668	3312	4002	4462	-	-
Length (mm) / No. Elements	1130 / 24	W	1898	2052	2086	2117	2141	2338	2784	3456	4176	4656	-	-
Length (mm) / No. Elements	1176 / 25	W	1978	2138	2173	2205	2230	2435	2900	3600	-	-	-	-
Length (mm) / No. Elements	1222 / 26	W	2057	2223	2259	2293	2319	2532	3016	3744	-	-	-	-
Length (mm) / No. Elements	1268 / 27	W	2136	2309	2346	2381	2408	2630	3132	3888	-	-	-	-
Length (mm) / No. Elements	1314 / 28	W	2215	2394	2433	2470	2498	2727	3248	4032	-	-	-	-
Length (mm) / No. Elements	1360 / 29	W	2294	2480	2520	2558	2587	2825	3364	4176	-	-	-	-
Length (mm) / No. Elements	1406 / 30	W	2373	2565	2607	2646	2676	2922	3480	4320	-	-	-	-
Length (mm) / No. Elements	1452 / 31	W	2452	2651	2694	2734	2765	3019	-	-	-	-	-	-
Length (mm) / No. Elements	1498 / 32	W	2531	2736	2781	2822	2854	3117	-	-	-	-	-	-
Length (mm) / No. Elements	1544 / 33	W	2610	2822	2868	2911	2944	3214	-	-	-	-	-	-
Length (mm) / No. Elements	1590 / 34	W	2689	2907	2955	2999	3033	3312	-	-	-	-	-	-
Length (mm) / No. Elements	1636 / 35	W	2769	2993	3042	3087	3122	3409	-	-	-	-	-	-
Length (mm) / No. Elements	1682 / 36	W	2848	3078	3128	3175	3211	3506	-	-	-	-	-	-
Length (mm) / No. Elements	1728 / 37	W	2927	3164	3215	3263	3300	3604	-	-	-	-	-	-
Length (mm) / No. Elements	1774 / 38	W	3006	3249	3302	3352	3390	3701	-	-	-	-	-	-
Length (mm) / No. Elements	1820 / 39	W	3085	3335	3389	3440	3479	3799	-	-	-	-	-	-
Length (mm) / No. Elements	1866 / 40	W	3164	3420	3476	3528	3568	3896	-	-	-	-	-	-

Multicolonna 4 Columns

Image for illustrative purposes only

Technical specifications

Material: UNI EN 10130:2007 steel
Round vertical tubes, diameter 25 mm
Element width: 46 mm
Laser-welded manifolds
Manifold thread 1"1/4 G rhs or lhs
Working pressure 10 bar
Test pressure 13 bar
Maximum operating temperature 110° C

Dimensions are in millimeters (mm)

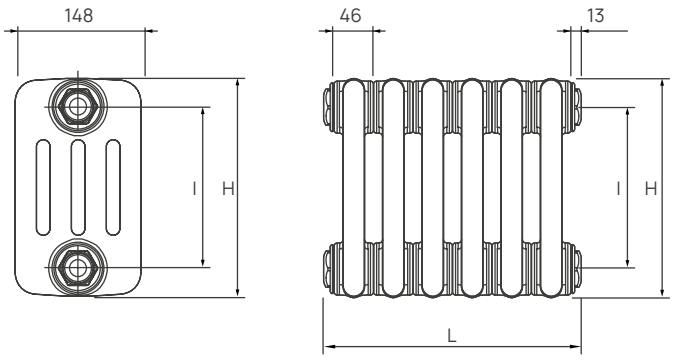

H: height
I : pipe centre (H-70)
L: length with bungs fitted (no. elements x 46) + 26

4 Columns

Multicolonna

Height	Code	Pipe centre	Empty weight	Capacity	Elements	Output Δt 50°C	Output Δt 42,5°C	Output Δt 30°C	Output Δt 20°C	Esp.
H (mm)	Standard configuration	I (mm)	Kg	L	Max no.	W	W	W	W	N.
* 300	0Q0040300ee0000	230	0,9	0,8	40	42,3	34,5	22,3	13,4	1,252
* 400	0Q0040400ee0000	L 330	1,2	0,9	40	55,5	45,2	29,2	17,5	1,257
* 500	0Q0040500ee0000	L 430	1,5	1,1	40	68,3	55,7	35,8	21,5	1,263
510	0Q0040510ee0000	440	1,5	1,1	40	69,6	56,7	36,5	21,9	1,263
* 550	0Q0040550ee0000	480	1,6	1,2	40	74,7	60,8	39 ,1	23,4	1,265
570	0Q0040570ee0000	A 500	1,7	1,2	40	77,2	62,8	40,4	24,2	1,266
* 600	0Q0040600ee0000	L 530	1,8	1,2	40	81,1	66,0	42,4	25,4	1,268
610	0Q0040610ee0000	540	1,8	1,2	40	82,3	67,0	43,1	25,7	1,269
670	0Q0040670ee0000	A 600	2,0	1,3	40	89,9	73,2	47,0	28,1	1,272
* 685	0Q0040685ee0000	G 615	2,0	1,4	40	91,8	74,8	47,9	28,6	1,273
* 750	0Q0040750ee0000	680	2,2	1,5	40	100,0	81,2	52 ,1	31,1	1,276
770	0Q0040770ee0000	A 700	2,3	1,5	40	103,0	83,2	53,4	31,8	1,277
800	0Q0040800ee0000	L 730	2,4	1,6	40	106,0	86,4	55,3	33,0	1,279
870	0Q0040870ee0000	A 800	2,4	1,6	40	115,0	92,5	59,9	35,3	1,280
* 885	0Q0040885ee0000	G 815	2,6	1,7	40	117,0	95,2	60,7	36,2	1,284
* 900	0Q0040900ee0000	830	2,6	1,7	40	119,0	96,4	61,7	36,6	1,284
910	0Q0040910ee0000	840	2,6	1,7	40	120,0	97,6	62,3	37,0	1,285
* 1000	0Q0041000ee0000	L 930	2,9	1,9	40	132,0	106,7	68,0	40,4	1,290
* 1200	0Q0041200ee0000	1130	3,5	2,2	30	157,0	126,9	80,7	47,7	1,297
* 1500	0Q0041500ee0000	1430	4,4	2,7	30	194,0	157,4	99,7	58,7	1,308
* 1800	0Q0041800ee0000	1730	5,3	3,1	24	232,0	187,4	119,0	69,4	1,318
* 2000	0Q0042000ee0000	1930	5,8	3,4	24	258,0	208,6	132,0	77,4	1,315
* 2200	0Q0042200ee0000	2130	6,3	3,8	14	284,0	229,2	145,0	85,3	1,311
* 2500	0Q0042500ee0000	2430	7,1	4,2	14	322,0	260,3	166,0	97,4	1,305

A = pipe centre compatible with aluminium radiators
G = pipe centre compatible with cast iron radiators
L = pipe centre compatible with bar radiators
ee = number of elements
* = The indicated codes are NF certified

Standard configuration

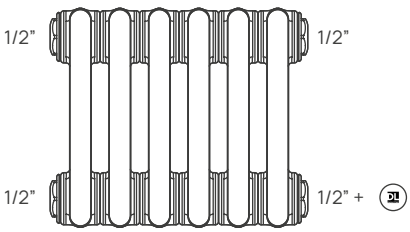

Standard connections and accessories:

In the standard configuration, the Multicolonna radiator is delivered with 4 x 1/2" reducers and 1 x 1/2" blind plug pre-mounted. This configuration is highly versatile as it makes the product fully reversible. Vent and brackets not supplied as standard.

Possible battery lengths:

Welded from 2 to a maximum of 40 elements.
For batteries above the dimensional limit, nippling can be carried out directly on site by ordering the relevant accessories.

4 Columns - Depth 148 mm - Heat outputs at Δt 50 °C - Data table for complete batteries with reducers mounted

Height			300	400	500	510	550	570	600	610	670	685	750	770
Maximum no. of elements			40	40	40	40	40	40	40	40	40	40	40	40
Length (mm) / No. Elements	118 / 2	W	85	111	137	140	149	154	162	165	180	184	200	206
Length (mm) / No. Elements	164 / 3	W	127	167	205	210	224	232	243	247	270	275	300	309
Length (mm) / No. Elements	210 / 4	W	169	222	273	280	299	309	324	329	360	367	400	412
Length (mm) / No. Elements	256 / 5	W	212	278	342	350	374	386	406	412	450	459	500	515
Length (mm) / No. Elements	302 / 6	W	254	333	410	419	448	463	487	494	539	551	600	618
Length (mm) / No. Elements	348 / 7	W	296	389	478	489	523	540	568	576	629	643	700	721
Length (mm) / No. Elements	394 / 8	W	338	444	546	559	598	618	649	658	719	734	800	824
Length (mm) / No. Elements	440 / 9	W	381	500	615	629	672	695	730	741	809	826	900	927
Length (mm) / No. Elements	486 / 10	W	423	555	683	699	747	772	811	823	899	918	1000	1030
Length (mm) / No. Elements	532 / 11	W	465	611	751	769	822	849	892	905	989	1010	1100	1133
Length (mm) / No. Elements	578 / 12	W	508	666	820	839	896	926	973	988	1079	1102	1200	1236
Length (mm) / No. Elements	624 / 13	W	550	722	888	909	971	1004	1054	1070	1169	1193	1300	1339
Length (mm) / No. Elements	670 / 14	W	592	777	956	979	1046	1081	1135	1152	1259	1285	1400	1442
Length (mm) / No. Elements	716 / 15	W	635	833	1025	1049	1121	1158	1217	1235	1349	1377	1500	1545
Length (mm) / No. Elements	762 / 16	W	677	888	1093	1118	1195	1235	1298	1317	1438	1469	1600	1648
Length (mm) / No. Elements	808 / 17	W	719	944	1161	1188	1270	1312	1379	1399	1528	1561	1700	1751
Length (mm) / No. Elements	854 / 18	W	761	999	1229	1258	1345	1390	1460	1481	1618	1652	1800	1854
Length (mm) / No. Elements	900 / 19	W	804	1055	1298	1328	1419	1467	1541	1564	1708	1744	1900	1957
Length (mm) / No. Elements	946 / 20	W	846	1110	1366	1398	1494	1544	1622	1646	1798	1836	2000	2060
Length (mm) / No. Elements	992 / 21	W	888	1166	1434	1468	1569	1621	1703	1728	1888	1928	2100	2163
Length (mm) / No. Elements	1038 / 22	W	931	1221	1503	1538	1643	1698	1784	1811	1978	2020	2200	2266
Length (mm) / No. Elements	1084 / 23	W	973	1277	1571	1608	1718	1776	1865	1893	2068	2111	2300	2369
Length (mm) / No. Elements	1130 / 24	W	1015	1332	1639	1678	1793	1853	1946	1975	2158	2203	2400	2472
Length (mm) / No. Elements	1176 / 25	W	1058	1388	1708	1748	1868	1930	2028	2058	2248	2295	2500	2575
Length (mm) / No. Elements	1222 / 26	W	1100	1443	1776	1817	1942	2007	2109	2140	2337	2387	2600	2678
Length (mm) / No. Elements	1268 / 27	W	1142	1499	1844	1887	2017	2084	2190	2222	2427	2479	2700	2781
Length (mm) / No. Elements	1314 / 28	W	1184	1554	1912	1957	2092	2162	2271	2304	2517	2570	2800	2884
Length (mm) / No. Elements	1360 / 29	W	1227	1610	1981	2027	2166	2239	2352	2387	2607	2662	2900	2987
Length (mm) / No. Elements	1406 / 30	W	1269	1665	2049	2097	2241	2316	2433	2469	2697	2754	3000	3090
Length (mm) / No. Elements	1452 / 31	W	1311	1721	2117	2167	2316	2393	2514	2551	2787	2846	3100	3193
Length (mm) / No. Elements	1498 / 32	W	1354	1776	2186	2237	2390	2470	2595	2634	2877	2938	3200	3296
Length (mm) / No. Elements	1544 / 33	W	1396	1832	2254	2307	2465	2548	2676	2716	2967	3029	3300	3399
Length (mm) / No. Elements	1590 / 34	W	1438	1887	2322	2377	2540	2625	2757	2798	3057	3121	3400	3502
Length (mm) / No. Elements	1636 / 35	W	1481	1943	2391	2447	2615	2702	2839	2881	3147	3213	3500	3605
Length (mm) / No. Elements	1682 / 36	W	1523	1998	2459	2516	2689	2779	2920	2963	3236	3305	3600	3708
Length (mm) / No. Elements	1728 / 37	W	1565	2054	2527	2586	2764	2856	3001	3045	3326	3397	3700	3811
Length (mm) / No. Elements	1774 / 38	W	1607	2109	2595	2656	2839	2934	3082	3127	3416	3488	3800	3914
Length (mm) / No. Elements	1820 / 39	W	1650	2165	2664	2726	2913	3011	3163	3210	3506	3580	3900	4017
Length (mm) / No. Elements	1866 / 40	W	1692	2220	2732	2796	2988	3088	3244	3292	3596	3672	4000	4120

4 Columns - Depth 148 mm - Heat outputs at Δt 50 °C - Data table for complete batteries with reducers mounted

Height			800	870	885	900	910	1000	1200	1500	1800	2000	2200	2500
Maximum no. of elements			40	40	40	40	40	40	30	30	24	24	14	14
Length (mm) / No. Elements	118 / 2	W	212	230	234	238	240	264	314	388	464	516	568	644
Length (mm) / No. Elements	164 / 3	W	318	345	351	357	360	396	471	582	696	774	852	966
Length (mm) / No. Elements	210 / 4	W	424	460	468	476	480	528	628	776	928	1032	1136	1288
Length (mm) / No. Elements	256 / 5	W	530	575	585	595	600	660	785	970	1160	1290	1420	1610
Length (mm) / No. Elements	302 / 6	W	636	690	702	714	720	792	942	1164	1392	1548	1704	1932
Length (mm) / No. Elements	348 / 7	W	742	805	819	833	840	924	1099	1358	1624	1806	1988	2254
Length (mm) / No. Elements	394 / 8	W	848	920	936	952	960	1056	1256	1552	1856	2064	2272	2576
Length (mm) / No. Elements	440 / 9	W	954	1035	1053	1071	1080	1188	1413	1746	2088	2322	2556	2898
Length (mm) / No. Elements	486 / 10	W	1060	1150	1170	1190	1200	1320	1570	1940	2320	2580	2840	3220
Length (mm) / No. Elements	532 / 11	W	1166	1265	1287	1309	1320	1452	1727	2134	2552	2838	3124	3542
Length (mm) / No. Elements	578 / 12	W	1272	1380	1404	1428	1440	1584	1884	2328	2784	3096	3408	3864
Length (mm) / No. Elements	624 / 13	W	1378	1495	1521	1547	1560	1716	2041	2522	3016	3354	3692	4186
Length (mm) / No. Elements	670 / 14	W	1484	1610	1638	1666	1680	1848	2198	2716	3248	3612	3976	4508
Length (mm) / No. Elements	716 / 15	W	1590	1725	1755	1785	1800	1980	2355	2910	3480	3870	-	-
Length (mm) / No. Elements	762 / 16	W	1696	1840	1872	1904	1920	2112	2512	3104	3712	4128	-	-
Length (mm) / No. Elements	808 / 17	W	1802	1955	1989	2023	2040	2244	2669	3298	3944	4386	-	-
Length (mm) / No. Elements	854 / 18	W	1908	2070	2106	2142	2160	2376	2826	3492	4176	4644	-	-
Length (mm) / No. Elements	900 / 19	W	2014	2185	2223	2261	2280	2508	2983	3686	4408	4902	-	-
Length (mm) / No. Elements	946 / 20	W	2120	2300	2340	2380	2400	2640	3140	3880	4640	5160	-	-
Length (mm) / No. Elements	992 / 21	W	2226	2415	2457	2499	2520	2772	3297	4074	4872	5418	-	-
Length (mm) / No. Elements	1038 / 22	W	2332	2530	2574	2618	2640	2904	3454	4268	5104	5676	-	-
Length (mm) / No. Elements	1084 / 23	W	2438	2645	2691	2737	2760	3036	3611	4462	5336	5934	-	-
Length (mm) / No. Elements	1130 / 24	W	2544	2760	2808	2856	2880	3168	3768	4656	5568	6192	-	-
Length (mm) / No. Elements	1176 / 25	W	2650	2875	2925	2975	3000	3300	3925	4850	-	-	-	-
Length (mm) / No. Elements	1222 / 26	W	2756	2990	3042	3094	3120	3432	4082	5044	-	-	-	-
Length (mm) / No. Elements	1268 / 27	W	2862	3105	3159	3213	3240	3564	4239	5238	-	-	-	-
Length (mm) / No. Elements	1314 / 28	W	2968	3220	3276	3332	3360	3696	4396	5432	-	-	-	-
Length (mm) / No. Elements	1360 / 29	W	3074	3335	3393	3451	3480	3828	4553	5626	-	-	-	-
Length (mm) / No. Elements	1406 / 30	W	3180	3450	3510	3570	3600	3960	4710	5820	-	-	-	-
Length (mm) / No. Elements	1452 / 31	W	3286	3565	3627	3689	3720	4092	-	-	-	-	-	-
Length (mm) / No. Elements	1498 / 32	W	3392	3680	3744	3808	3840	4224	-	-	-	-	-	-
Length (mm) / No. Elements	1544 / 33	W	3498	3795	3861	3927	3960	4356	-	-	-	-	-	-
Length (mm) / No. Elements	1590 / 34	W	3604	3910	3978	4046	4080	4488	-	-	-	-	-	-
Length (mm) / No. Elements	1636 / 35	W	3710	4025	4095	4165	4200	4620	-	-	-	-	-	-
Length (mm) / No. Elements	1682 / 36	W	3816	4140	4212	4284	4320	4752	-	-	-	-	-	-
Length (mm) / No. Elements	1728 / 37	W	3922	4255	4329	4403	4440	4884	-	-	-	-	-	-
Length (mm) / No. Elements	1774 / 38	W	4028	4370	4446	4522	4560	5016	-	-	-	-	-	-
Length (mm) / No. Elements	1820 / 39	W	4134	4485	4563	4641	4680	5148	-	-	-	-	-	-
Length (mm) / No. Elements	1866 / 40	W	4240	4600	4680	4760	4800	5280	-	-	-	-	-	-

Multicolonna 5 Columns

Image for illustrative purposes only

Technical specifications

Material: UNI EN 10130:2007 steel
Round vertical tubes, diameter 25 mm
Element width: 46 mm
Laser-welded manifolds
Manifold thread 1"1/4 G rhs or lhs
Working pressure 10 bar
Test pressure 13 bar
Maximum operating temperature 110° C

Dimensions are in millimeters (mm)

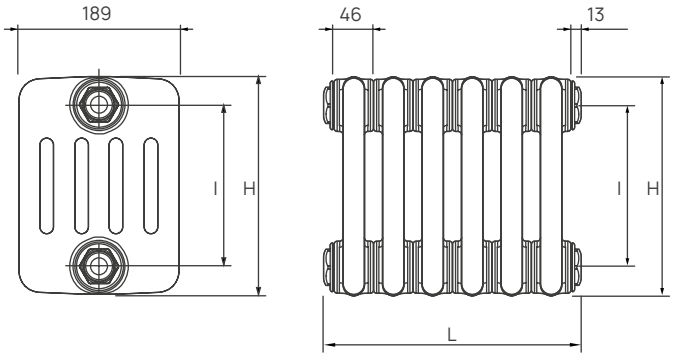

H: height
I : pipe centre (H-70)
L: length with bungs fitted (no. elements x 46) + 26

5 Columns

Multicolonna

Height	Code	Pipe centre	Empty weight	Capacity	Elements	Output Δt 50°C	Output Δt 42,5°C	Output Δt 30°C	Output Δt 20°C	Esp.
H (mm)	Standard configuration	I (mm)	Kg	L	Max no.	W	W	W	W	N.
* 300	0Q0050300ee0000	230	1,2	1,0	40	51,9	42,4	27,4	16,5	1,253
* 400	0Q0050400ee0000	L 330	1,6	1,2	40	67,2	54,7	35,3	21,2	1,261
* 500	0Q0050500ee0000	L 430	1,9	1,4	40	82,2	67,0	43,0	25,7	1,270
570	0Q0050570ee0000	A 500	2,2	1,5	40	92,6	75,4	48,2	28,8	1,276
* 600	0Q0050600ee0000	L 530	2,3	1,6	40	97,0	78,8	50,5	30,1	1,278
670	0Q0050670ee0000	A 600	2,5	1,7	40	107,0	87,2	55,7	33,1	1,284
* 685	0Q0050685ee0000	G 615	2,7	1,7	40	110,0	88,8	56,8	33,7	1,285
* 750	0Q0050750ee0000	680	2,8	1,8	40	119,0	96,6	61,5	36,5	1,291
770	0Q0050770ee0000	A 700	2,9	1,8	40	122,0	99 ,1	63,0	37,4	1,293
800	0Q0050800ee0000	L 730	3 ,1	1,9	40	126,0	102,9	65,2	38,8	1,295
870	0Q0050870ee0000	A 800	3,3	1,9	40	137,0	110,5	70,2	41,4	1,301
* 885	0Q0050885ee0000	G 815	3,4	2,1	40	139,0	112,3	71,3	42,1	1,302
* 900	0Q0050900ee0000	830	3,5	2 ,1	40	141,0	113,9	72,4	42,7	1,303
* 1000	0Q0051000ee0000	L 930	3,7	2,3	40	155,0	125,8	79,5	46,8	1,312
* 1200	0Q0051200ee0000	1130	4,4	2,7	25	184,0	148,9	94,0	55,1	1,320
* 1500	0Q0051500ee0000	1430	5,5	3,3	25	228,0	183,7	116,0	67,3	1,332
* 1800	0Q0051800ee0000	1730	6,5	3,9	15	273,0	219,4	137,0	79,6	1,345
* 2000	0Q0052000ee0000	1930	7,2	4,3	15	303,0	243,5	153,0	88,8	1,338
* 2200	0Q0052200ee0000	2130	7,9	4,7	12	333,0	268,9	169,0	98,5	1,332
* 2500	0Q0052500ee0000	2430	9,0	5,3	12	380,0	306,8	193,0	113,3	1,322

A = pipe centre compatible with aluminium radiators
G = pipe centre compatible with cast iron radiators
L = pipe centre compatible with bar radiators
ee = number of elements
* = The indicated codes are NF certified

Standard configuration

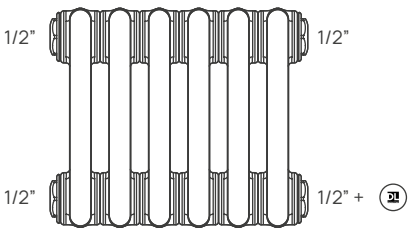

Standard connections and accessories:

In the standard configuration, the Multicolonna radiator is delivered with 4 x 1/2" reducers and 1 x 1/2" blind plug pre-mounted. This configuration is highly versatile as it makes the product fully reversible. Vent and brackets not supplied as standard.

Possible battery lengths:

Welded from 2 to a maximum of 40 elements.
For batteries above the dimensional limit, nippling can be carried out directly on site by ordering the relevant accessories.

5 Columns - Depth 189 mm - Heat outputs at Δt 50 °C - Data table for complete batteries with reducers mounted

Height			300	400	500	570	600	670	685	750	770	800
Maximum no. of elements			40	40	40	40	40	40	40	40	40	40
Length (mm) / No. Elements	118 / 2	W	104	134	164	185	194	214	220	238	244	252
Length (mm) / No. Elements	164 / 3	W	156	202	247	278	291	321	330	357	366	378
Length (mm) / No. Elements	210 / 4	W	208	269	329	370	388	428	440	476	488	504
Length (mm) / No. Elements	256 / 5	W	260	336	411	463	485	535	550	595	610	630
Length (mm) / No. Elements	302 / 6	W	311	403	493	556	582	642	660	714	732	756
Length (mm) / No. Elements	348 / 7	W	363	470	575	648	679	749	770	833	854	882
Length (mm) / No. Elements	394 / 8	W	415	538	658	741	776	856	880	952	976	1008
Length (mm) / No. Elements	440 / 9	W	467	605	740	833	873	963	990	1071	1098	1134
Length (mm) / No. Elements	486 / 10	W	519	672	822	926	970	1070	1100	1190	1220	1260
Length (mm) / No. Elements	532 / 11	W	571	739	904	1019	1067	1177	1210	1309	1342	1386
Length (mm) / No. Elements	578 / 12	W	623	806	986	1111	1164	1284	1320	1428	1464	1512
Length (mm) / No. Elements	624 / 13	W	675	874	1069	1204	1261	1391	1430	1547	1586	1638
Length (mm) / No. Elements	670 / 14	W	727	941	1151	1296	1358	1498	1540	1666	1708	1764
Length (mm) / No. Elements	716 / 15	W	779	1008	1233	1389	1455	1605	1650	1785	1830	1890
Length (mm) / No. Elements	762 / 16	W	830	1075	1315	1482	1552	1712	1760	1904	1952	2016
Length (mm) / No. Elements	808 / 17	W	882	1142	1397	1574	1649	1819	1870	2023	2074	2142
Length (mm) / No. Elements	854 / 18	W	934	1210	1480	1667	1746	1926	1980	2142	2196	2268
Length (mm) / No. Elements	900 / 19	W	986	1277	1562	1759	1843	2033	2090	2261	2318	2394
Length (mm) / No. Elements	946 / 20	W	1038	1344	1644	1852	1940	2140	2200	2380	2440	2520
Length (mm) / No. Elements	992 / 21	W	1090	1411	1726	1945	2037	2247	2310	2499	2562	2646
Length (mm) / No. Elements	1038 / 22	W	1142	1478	1808	2037	2134	2354	2420	2618	2684	2772
Length (mm) / No. Elements	1084 / 23	W	1194	1546	1891	2130	2231	2461	2530	2737	2806	2898
Length (mm) / No. Elements	1130 / 24	W	1246	1613	1973	2222	2328	2568	2640	2856	2928	3024
Length (mm) / No. Elements	1176 / 25	W	1298	1680	2055	2315	2425	2675	2750	2975	3050	3150
Length (mm) / No. Elements	1222 / 26	W	1349	1747	2137	2408	2522	2782	2860	3094	3172	3276
Length (mm) / No. Elements	1268 / 27	W	1401	1814	2219	2500	2619	2889	2970	3213	3294	3402
Length (mm) / No. Elements	1314 / 28	W	1453	1882	2302	2593	2716	2996	3080	3332	3416	3528
Length (mm) / No. Elements	1360 / 29	W	1505	1949	2384	2685	2813	3103	3190	3451	3538	3654
Length (mm) / No. Elements	1406 / 30	W	1557	2016	2466	2778	2910	3210	3300	3570	3660	3780
Length (mm) / No. Elements	1452 / 31	W	1609	2083	2548	2871	3007	3317	3410	3689	3782	3906
Length (mm) / No. Elements	1498 / 32	W	1661	2150	2630	2963	3104	3424	3520	3808	3904	4032
Length (mm) / No. Elements	1544 / 33	W	1713	2218	2713	3056	3201	3531	3630	3927	4026	4158
Length (mm) / No. Elements	1590 / 34	W	1765	2285	2795	3148	3298	3638	3740	4046	4148	4284
Length (mm) / No. Elements	1636 / 35	W	1817	2352	2877	3241	3395	3745	3850	4165	4270	4410
Length (mm) / No. Elements	1682 / 36	W	1868	2419	2959	3334	3492	3852	3960	4284	4392	4536
Length (mm) / No. Elements	1728 / 37	W	1920	2486	3041	3426	3589	3959	4070	4403	4514	4662
Length (mm) / No. Elements	1774 / 38	W	1972	2554	3124	3519	3686	4066	4180	4522	4636	4788
Length (mm) / No. Elements	1820 / 39	W	2024	2621	3206	3611	3783	4173	4290	4641	4758	4914
Length (mm) / No. Elements	1866 / 40	W	2076	2688	3288	3704	3880	4280	4400	4760	4880	5040

5 Columns - Depth 189 mm - Heat outputs at Δt 50 °C - Data table for complete batteries with reducers mounted

Height			870	885	900	1000	1200	1500	1800	2000	2200	2500
Maximum no. of elements			40	40	40	40	25	25	15	15	12	12
Length (mm) / No. Elements	118 / 2	W	274	278	282	310	368	456	546	606	666	760
Length (mm) / No. Elements	164 / 3	W	411	417	423	465	552	684	819	909	999	1140
Length (mm) / No. Elements	210 / 4	W	548	556	564	620	736	912	1092	1212	1332	1520
Length (mm) / No. Elements	256 / 5	W	685	695	705	775	920	1140	1365	1515	1665	1900
Length (mm) / No. Elements	302 / 6	W	822	834	846	930	1104	1368	1638	1818	1998	2280
Length (mm) / No. Elements	348 / 7	W	959	973	987	1085	1288	1596	1911	2121	2331	2660
Length (mm) / No. Elements	394 / 8	W	1096	1112	1128	1240	1472	1824	2184	2424	2664	3040
Length (mm) / No. Elements	440 / 9	W	1233	1251	1269	1395	1656	2052	2457	2727	2997	3420
Length (mm) / No. Elements	486 / 10	W	1370	1390	1410	1550	1840	2280	2730	3030	3330	3800
Length (mm) / No. Elements	532 / 11	W	1507	1529	1551	1705	2024	2508	3003	3333	3663	4180
Length (mm) / No. Elements	578 / 12	W	1644	1668	1692	1860	2208	2736	3276	3636	3996	4560
Length (mm) / No. Elements	624 / 13	W	1781	1807	1833	2015	2392	2964	3549	3939	-	-
Length (mm) / No. Elements	670 / 14	W	1918	1946	1974	2170	2576	3192	3822	4242	-	-
Length (mm) / No. Elements	716 / 15	W	2055	2085	2115	2325	2760	3420	4095	4545	-	-
Length (mm) / No. Elements	762 / 16	W	2192	2224	2256	2480	2944	3648	-	-	-	-
Length (mm) / No. Elements	808 / 17	W	2329	2363	2397	2635	3128	3876	-	-	-	-
Length (mm) / No. Elements	854 / 18	W	2466	2502	2538	2790	3312	4104	-	-	-	-
Length (mm) / No. Elements	900 / 19	W	2603	2641	2679	2945	3496	4332	-	-	-	-
Length (mm) / No. Elements	946 / 20	W	2740	2780	2820	3100	3680	4560	-	-	-	-
Length (mm) / No. Elements	992 / 21	W	2877	2919	2961	3255	3864	4788	-	-	-	-
Length (mm) / No. Elements	1038 / 22	W	3014	3058	3102	3410	4048	5016	-	-	-	-
Length (mm) / No. Elements	1084 / 23	W	3151	3197	3243	3565	4232	5244	-	-	-	-
Length (mm) / No. Elements	1130 / 24	W	3288	3336	3384	3720	4416	5472	-	-	-	-
Length (mm) / No. Elements	1176 / 25	W	3425	3475	3525	3875	4600	5700	-	-	-	-
Length (mm) / No. Elements	1222 / 26	W	3562	3614	3666	4030	-	-	-	-	-	-
Length (mm) / No. Elements	1268 / 27	W	3699	3753	3807	4185	-	-	-	-	-	-
Length (mm) / No. Elements	1314 / 28	W	3836	3892	3948	4340	-	-	-	-	-	-
Length (mm) / No. Elements	1360 / 29	W	3973	4031	4089	4495	-	-	-	-	-	-
Length (mm) / No. Elements	1406 / 30	W	4110	4170	4230	4650	-	-	-	-	-	-
Length (mm) / No. Elements	1452 / 31	W	4247	4309	4371	4805	-	-	-	-	-	-
Length (mm) / No. Elements	1498 / 32	W	4384	4448	4512	4960	-	-	-	-	-	-
Length (mm) / No. Elements	1544 / 33	W	4521	4587	4653	5115	-	-	-	-	-	-
Length (mm) / No. Elements	1590 / 34	W	4658	4726	4794	5270	-	-	-	-	-	-
Length (mm) / No. Elements	1636 / 35	W	4795	4865	4935	5425	-	-	-	-	-	-
Length (mm) / No. Elements	1682 / 36	W	4932	5004	5076	5580	-	-	-	-	-	-
Length (mm) / No. Elements	1728 / 37	W	5069	5143	5217	5735	-	-	-	-	-	-
Length (mm) / No. Elements	1774 / 38	W	5206	5282	5358	5890	-	-	-	-	-	-
Length (mm) / No. Elements	1820 / 39	W	5343	5421	5499	6045	-	-	-	-	-	-
Length (mm) / No. Elements	1866 / 40	W	5480	5560	5640	6200	-	-	-	-	-	-

Multicolonna 6 Columns

Image for illustrative purposes only

Technical specifications

Material: UNI EN 10130:2007 steel
Round vertical tubes, diameter 25 mm
Element width: 46 mm
Laser-welded manifolds
Manifold thread 1"1/4 G rhs or lhs
Working pressure 10 bar
Test pressure 13 bar
Maximum operating temperature 110° C

Dimensions are in millimeters (mm)

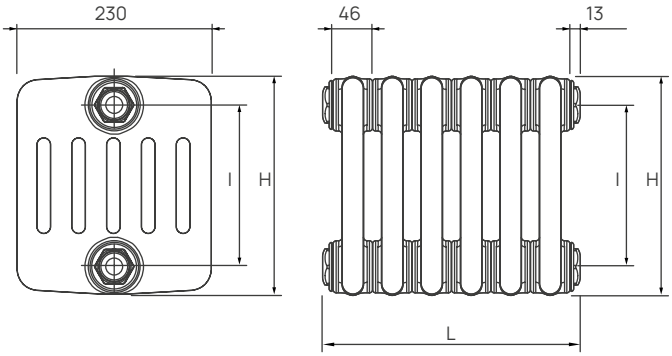

H: height
I : pipe centre (H-70)
L: length with bungs fitted (no. elements x 46) + 26

6 Columns

Multicolonna

Height	Code	Pipe centre	Empty weight	Capacity	Elements	Output Δt 50°C	Output Δt 42,5°C	Output Δt 30°C	Output Δt 20°C	Esp.
H (mm)	Standard configuration	I (mm)	Kg	L	Max no.	W	W	W	W	N.
* 300	0Q0060300ee0000	230	1,5	1,1	40	62,3	50,7	32,7	19,6	1,262
* 400	0Q0060400ee0000	L 330	1,9	1,3	40	81,0	65,8	42,3	25,3	1,270
* 500	0Q0060500ee0000	L 430	2,3	1,6	40	99,4	80,6	51,7	30,8	1,278
570	0Q0060570ee0000	A 500	2,6	1,7	40	112,0	91,3	58,2	34,7	1,285
* 600	0Q0060600ee0000	L 530	2,7	1,8	40	117,0	95,5	60,9	36,2	1,287
670	0Q0060670ee0000	A 600	3,0	2,0	40	130,0	105,7	67,2	39,9	1,293
* 685	0Q0060685ee0000	G 615	3,2	2,0	40	133,0	107,8	68,6	40,6	1,294
* 750	0Q0060750ee0000	680	3,4	2,2	40	144,0	117,0	74,4	43,9	1,299
770	0Q0060770ee0000	A 700	3,5	2,2	40	148,0	120,0	76,1	45,0	1,301
800	0Q0060800ee0000	L 730	3,8	2,3	40	153,0	124,1	78,8	46,5	1,303
870	0Q0060870ee0000	A 800	3,7	2,3	40	166,0	133,9	84,9	50,0	1,309
* 885	0Q0060885ee0000	815	4 ,1	2,5	40	168,0	136,1	86,2	50,7	1,310
* 900	0Q0060900ee0000	830	4,0	2,5	40	171,0	138,2	87,5	51,4	1,311
* 1000	0Q0061000ee0000	L 930	4,4	2,8	40	189,0	152,1	96,2	56,3	1,319
* 1200	0Q0061200ee0000	1130	5,2	3,3	20	224,0	180,8	114,0	66,8	1,322
* 1500	0Q0061500ee0000	1430	6,5	4,0	20	276,0	222,7	140,0	82,0	1,325
* 1800	0Q0061800ee0000	1730	7,7	4,7	15	329,0	265,4	167,0	97,5	1,329
* 2000	0Q0062000ee0000	1930	8,6	5,2	15	364,0	294,0	185,0	108,0	1,328
* 2200	0Q0062200ee0000	2130	9,5	5,7	10	399,0	321,5	203,0	118,3	1,326
* 2500	0Q0062500ee0000	2430	10,8	6,4	10	452,0	365,4	230,0	134,6	1,325

A = pipe centre compatible with aluminium radiators
G = pipe centre compatible with cast iron radiators
L = pipe centre compatible with bar radiators
ee = number of elements
* = The indicated codes are NF certified

Standard configuration

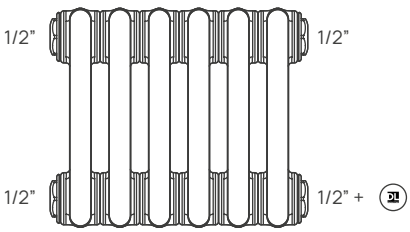

Standard connections and accessories:

In the standard configuration, the Multicolonna radiator is delivered with 4 x 1/2" reducers and 1 x 1/2" blind plug pre-mounted. This configuration is highly versatile as it makes the product fully reversible. Vent and brackets not supplied as standard.

Possible battery lengths:

Welded from 2 to a maximum of 40 elements.
For batteries above the dimensional limit, nippling can be carried out directly on site by ordering the relevant accessories.

6 Columns - Depth 230 mm - Heat outputs at Δt 50 °C - Data table for complete batteries with reducers mounted

Height			300	400	500	570	600	670	685	750	770	800
Maximum no. of elements			40	40	40	40	40	40	40	40	40	40
Length (mm)	118	W	125	162	199	224	234	260	266	288	296	306
No. Elements	2											
Length (mm)	164	W	187	243	298	336	351	390	399	432	444	459
No. Elements	3											
Length (mm)	210	W	249	324	398	448	468	520	532	576	592	612
No. Elements	4											
Length (mm)	256	W	312	405	497	560	585	650	665	720	740	765
No. Elements	5											
Length (mm)	302	W	374	486	596	672	702	780	798	864	888	918
No. Elements	6											
Length (mm)	348	W	436	567	696	784	819	910	931	1008	1036	1071
No. Elements	7											
Length (mm)	394	W	498	648	795	896	936	1040	1064	1152	1184	1224
No. Elements	8											
Length (mm)	440	W	561	729	895	1008	1053	1170	1197	1296	1332	1377
No. Elements	9											
Length (mm)	486	W	623	810	994	1120	1170	1300	1330	1440	1480	1530
No. Elements	10											
Length (mm)	532	W	685	891	1093	1232	1287	1430	1463	1584	1628	1683
No. Elements	11											
Length (mm)	578	W	748	972	1193	1344	1404	1560	1596	1728	1776	1836
No. Elements	12											
Length (mm)	624	W	810	1053	1292	1456	1521	1690	1729	1872	1924	1989
No. Elements	13											
Length (mm)	670	W	872	1134	1392	1568	1638	1820	1862	2016	2072	2142
No. Elements	14											
Length (mm)	716	W	935	1215	1491	1680	1755	1950	1995	2160	2220	2295
No. Elements	15											
Length (mm)	762	W	997	1296	1590	1792	1872	2080	2128	2304	2368	2448
No. Elements	16											
Length (mm)	808	W	1059	1377	1690	1904	1989	2210	2261	2448	2516	2601
No. Elements	17											
Length (mm)	854	W	1121	1458	1789	2016	2106	2340	2394	2592	2664	2754
No. Elements	18											
Length (mm)	900	W	1184	1539	1889	2128	2223	2470	2527	2736	2812	2907
No. Elements	19											
Length (mm)	946	W	1246	1620	1988	2240	2340	2600	2660	2880	2960	3060
No. Elements	20											
Length (mm)	992	W	1308	1701	2087	2352	2457	2730	2793	3024	3108	3213
No. Elements	21											
Length (mm)	1038	W	1371	1782	2187	2464	2574	2860	2926	3168	3256	3366
No. Elements	22											
Length (mm)	1084	W	1433	1863	2286	2576	2691	2990	3059	3312	3404	3519
No. Elements	23											
Length (mm)	1130	W	1495	1944	2386	2688	2808	3120	3192	3456	3552	3672
No. Elements	24											
Length (mm)	1176	W	1558	2025	2485	2800	2925	3250	3325	3600	3700	3825
No. Elements	25											
Length (mm)	1222	W	1620	2106	2584	2912	3042	3380	3458	3744	3848	3978
No. Elements	26											
Length (mm)	1268	W	1682	2187	2684	3024	3159	3510	3591	3888	3996	4131
No. Elements	27											
Length (mm)	1314	W	1744	2268	2783	3136	3276	3640	3724	4032	4144	4284
No. Elements	28											
Length (mm)	1360	W	1807	2349	2883	3248	3393	3770	3857	4176	4292	4437
No. Elements	29											
Length (mm)	1406	W	1869	2430	2982	3360	3510	3900	3990	4320	4440	4590
No. Elements	30											
Length (mm)	1452	W	1931	2511	3081	3472	3627	4030	4123	4464	4588	4743
No. Elements	31											
Length (mm)	1498	W	1994	2592	3181	3584	3744	4160	4256	4608	4736	4896
No. Elements	32											
Length (mm)	1544	W	2056	2673	3280	3696	3861	4290	4389	4752	4884	5049
No. Elements	33											
Length (mm)	1590	W	2118	2754	3380	3808	3978	4420	4522	4896	5032	5202
No. Elements	34											
Length (mm)	1636	W	2181	2835	3479	3920	4095	4550	4655	5040	5180	5355
No. Elements	35											
Length (mm)	1682	W	2243	2916	3578	4032	4212	4680	4788	5184	5328	5508
No. Elements	36											
Length (mm)	1728	W	2305	2997	3678	4144	4329	4810	4921	5328	5476	5661
No. Elements	37											
Length (mm)	1774	W	2367	3078	3777	4256	4446	4940	5054	5472	5624	5814
No. Elements	38											
Length (mm)	1820	W	2430	3159	3877	4368	4563	5070	5187	5616	5772	5967
No. Elements	39											
Length (mm)	1866	W	2492	3240	3976	4480	4680	5200	5320	5760	5920	6120
No. Elements	40											

6 Columns - Depth 230 mm - Heat outputs at Δt 50 °C - Data table for complete batteries with reducers mounted

Height			870	885	900	1000	1200	1500	1800	2000	2200	2500
Maximum no. of elements			40	40	40	40	20	20	15	15	10	10
Length (mm) / No. Elements	118 / 2	W	332	336	342	378	448	552	658	728	798	904
Length (mm) / No. Elements	164 / 3	W	498	504	513	567	672	828	987	1092	1197	1356
Length (mm) / No. Elements	210 / 4	W	664	672	684	756	896	1104	1316	1456	1596	1808
Length (mm) / No. Elements	256 / 5	W	830	840	855	945	1120	1380	1645	1820	1995	2260
Length (mm) / No. Elements	302 / 6	W	996	1008	1026	1134	1344	1656	1974	2184	2394	2712
Length (mm) / No. Elements	348 / 7	W	1162	1176	1197	1323	1568	1932	2303	2548	2793	3164
Length (mm) / No. Elements	394 / 8	W	1328	1344	1368	1512	1792	2208	2632	2912	3192	3616
Length (mm) / No. Elements	440 / 9	W	1494	1512	1539	1701	2016	2484	2961	3276	3591	4068
Length (mm) / No. Elements	486 / 10	W	1660	1680	1710	1890	2240	2760	3290	3640	3990	4520
Length (mm) / No. Elements	532 / 11	W	1826	1848	1881	2079	2464	3036	3619	4004	-	-
Length (mm) / No. Elements	578 / 12	W	1992	2016	2052	2268	2688	3312	3948	4368	-	-
Length (mm) / No. Elements	624 / 13	W	2158	2184	2223	2457	2912	3588	4277	4732	-	-
Length (mm) / No. Elements	670 / 14	W	2324	2352	2394	2646	3136	3864	4606	5096	-	-
Length (mm) / No. Elements	716 / 15	W	2490	2520	2565	2835	3360	4140	4935	5460	-	-
Length (mm) / No. Elements	762 / 16	W	2656	2688	2736	3024	3584	4416	-	-	-	-
Length (mm) / No. Elements	808 / 17	W	2822	2856	2907	3213	3808	4692	-	-	-	-
Length (mm) / No. Elements	854 / 18	W	2988	3024	3078	3402	4032	4968	-	-	-	-
Length (mm) / No. Elements	900 / 19	W	3154	3192	3249	3591	4256	5244	-	-	-	-
Length (mm) / No. Elements	946 / 20	W	3320	3360	3420	3780	4480	5520	-	-	-	-
Length (mm) / No. Elements	992 / 21	W	3486	3528	3591	3969	-	-	-	-	-	-
Length (mm) / No. Elements	1038 / 22	W	3652	3696	3762	4158	-	-	-	-	-	-
Length (mm) / No. Elements	1084 / 23	W	3818	3864	3933	4347	-	-	-	-	-	-
Length (mm) / No. Elements	1130 / 24	W	3984	4032	4104	4536	-	-	-	-	-	-
Length (mm) / No. Elements	1176 / 25	W	4150	4200	4275	4725	-	-	-	-	-	-
Length (mm) / No. Elements	1222 / 26	W	4316	4368	4446	4914	-	-	-	-	-	-
Length (mm) / No. Elements	1268 / 27	W	4482	4536	4617	5103	-	-	-	-	-	-
Length (mm) / No. Elements	1314 / 28	W	4648	4704	4788	5292	-	-	-	-	-	-
Length (mm) / No. Elements	1360 / 29	W	4814	4872	4959	5481	-	-	-	-	-	-
Length (mm) / No. Elements	1406 / 30	W	4980	5040	5130	5670	-	-	-	-	-	-
Length (mm) / No. Elements	1452 / 31	W	5146	5208	5301	5859	-	-	-	-	-	-
Length (mm) / No. Elements	1498 / 32	W	5312	5376	5472	6048	-	-	-	-	-	-
Length (mm) / No. Elements	1544 / 33	W	5478	5544	5643	6237	-	-	-	-	-	-
Length (mm) / No. Elements	1590 / 34	W	5644	5712	5814	6426	-	-	-	-	-	-
Length (mm) / No. Elements	1636 / 35	W	5810	5880	5985	6615	-	-	-	-	-	-
Length (mm) / No. Elements	1682 / 36	W	5976	6048	6156	6804	-	-	-	-	-	-
Length (mm) / No. Elements	1728 / 37	W	6142	6216	6327	6993	-	-	-	-	-	-
Length (mm) / No. Elements	1774 / 38	W	6308	6384	6498	7182	-	-	-	-	-	-
Length (mm) / No. Elements	1820 / 39	W	6474	6552	6669	7371	-	-	-	-	-	-
Length (mm) / No. Elements	1866 / 40	W	6640	6720	6840	7560	-	-	-	-	-	-

Multicolonna Hygiene

Immagine a scopo illustrativo

Technical specifications

Material: UNI EN 10130:2007 steel
Round vertical tubes, diameter 25 mm
Element width: 66 mm
Laser-welded manifolds
Manifold thread 1"1/4 G rhs or lhs
Working pressure 10 bar
Test pressure 13 bar
Maximum operating temperature 110° C

Dimensions are in millimeters (mm)

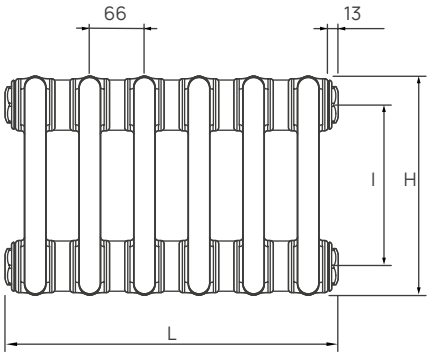

H: height
I : pipe centre (H-70)
L: length with bungs fitted (no. elements x 66) + 6

Multicolonna Hygiene

Columns	Height	Code	Pipe centre	Max Elements	Empty weight	Capacity	Output Δt50°C		Output Δt42,5°C	Output Δt30°C	Output Δt20°C	Esp.
	H (mm)	Standard configu-ration	I (mm)	N.	Kg	L	W	Kcal/h	W	W	W	N.
2	500	0Q0H20500ee0000	430	40	0,9	0,7	41,0	35,3	30,9	21,5	12,5	1,265
	600	0Q0H20600ee0000	530	40	1,0	0,8	47,8	41,1	36,1	25,2	14,7	1,254
	685	0Q0H20685ee0000	615	40	1,1	0,8	54,1	46,5	40,8	28,4	16,6	1,260
	885	0Q0H20885ee0000	815	40	1,5	1,0	69,9	60,1	52,7	36,7	21,4	1,262
	900	0Q0H20900ee0000	830	40	1,5	1,0	71,1	61,1	53,6	37,3	21,8	1,262
	1000	0Q0H21000ee0000	930	40	1,6	1,1	79,2	68,1	59,8	41,7	24,4	1,257
	1500	0Q0H21500ee0000	1430	20	2,3	1,5	119,3	102,6	89,5	61,7	35,6	1,290
	1800	0Q0H21800ee0000	1730	20	2,7	1,7	144,2	124,0	107,7	73,9	42,3	1,309
	2000	0Q0H22000ee0000	1930	20	3,0	1,8	162,2	139,5	121,1	83,1	47,5	1,309
3	500	0Q0H30500ee0000	430	40	1,3	0,9	55,7	47,9	42,1	29,3	17,1	1,257
	600	0Q0H30600ee0000	530	40	1,5	1,0	65,0	55,9	49,2	34,4	20,2	1,246
	685	0Q0H30685ee0000	615	40	1,7	1,2	73,3	63,0	55,4	38,7	22,7	1,252
	885	0Q0H30885ee0000	815	40	2,2	1,4	94,5	81,3	71,4	49,7	29,0	1,259
	900	0Q0H30900ee0000	830	40	2,2	1,4	96,1	82,6	72,6	50,5	29,5	1,259
	1000	0Q0H31000ee0000	930	40	2,4	1,5	107,0	92,0	80,6	56,0	32,6	1,268
	1500	0Q0H31500ee0000	1430	20	3,4	2,1	161,6	139,0	121,5	84,1	48,7	1,279
	1800	0Q0H31800ee0000	1730	20	4,1	2,4	196,2	168,7	147,1	101,5	58,5	1,290
	2000	0Q0H32000ee0000	1930	20	4,5	2,6	220,8	189,9	165,6	114,2	65,9	1,290
4	500	0Q0H40500ee0000	430	40	1,6	1,2	73,7	63,4	55,7	38,8	22,7	1,256
	600	0Q0H40600ee0000	530	40	1,9	1,3	86,8	74,6	65,7	45,8	26,9	1,251
	685	0Q0H40685ee0000	615	34	2,1	1,5	98,2	84,4	74,2	51,7	30,2	1,257
	885	0Q0H40885ee0000	815	34	2,7	1,8	127,3	109,5	95,9	66,5	38,7	1,270
	900	0Q0H40900ee0000	830	34	2,7	1,8	129,6	111,4	97,6	67,7	39,4	1,271
	1000	0Q0H41000ee0000	930	34	3,0	2,0	144,7	124,4	108,7	75,2	43,5	1,281
	1500	0Q0H41500ee0000	1430	20	4,5	2,8	217,6	187,1	162,1	110,9	63,2	1,319
	1800	0Q0H41800ee0000	1730	20	5,4	3,2	262,4	225,6	194,6	132,4	74,8	1,339
	2000	0Q0H42000ee0000	1930	20	5,9	3,5	293,9	252,7	218,4	149,0	84,4	1,330
5	500	0Q0H50500ee0000	430	38	2,0	1,5	87,9	75,6	66,5	46,5	27,3	1,247
	600	0Q0H50600ee0000	530	38	2,4	1,7	103,8	89,3	78,5	54,8	32,1	1,250
	685	0Q0H50685ee0000	615	31	2,7	1,8	117,1	100,7	88,5	61,7	36,1	1,255
	885	0Q0H50885ee0000	815	31	3,4	2,2	151,0	129,8	113,7	78,9	45,9	1,271
	900	0Q0H50900ee0000	830	31	3,4	2,2	153,6	132,1	115,6	80,2	46,6	1,272
	1000	0Q0H51000ee0000	930	31	3,8	2,4	170,9	146,9	128,7	89,3	51,9	1,270
	1500	0Q0H51500ee0000	1430	17	5,6	3,4	255,9	220,0	192,3	133,0	77,0	1,281
	1800	0Q0H51800ee0000	1730	15	6,6	4,0	308,4	265,2	231,8	160,4	92,9	1,280
	2000	0Q0H52000ee0000	1930	15	7,3	4,4	345,2	296,8	259,5	179,6	104,0	1,279
6	500	0Q0H60500ee0000	430	34	2,4	1,7	106,5	91,6	80,2	55,6	32,3	1,272
	600	0Q0H60600ee0000	530	34	2,8	1,9	125,7	108,1	94,9	66,0	38,5	1,261
	685	0Q0H60685ee0000	615	27	3,1	2,1	142,1	122,2	107,0	74,2	43,1	1,273
	885	0Q0H60885ee0000	815	27	4,0	2,6	183,1	157,4	137,3	94,8	54,7	1,289
	900	0Q0H60900ee0000	830	27	4,1	2,6	186,3	160,2	139,7	96,4	55,6	1,290
	1000	0Q0H61000ee0000	930	27	4,5	2,9	207,6	178,5	155,3	106,8	61,3	1,301
	1500	0Q0H61500ee0000	1430	13	6,6	4,1	309,4	266,0	230,0	156,9	89,0	1,329
	1800	0Q0H61800ee0000	1730	13	7,8	4,8	371,6	319,5	276,2	188,4	106,8	1,330
	2000	0Q0H62000ee0000	1930	10	8,7	5,3	414,9	356,7	308,4	210,4	119,3	1,329

ee = number of elements

Multicolonna Integrated

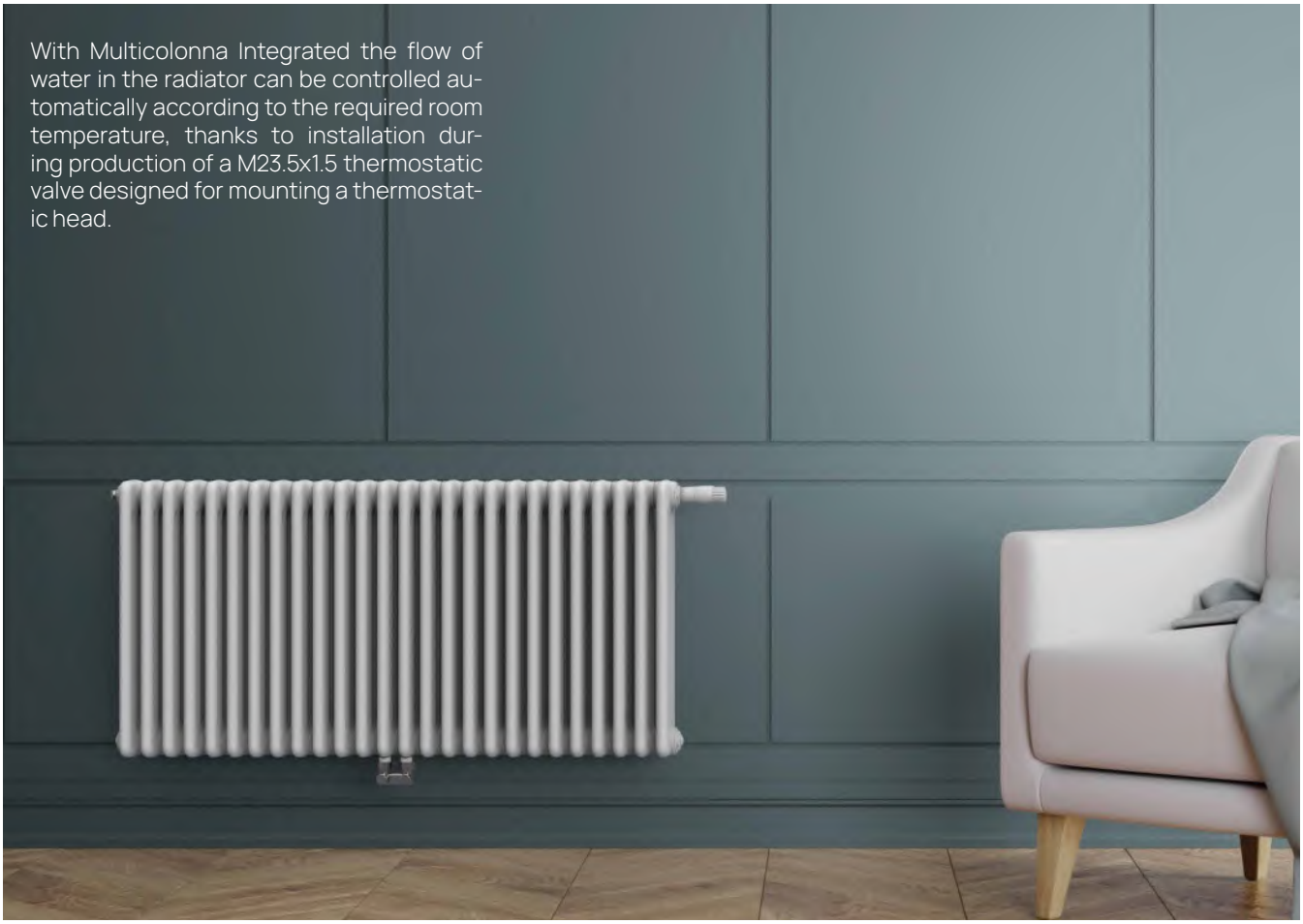

Image for illustrative purposes only

Technical specifications

Material: UNI EN 10130:2007 steel
Round vertical tubes, diameter 25 mm
Element width: 46 mm
Laser-welded manifolds
Manifold thread 1"1/4 G rhs or lhs
Working pressure 10 bar
Test pressure 13 bar
Maximum operating temperature 110° C

3/4" external thread

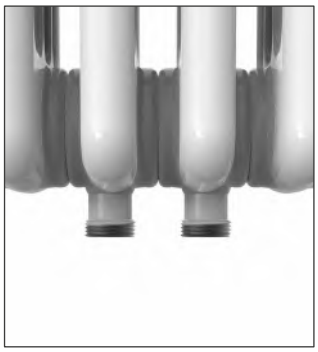

1/2" internal thread

Pressure drop and valve regulation

The setting for the thermostatic insert is obtained from the flow rate Q diagrams (expressed in kg/h) – Pressure drop Δp (expressed in bars or kPa). Starting from the Δt set in the system and the power of the radiator (EN442 standard output), the intersection with the pressure drop value on the X axis determines the nearest kv at which to set the insert (for example: position 3 or 4). Radiators with valve are provided with the insert in the N position (valve fully open). Instructions on adjusting the thermostatic insert are provided with every Multicolonna radiator. Multicolonna Integrated must NOT be tested with the valve closed, or the pressure plunger could break.

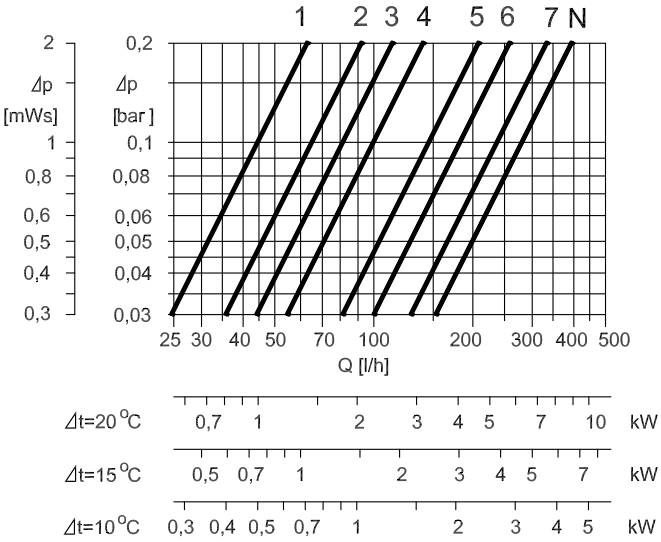

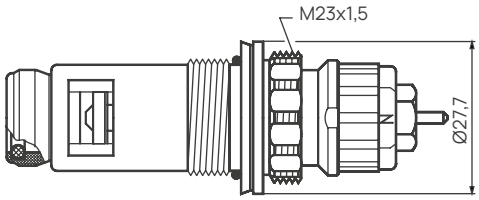

Code Standard configuration	Valve position
0Q01chhhhee0000	with built-in valve - top (side connection, 50 mm pipe centre, 3/4" external thread)
0Q02chhhhee0000	with built-in valve - bottom (side connection, 50 mm pipe centre, 3/4" external thread)
0Q01chhhhee00M0	with built-in valve - top (central connection, 3/4" external thread)
0Q02chhhhee00M0	with built-in valve - bottom (central connection, 3/4" external thread)
0Q01chhhhee00N0	with built-in valve - top (central connection, 1/2" internal thread)
0Q02chhhhee00N0	with built-in valve - bottom (central connection, 1/2" internal thread)

c = columns / hhh = height / ee = number of elements

Configurations

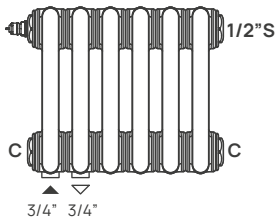

Cod. 0Qf1chhhhee0000

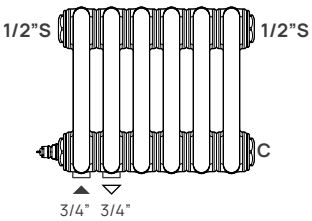

Cod. 0Qf2chhhhee0000

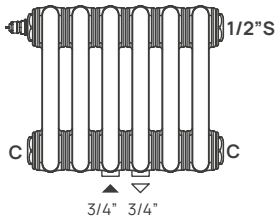

Cod. 0Qf1chhhhee00M0

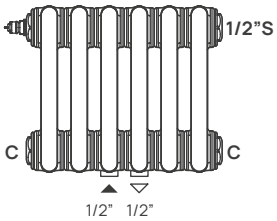

Cod. 0Qf1chhhhee00N0

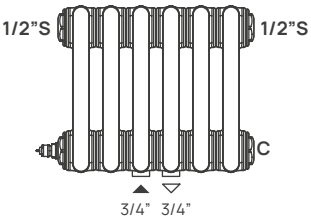

Cod. 0Qf2chhhhee00M0

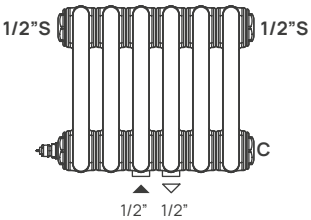

Cod. 0Qf2chhhhee00N0

Connections and accessories for side connection, 50 mm pipe centre

The Multicolonna Integrated with **top valve** is delivered in the following configurations:
- 2 x 3/4" connections with external thread for Eurocones, 50 mm pipe centre.
- 2 x pre-mounted blind plugs
- 1 x pre-mounted 1/2" vent plug

Connections and accessories for side connection, 50 mm pipe centre

The Multicolonna Integrated with **bottom valve** is delivered in the following configurations:
- 2 x 3/4" connections with external thread for Eurocones, 50 mm pipe centre.
- 1 x pre-mounted blind plug
- 2 x pre-mounted 1/2" vent plugs

Connections and accessories for central connection, 50 mm pipe centre

The Multicolonna Integrated with **top valve** is delivered in the following configurations:
- 2 x 3/4" connections with external thread for Eurocones, 50 mm pipe centre
- 2 x pre-mounted blind plugs
- 1 x pre-mounted 1/2" vent plug

or
- 2 x 1/2" connections with internal thread, 50 mm pipe centre
- 2 x pre-mounted blind plugs
- 1 x pre-mounted 1/2" vent plug

Connections and accessories for central connection, 50 mm pipe centre

The Multicolonna Integrated with **bottom valve** is delivered in the following configurations:
- 2 x 3/4" connections with external thread for Eurocones, 50 mm pipe centre
- 1 x pre-mounted blind plug
- 2 x pre-mounted 1/2" vent plugs

or
- 2 x 1/2" connections with internal thread, 50 mm pipe centre
- 1 x pre-mounted blind plug
- 2 x pre-mounted 1/2" vent plugs

Central connection is available only for the even models.

Multicolonna code

The Multicolonna code is mnemonic. The first 2 positions 0Q and the last position 0 are fixed.

The required model can be composed from a combination of numbers and letters, choosing the colour, model, columns, height, number of elements and configuration of the hydraulic connections according to the following table:

	Color	Model	Columns	Height	Number of elements	Configuration and hydraulic connections	
0Q	F	M	c	hhhh	ee	AAA	0

Code			Model
0Q			Multicolonna
F	=	0	Colour white
	=	1	Coloured - see table of finishes chapter
M	=	0	Standard
	=	1	With built-in valve – top
	=	2	With built-in valve – bottom
	=	A	90° version
	=	F	Welded feet
	=	H	Hygiene
	=	R	Arch version
c	=	2	Columns
	=	3	Columns
	=	4	Columns
	=	5	Columns
	=	6	Columns
hhhh			Height from 300 to 2500 mm
ee			Number of elements
AAA			Configurations and hydraulic connections - see page 34
0			

Modello - 0QFMChhhheeAAA0

M 0 - Standard

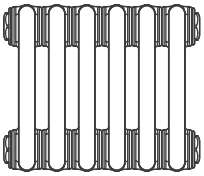

M 1 - Top built-in valve

see page 31

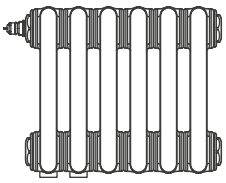

Side connection

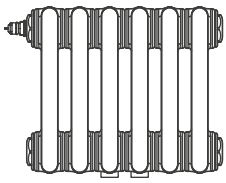

Central connection

M 2 - Bottom built-in valve

see page 31

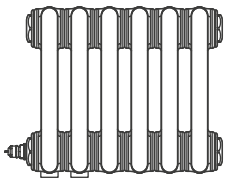

Side connection

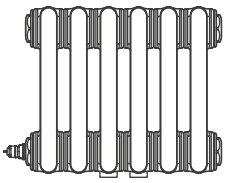

Central connection

M A - 90° version

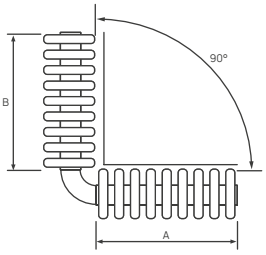

M L / F / G - Welded feet

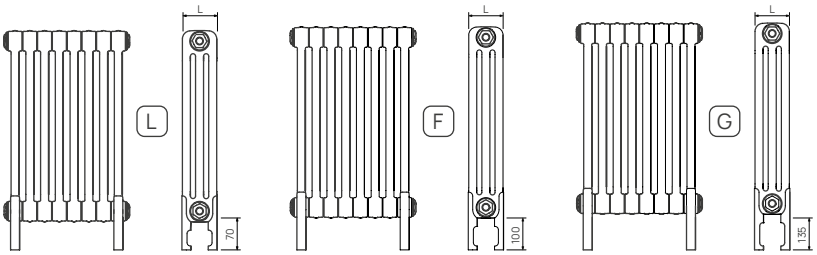

M H - Hygiene

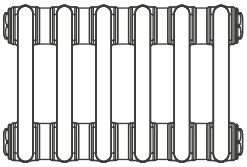

M R - Arch version

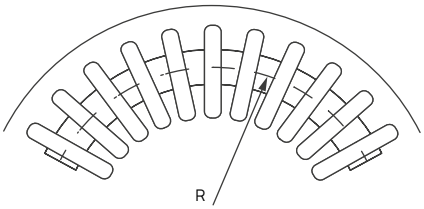

Configurations and hydraulic connections - 0QFMChhhheeAAA0

990

Nipplable version

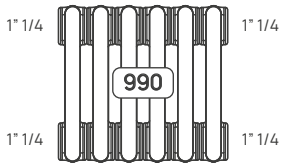

- S vent (not supplied as standard)
- ▶ in
- ◁ out
- C blind plug
- ▌ pre-mounted deflector
- RADIATORS cover for 1/2'' blind plug
- ◯ cover for 1/2'' blind plug

000

Standard configurations

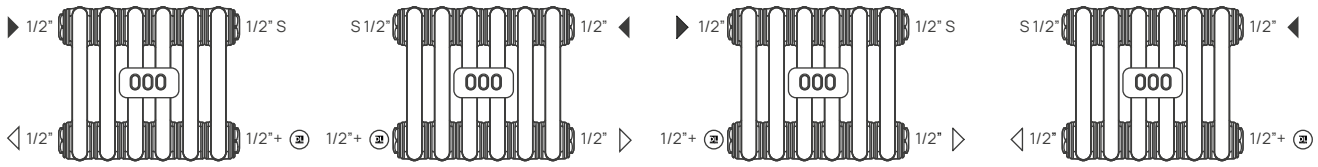

880

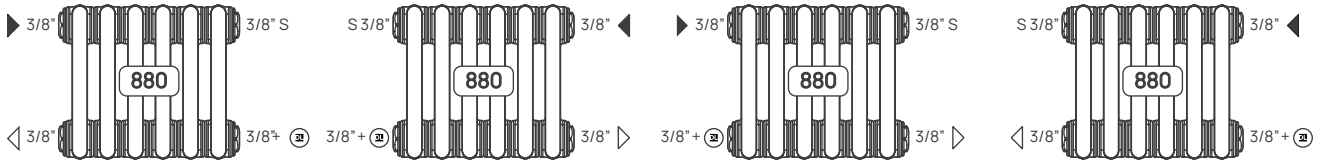

230

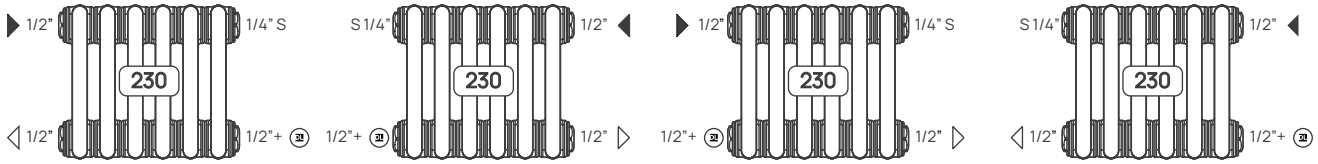

YA0

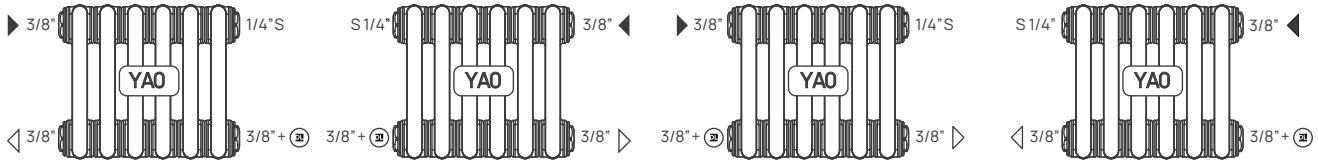

001

Low/low opposite side - standard 1/2" connections, internal thread

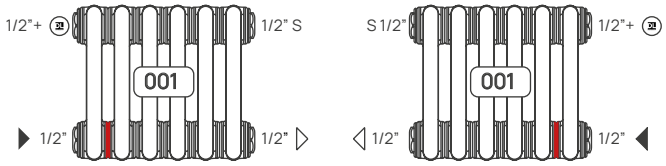

Configurations and hydraulic connections - 0QFMChhhheeAAA0

881

Low/low opposite side - standard 3/8" connections, internal thread

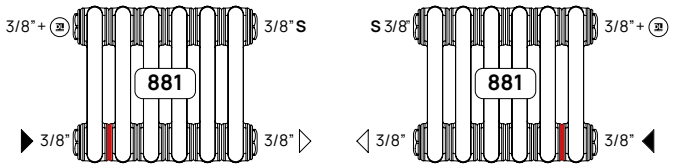

231

Low/low opposite side - standard 1/2" connections, internal thread

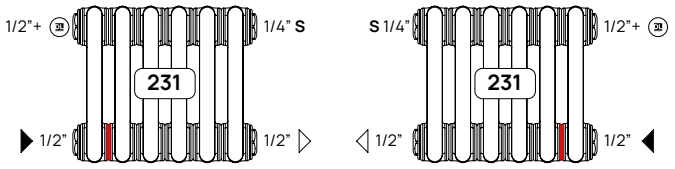

YA1

Low/low opposite side - standard 3/8" connections, internal thread

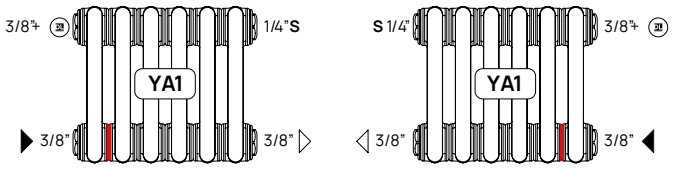

002

High/high opposite side - standard 1/2" connections, internal thread

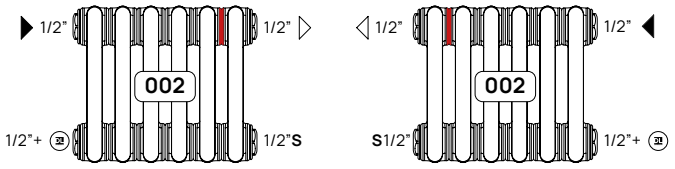

882

High/high opposite side - standard 3/8" connections, internal thread

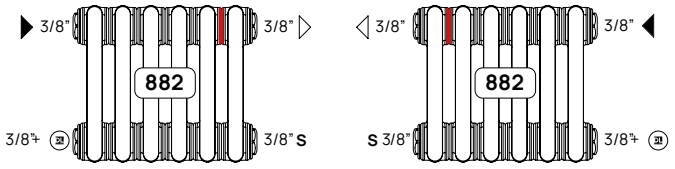

003

Low/high opposite side - standard 1/2" connections, internal thread

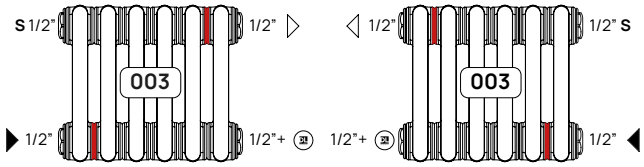

Configurations and hydraulic connections - 0QFMChhhheeAAA0

883

Low/high opposite side - standard 3/8" connections, internal thread

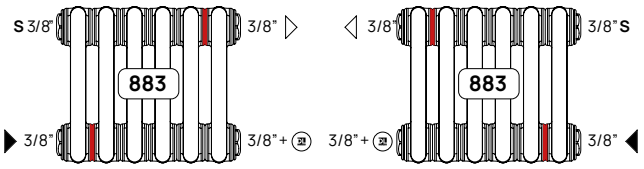

004

Side connections - standard 1/2" connection, internal thread

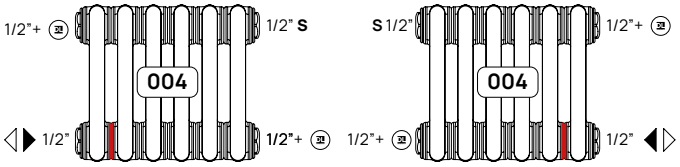

034

Side connections - standard 3/4" connection, internal thread

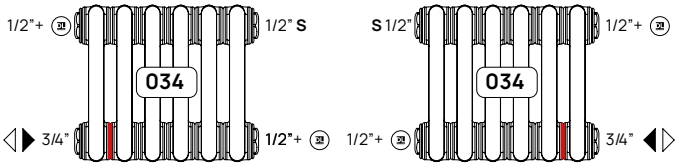

00A

Low/low perpendicular bottom connections - standard 1/2" connections, internal thread

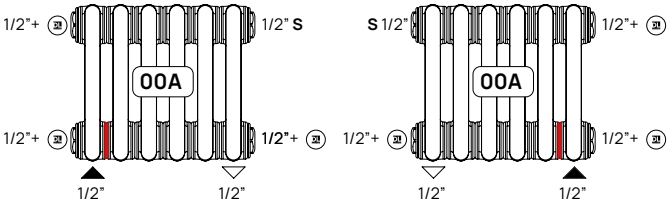

Y9A

Low/low perpendicular bottom connections - standard 1/2" connections, internal thread

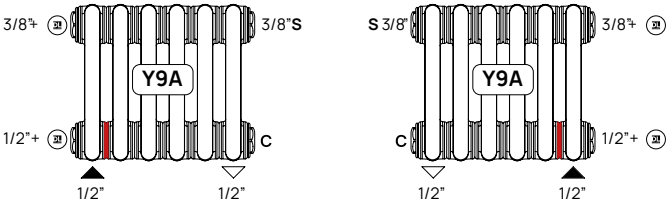

00B

High/high perpendicular top connections - standard 1/2" connections, internal thread

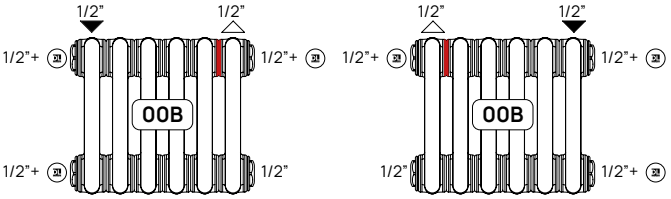

Configurations and hydraulic connections - 0QFMChhhheeAAA0

00D

Bottom connection 50 mm pipe centre - 1/2" connections, internal thread

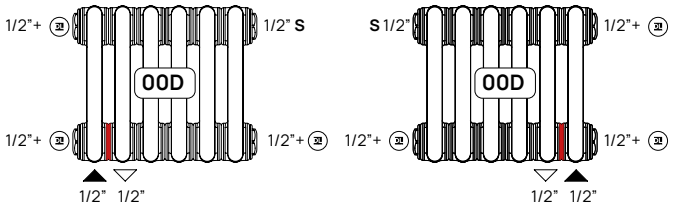

Y9D

Bottom connection 50 mm pipe centre - 1/2" connections, internal thread

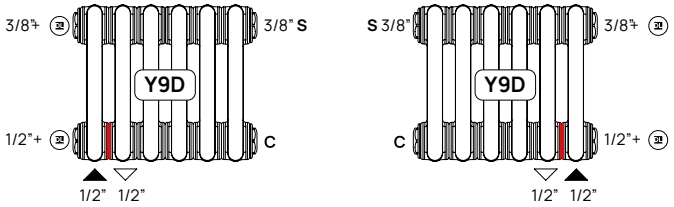

00E

Top connection 50 mm pipe centre - 1/2" connections, internal thread

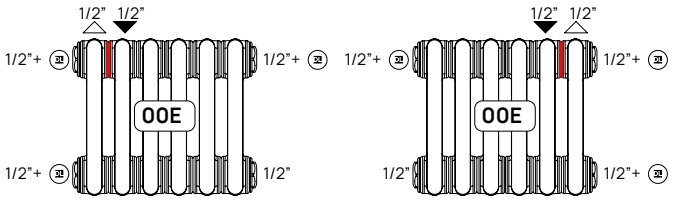

00G

Bottom connection - 1/2" connections, internal thread

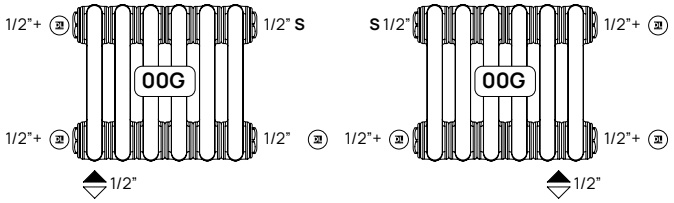

00M

Central connection - 3/4" central connection, external thread, 50 mm pipe centre (only for models with even number of elements)

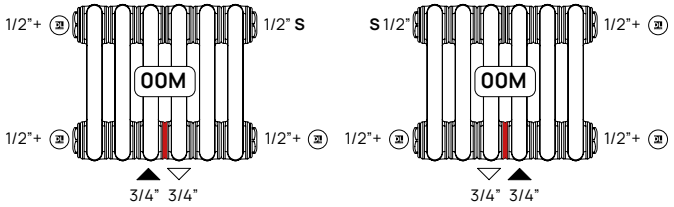

00N

Central connection - 1/2" central connection, internal thread, 50 mm pipe centre (only for models with even number of elements)

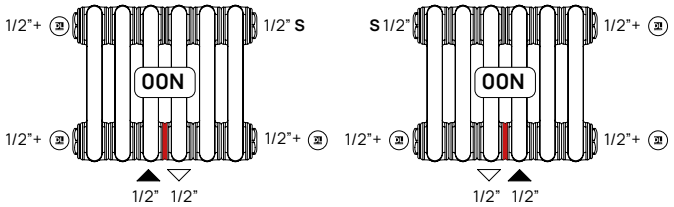

Recommended number of brackets/feet for installation

2 columns	Height																							
No. Elements	300	400	500	510	550	570	600	610	670	685	750	770	800	870	885	900	910	1000	1200	1500	1800	2000	2200	2500
da 2 a 19	2	2	2	2	2	2	2	2	2	2	2	2	2	2	2	2	2	2	2	2	2	2	2	2
da 20 a 40	3	3	3	3	3	3	3	3	3	3	3	3	3	3	3	3	3	3	3	3	3	3	3	3
3 columns	Height																							
No. Elements	300	400	500	510	550	570	600	610	670	685	750	770	800	870	885	900	910	1000	1200	1500	1800	2000	2200	2500
da 2 a 14	2	2	2	2	2	2	2	2	2	2	2	2	2	2	2	2	2	2	2	2	2	2	2	2
da 15 a 19	2	2	2	2	2	2	2	2	2	2	2	2	2	2	2	2	2	2	2	2	2	2	3	3
da 20 a 30	3	3	3	3	3	3	3	3	3	3	3	3	3	3	3	3	3	3	3	3	3	3	4	-
da 31 a 40	3	3	3	3	3	3	3	3	3	3	3	3	3	3	3	3	3	3	-	-	-	-	-	-
4 columns	Height																							
No. Elements	300	400	500	510	550	570	600	610	670	685	750	770	800	870	885	900	910	1000	1200	1500	1800	2000	2200	2500
da 2 a 16	2	2	2	2	2	2	2	2	2	2	2	2	2	2	2	2	2	2	2	2	2	3	3	3
da 17 a 19	2	2	2	2	2	2	2	2	2	2	2	2	2	2	2	2	2	2	2	2	3	3	3	3
20	3	3	3	3	3	3	3	3	3	3	3	3	3	3	3	3	3	3	3	3	3	3	3	4
da 21 a 26	3	3	3	3	3	3	3	3	3	3	3	3	3	3	3	3	3	3	3	3	3	4	4	-
da 27 a 30	3	3	3	3	3	3	3	3	3	3	3	3	3	3	3	3	3	3	3	3	4	4	5	-
da 31 a 40	3	3	3	3	3	3	3	3	3	3	3	3	3	3	3	3	3	3	-	-	-	-	-	-
5 columns	Height																							
No. Elements	300	400	500	510	550	570	600	610	670	685	750	770	800	870	885	900	910	1000	1200	1500	1800	2000	2200	2500
da 2 a 12	2	2	2	-	-	2	2	-	2	2	2	2	2	2	2	2	-	2	2	2	2	2	2	2
da 13 a 15	2	2	2	-	-	2	2	-	2	2	2	2	2	2	2	2	-	2	2	2	3	3	3	3
da 16 a 19	2	2	2	-	-	2	2	-	2	2	2	2	2	2	2	2	-	2	2	3	3	3	-	-
da 20 a 25	3	3	3	-	-	3	3	-	3	3	3	3	3	3	3	3	-	3	3	4	4	4	-	-
da 26 a 30	3	3	3	-	-	3	3	-	3	3	3	3	3	3	3	3	-	3	3	-	-	-	-	-
da 31 a 35	3	3	3	-	-	3	3	-	3	3	3	3	3	3	3	3	-	3	-	-	-	-	-	-
da 36 a 40	3	3	3	-	-	3	3	-	3	3	3	3	3	3	3	4	-	4	-	-	-	-	-	-
6 columns	Height																							
No. Elements	300	400	500	510	550	570	600	610	670	685	750	770	800	870	885	900	910	1000	1200	1500	1800	2000	2200	2500
da 2 a 10	2	2	2	-	-	2	2	-	2	2	2	2	2	2	2	2	-	2	2	2	2	2	3	3
da 11 a 13	2	2	2	-	-	2	2	-	2	2	2	2	2	2	2	2	-	2	2	2	3	3	3	3
da 14 a 15	2	2	2	-	-	2	2	-	2	2	2	2	2	2	2	2	-	2	2	3	3	3	-	-
da 16 a 19	2	2	2	-	-	2	2	-	2	2	2	2	2	2	2	2	-	2	3	3	4	-	-	-
20	3	3	3	-	-	3	3	-	3	3	3	3	3	3	3	3	-	3	3	3	4	-	-	-
da 21 a 25	3	3	3	-	-	3	3	-	3	3	3	3	3	3	3	3	-	3	3	-	-	-	-	-
da 26 a 30	3	3	3	-	-	3	3	-	3	3	3	3	3	3	3	3	-	3	4	-	-	-	-	-
da 31 a 36	3	3	3	-	-	3	3	-	3	3	3	3	3	3	3	4	-	4	-	-	-	-	-	-
da 37 a 38	3	3	3	-	-	3	3	-	3	3	3	3	3	4	4	4	-	4	-	-	-	-	-	-
da 39 a 40	4	4	4	-	-	4	4	-	4	4	4	4	4	4	4	4	-	4	-	-	-	-	-	-

Mobile flow deflector

For opposing connections from the bottom, certain precautions must be taken to maintain optimum heat output, particularly with tall and/or short radiators. In this case, the water flow heats the radiator unevenly and we therefore recommend fitting a flow deflector in the intake to ensure the water flows towards parts of the radiator which would otherwise be cold.

The mobile deflector tested by Radiators is cylindrical with two holes in the end and a 1/2" thread for easy installation. Important: the maximum tightening torque is 40 Nm.

For the fixing kit, see page 252.

Example where use of the mobile deflector is recommended.

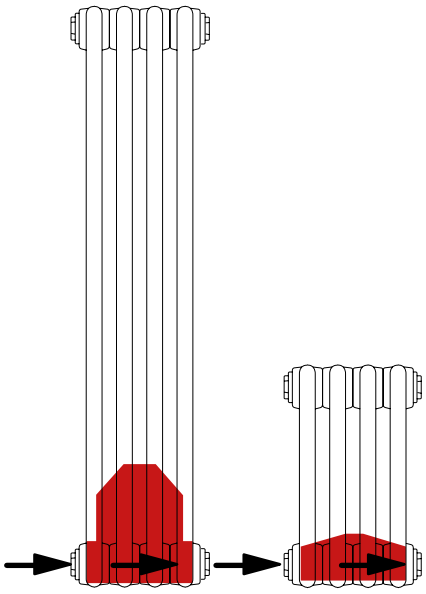

Nippling

Multicolonna radiators can be ordered in a single battery with a maximum number of elements, depending on the height and columns.
In the case of oversized installations, the radiators are supplied in blocks and must be assembled by nippling.
For the maximum number of batteries that can be assembled, see pages 12, 16, 20, 24, 28.
The minimum block that can be assembled consists of 2 elements.
Two or more blocks can be joined together. For the radiators to be nippled, the maximum tightening torque must not exceed 165 Nm.
Use RADIATORS accessories for correct nippling.

Code	Description
730Q002000	2 x nipples with 2 gaskets
550Q141200	1"1/4 to 1/2" reducers (left side)
550Q241200	1"1/4 to 1/2" reducers (right side)
550Q010100	Blind plug
6180002000	Vent plug
550Q003100	Plastic key for mounting reducers
550Q864800	Nipple key

Plattella

C4 Compact

C4 Special -Special DIN pipe centre

V6 L

V6 C

C4 Hygiene

V6 Hygiene

C6 Vertical

Linear

C4 Compact

C4 Special -Special DIN pipe centre

V6 L

V6 C

C4 Hygiene

V6 Hygiene

C6 Vertical

Plattella

Technical specifications

	Plattella						
	C4 Compact	C4 Special	V6 L	V6 C	C4 Hygiene	V6 Hygiene	C6 Vertical
Models	11-21-22-33	22-33	11-21-22-33	11-21-22-33	10-20-30	10-20-30	10-20-21-22
Top grille	√	√	√	√	-	-	√
Side panels	√	√	√	√	-	-	√ 20-21-22
Number connections	4 x ø 1/2	4 x ø 1/2	4 x ø 1/2 + 2 x ø 3/4	4 x ø 1/2 + 2 x ø 3/4	4 x ø 1/2	4 x ø 1/2 + 2 x ø 3/4	4 x ø 1/2 + 2 x ø 1/2
Plugs and vent	√	√	√	√	√	√	√
Thermostatable insert	-	-	can be ordered separately	can be ordered separately	-	can be ordered separately	-
Welded back supports	√	-	√ 11	√ 11	√	√ 10	√
Mounting brackets	√	-	-	-	√ 20-30	-	√
Working pressure	10 bar	10 bar	10 bar	10 bar	10 bar	10 bar	10 bar
Max. operating temperature	110 °C	110 °C	110 °C	110 °C	110 °C	110 °C	110 °C
	-	-	-	-	-	-	-
15 year warranty	√	√	√	√	√	√	√
CE	√	√	√	√	√	√	√
EN 442	√	√	√	√	√	√	√
NF	√ 11-22-33	√	√ 11-22-33	√ 11-22-33	√	√	√
RAL	√	√	√	√	√	√	-

Linear

Technical specifications

	Linear						
	C4 Compact	C4 Special	V6 L	V6 C	C4 Hygiene	V6 Hygiene	C6 Vertical
Models	11-20-21-22-33	22-33	11-21-22-33	11-21-22-33	10-20-30	10-20-30	10-20-21-22
Top grille	√	√	√	√	-	-	√
Side panels	√	√	√	√	-	-	√ 20-21-22
Number connections	4 x ø 1/2	4 x ø 1/2	4 x ø 1/2 + 2 x ø 3/4	4 x ø 1/2 + 2 x ø 3/4	4 x ø 1/2	4 x ø 1/2 + 2 x ø 3/4	4 x ø 1/2 + 2 x ø 1/2
Plugs and vent	-	√	√	√	-	√	√
Thermostatable insert	-	-	can be ordered separately	can be ordered separately	-	can be ordered separately	-
Welded back supports	√	-	√ 11	√ 11	√	√ 10	√
Mounting brackets	-	-	-	-	-	-	√
Working pressure	10 bar	10 bar	10 bar	10 bar	10 bar	10 bar	10 bar
Max. operating temperature	110 °C	110 °C	110 °C	110 °C	110 °C	110 °C	110 °C
	√	√	√	√	√	√	√
15 year warranty	√	√	√	√	√	√	√
CE	√	√	√	√	√	√	√
EN 442	√	√	√	√	√	√	√
NF	√ 20-22-33	√	√ 22-33	√ 22-33	√	√	√
RAL	√ 20-21-22-33	√	√ 21-22-33	√ 21-22-33	√	√	-

Nordic simplicity and minimalist lines:
Plattella decorates and heats spaces with a more classical style, combining cutting-edge technology and energy saving.

Plattella

Plattella range

Plattella is characterised by a sober, linear, timeless style, conceived to heat rooms with different styles and uses.

In addition to their versatile style, the panel radiators also combine high energy efficiency with the ability to exploit medium to low temperature heat sources. Use of top quality steel, a state-of-the-art production process and a rigorously tested high-resistance glossy finish are just some of the elements that make this range of radiators a standard setter for reliability and versatility.

Plattella versions available:
- C4 Compact with 4 side connections
- C4 Special with special pipe centre
- V6 L with bottom side connection and 4 connections
- V6 C with bottom central connection and 4 connections
- V8 with bottom side connection, bottom central and 4 side connections
- C4 Hygiene and V6 Hygiene, for easy cleaning without sacrificing heat output.
- C6 Vertical with 6 connections, available in heights from 1400 to 2400 mm and widths from 300 to 900 mm.

Innovation

With the largest MADE IN ITALY range of panels, RADIATORS has always been the Italian world leader in this product family.

Quality and performance

Produced using highly automated moulding and welding processes and designed to maximise heat outputs with convection flows, the Plattella range also stands out for a number of special characteristics, such as rounded corners and screw-on side panels.

Painting

A distinctive feature of the panels is their high-quality paint finish, thanks to an industrial process borrowed from the automotive sector.

The system used to paint the panels is divided into three phases:
- Hot degreasing and phosphatisation
- Electrophoretic dip coating to apply the base colour evenly in the innermost and outermost parts of the radiator, followed by baking at 185°C
- Epoxy powder coating and baking at 170°C to give the panels a smooth glossy finish. Colouring in White RAL9016, complying with DIN55900.

Certification and compliance marks

The steel panels are CE, NF, RAL certified and all exposed thermal yields are measured and certified according to the European standard EN 442.

Warranty

Thanks to the top quality standards and implementation of automated control systems, RADIATORS is the only company able to guarantee its hydronic products for 15 years.

PLATTELLA C4 Compact

Image for illustrative purposes only

Technical specifications
Material: UNI EN 10130:2007 steel
Channel pitch 33.33 mm
Connection thread 1/2" G
Working pressure 10 bars
Test pressure 13 bars
Max. operating temperature 110°C
3-phase painting process:
- hot pretreatment and phosphatisation
- electrophoretic dip base coat
- epoxy powder finish coat

Standard connections and accessories
Plattella Compact is delivered with:
- top grille
- screw-on side panels for greater safety
- 4 x 1/2" connections and 1 x installation kit including:
- GB brackets
- 1 x 1/2" blind plug
- 1 x 1/2" vent plug
- screws and anchors

The product is supplied with pre-assembled plastic lids that must be removed before installation and replaced with the supplied caps.

DL RADIATORS

PLATTELLA C4 Compact

Front view

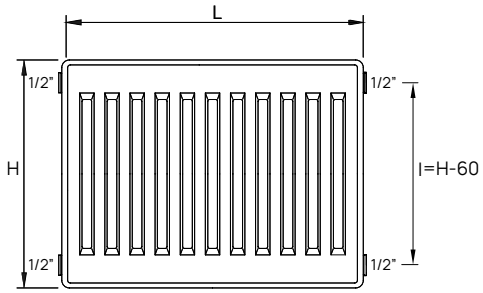

Rear view

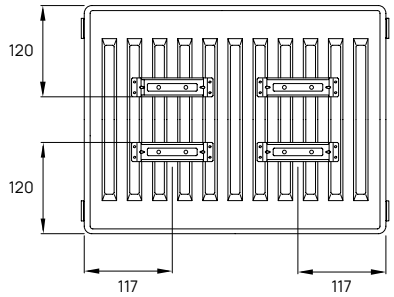

Top view

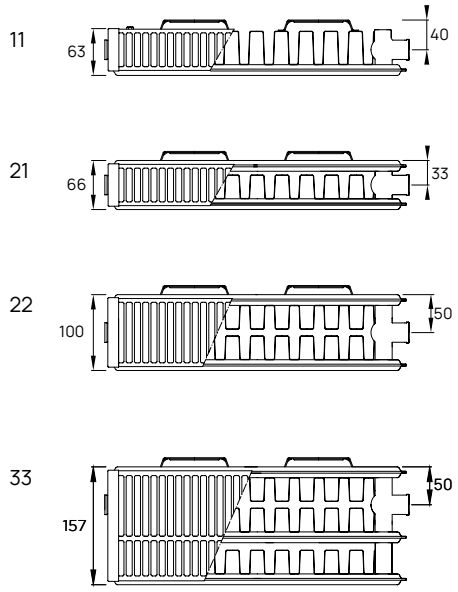

Configurations

In Out

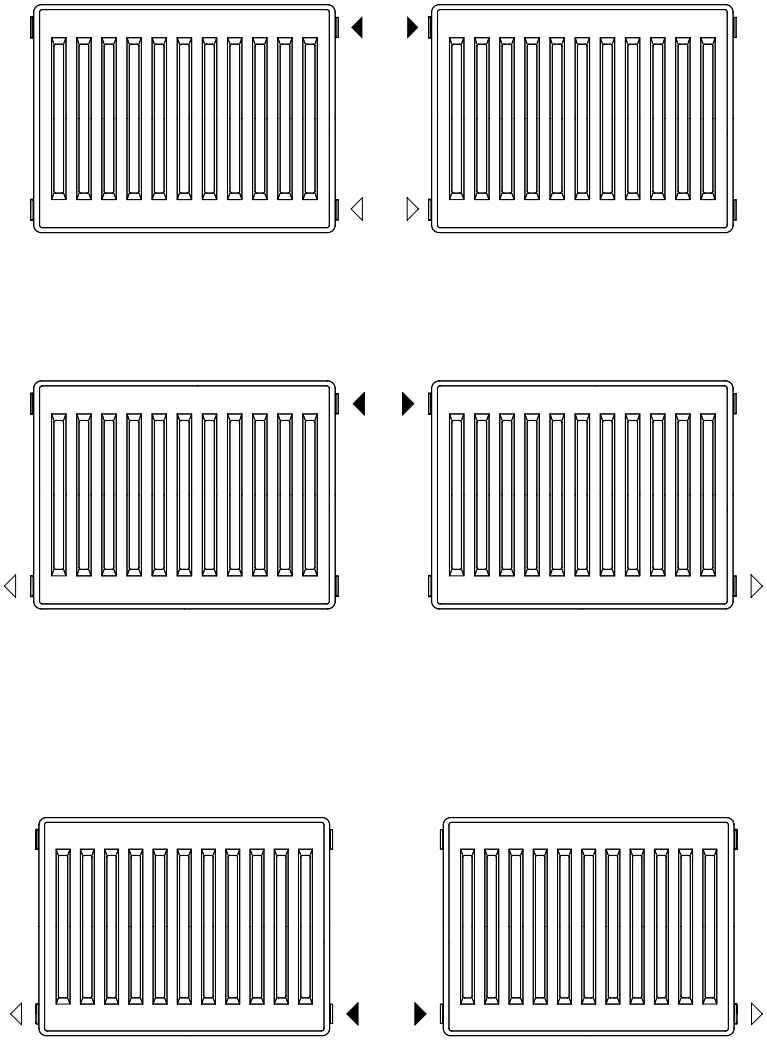

Dimensions are in millimeters (mm)

PLATTELLA C4 Compact

H 300 - I 240		11			21			22			33		
Depth (mm)		63			66			100			157		
Exponent (n)		1,257			1,291			1,298			1,306		
Length (mm)		Output Δt 50°C 75/65-20 W	Output Δt 42,5°C 70/55-20 W	Output Δt 30°C 55/45-20 W	Output Δt 50°C 75/65-20 W	Output Δt 42,5°C 70/55-20 W	Output Δt 30°C 55/45-20 W	Output Δt 50°C 75/65-20 W	Output Δt 42,5°C 70/55-20 W	Output Δt 30°C 55/45-20 W	Output Δt 50°C 75/65-20 W	Output Δt 42,5°C 70/55-20 W	Output Δt 30°C 55/45-20 W
400	outp	228	186	120	293	249	152	379	322	195	540	459	277
	cod.	0181243112			0181343112			0181543112			0181743112		
500	outp	285	232	150	367	312	190	473	402	244	675	574	346
	cod.	0181243115			0181343115			0181543115			0181743115		
600	outp	342	279	180	440	374	228	568	483	293	810	689	416
	cod.	0181243118			0181343118			0181543118			0181743118		
700	outp	399	325	210	513	436	265	663	563	341	945	804	485
	cod.	0181243121			0181343121			0181543121			0181743121		
800	outp	456	372	240	587	499	303	758	644	390	1080	918	554
	cod.	0181243124			0181343124			0181543124			0181743124		
900	outp	513	418	270	660	561	341	852	724	439	1215	1033	624
	cod.	0181243127			0181343127			0181543127			0181743127		
1000	outp	570	464	300	734	595	379	947	767	488	1351	1092	693
	cod.	0181243130			0181343130			0181543130			0181743130		
1100	outp	627	511	330	807	686	417	1042	885	537	1486	1263	762
	cod.	0181243133			0181343133			0181543133			0181743133		
1200	outp	684	557	360	880	748	455	1136	966	585	1621	1378	831
	cod.	0181243136			0181343136			0181543136			0181743136		
1400	outp	798	650	420	1027	873	531	1326	1127	683	1891	1607	970
	cod.	0181243142			0181343142			0181543142			0181743142		
1600	outp	912	743	479	1174	998	607	1515	1288	780	2161	1837	1108
	cod.	0181243148			0181343148			0181543148			0181743148		
1800	outp	1026	836	539	1320	1122	683	1704	1449	878	2431	2066	1247
	cod.	0181243154			0181343154			0181543154			0181743154		
2000	outp	1140	929	599	1467	1247	758	1894	1610	976	2701	2296	1386
	cod.	0181243160			0181343160			0181543160			0181743160		
2300	outp	1311	1068	689	1687	1434	872	2178	1851	1122	3106	2640	1593
	cod.	0181243169			0181343169			0181543169			0181743169		
2600	outp	1482	1208	779	1907	1621	986	2462	2093	1268	3511	2985	1801
	cod.	0181243178			0181343178			0181543178			0181743178		
3000	outp	1710	1393	899	2201	1870	1138	2841	2415	1463	4052	3444	2078
	cod.	0181243190			0181343190			0181543190			0181743190		

H 400 - I 340		11			21			22			33		
Depth (mm)		63			66			100			157		
Exponent (n)		1,264			1,299			1,303			1,312		
Length (mm)		Output Δt 50°C 75/65-20 W	Output Δt 42,5°C 70/55-20 W	Output Δt 30°C 55/45-20 W	Output Δt 50°C 75/65-20 W	Output Δt 42,5°C 70/55-20 W	Output Δt 30°C 55/45-20 W	Output Δt 50°C 75/65-20 W	Output Δt 42,5°C 70/55-20 W	Output Δt 30°C 55/45-20 W	Output Δt 50°C 75/65-20 W	Output Δt 42,5°C 70/55-20 W	Output Δt 30°C 55/45-20 W
400	outp	283	230	148	363	309	187	467	397	240	666	567	341
	cod.	0181244112			0181344112			0181544112			0181744112		
500	outp	354	287	185	454	386	234	584	496	300	833	708	426
	cod.	0181244115			0181344115			0181544115			0181744115		
600	outp	423	345	223	545	463	281	700	595	360	1000	850	511
	cod.	0181244118			0181344118			0181544118			0181744118		
700	outp	495	402	260	635	540	327	817	694	420	1166	991	597
	cod.	0181244121			0181344121			0181544121			0181744121		
800	outp	566	459	297	726	617	374	934	794	480	1333	1133	682
	cod.	0181244124			0181344124			0181544124			0181744124		
900	outp	636	517	334	817	694	421	1050	893	540	1500	1275	767
	cod.	0181244127			0181344127			0181544127			0181744127		
1000	outp	707	574	371	908	735	468	1167	944	600	1666	1346	852
	cod.	0181244130			0181344130			0181544130			0181744130		
1100	outp	778	632	408	998	849	514	1284	1091	660	1833	1558	973
	cod.	0181244133			0181344133			0181544133			0181744133		
1200	outp	848	689	445	1089	926	561	1400	1190	720	1999	1700	1023
	cod.	0181244136			0181344136			0181544136			0181744136		
1400	outp	990	804	519	1271	1080	655	1634	1389	840	2333	1983	1193
	cod.	0181244142			0181344142			0181544142			0181744142		
1600	outp	1131	919	596	1452	1234	748	1867	1587	960	2666	2266	1364
	cod.	0181244148			0181344148			0181544148			0181744148		
1800	outp	1273	1034	668	1634	1389	842	2101	1786	1080	2999	2549	1534
	cod.	0181244154			0181344154			0181544154			0181744154		
2000	outp	1414	1148	742	1815	1543	935	2334	1984	1200	3332	2833	1704
	cod.	0181244160			0181344160			0181544160			0181744160		
2300	outp	1626	1321	853	2088	1775	1075	2684	2281	1380	3832	3257	1960
	cod.	0181244169			0181344169			0181544169			0181744169		
2600	outp	1838	1493	965	2360	2006	1216	3034	2579	1559	4332	3682	2216
	cod.	0181244178			0181344178			0181544178			0181744178		
3000	outp	2121	1723	1113	2723	2315	1403	3501	2976	1799	4999	4249	2557
	cod.	0181244190			0181344190			0181544190			0181744190		

PLATTELLA C4 Compact

H 500 - I 440		11			21			22			33		
Depth (mm)		63			66			100			157		
Exponent (n)		1,270			1,306			1,307			1,318		
Length (mm)		Output Δt 50°C 75/65-20 W	Output Δt 42,5°C 70/55-20 W	Output Δt 30°C 55/45-20 W	Output Δt 50°C 75/65-20 W	Output Δt 42,5°C 70/55-20 W	Output Δt 30°C 55/45-20 W	Output Δt 50°C 75/65-20 W	Output Δt 42,5°C 70/55-20 W	Output Δt 30°C 55/45-20 W	Output Δt 50°C 75/65-20 W	Output Δt 42,5°C 70/55-20 W	Output Δt 30°C 55/45-20 W
400	outp	337	274	176	431	366	221	554	471	284	791	672	403
	cod.	0181245112			0181345112			0181545112			0181745112		
500	outp	421	343	220	538	457	276	693	589	355	989	841	504
	cod.	0181245115			0181345115			0181545115			0181745115		
600	outp	505	411	264	646	549	331	832	707	426	1187	1009	605
	cod.	0181245118			0181345118			0181545118			0181745118		
700	outp	590	480	308	753	640	387	970	825	497	1384	1177	706
	cod.	0181245121			0181345121			0181545121			0181745121		
800	outp	674	548	352	861	732	442	1109	943	569	1582	1345	807
	cod.	0181245124			0181345124			0181545124			0181745124		
900	outp	758	617	396	969	823	497	1247	1060	640	1780	1513	908
	cod.	0181245127			0181345127			0181545127			0181745127		
1000	outp	842	685	440	1076	870	552	1386	1121	711	1978	1596	1008
	cod.	0181245130			0181345130			0181545130			0181745130		
1100	outp	927	754	484	1184	1006	607	1525	1296	782	2175	1849	1109
	cod.	0181245133			0181345133			0181545133			0181745133		
1200	outp	1011	822	528	1292	1098	663	1663	1414	853	2373	2017	1210
	cod.	0181245136			0181345136			0181545136			0181745136		
1400	outp	1179	959	616	1507	1281	773	1941	1649	995	2769	2353	1412
	cod.	0181245142			0181345142			0181545142			0181745142		
1600	outp	1348	1096	704	1722	1464	884	2218	1885	1137	3164	2690	1614
	cod.	0181245148			0181345148			0181545148			0181745148		
1800	outp	1516	1233	792	1937	1647	994	2496	2121	1279	3560	3026	1815
	cod.	0181245154			0181345154			0181545154			0181745154		
2000	outp	1685	1370	880	2153	1830	1104	2772	2356	1421	3955	3362	2017
	cod.	0181245160			0181345160			0181545160			0181745160		
2300	outp	1937	1576	1012	2475	2104	1270	3188	2710	1653	4549	3866	2319
	cod.	0181245169			0181345169			0181545169			0181745169		
2600	outp	2190	1781	1144	2798	2379	1436	3604	3063	1848	5142	4371	2622
	cod.	0181245178			0181345178			0181545178			0181745178		
3000	outp	2527	2056	1320	3229	2745	1657	4158	3535	2132	5933	5043	3025
	cod.	0181245190			0181345190			0181545190			0181745190		

H 600 - I 540		11			21			22			33		
Depth (mm)		63			66			100			157		
Exponent (n)		1,276			1,313			1,312			1,324		
Length (mm)		Output Δt 50°C 75/65-20 W	Output Δt 42,5°C 70/55-20 W	Output Δt 30°C 55/45-20 W	Output Δt 50°C 75/65-20 W	Output Δt 42,5°C 70/55-20 W	Output Δt 30°C 55/45-20 W	Output Δt 50°C 75/65-20 W	Output Δt 42,5°C 70/55-20 W	Output Δt 30°C 55/45-20 W	Output Δt 50°C 75/65-20 W	Output Δt 42,5°C 70/55-20 W	Output Δt 30°C 55/45-20 W
400	outp	391	318	204	497	422	254	643	547	329	916	779	466
	cod.	0181246112			0181346112			0181546112			0181746112		
500	outp	489	397	255	621	528	318	804	684	411	1145	973	582
	cod.	0181246115			0181346115			0181546115			0181746115		
600	outp	586	477	305	745	634	381	965	820	494	1374	1168	699
	cod.	0181246118			0181346118			0181546118			0181746118		
700	outp	684	556	356	870	739	445	1126	957	576	1603	1363	815
	cod.	0181246121			0181346121			0181546121			0181746121		
800	outp	782	635	407	994	845	508	1287	1094	658	1832	1558	932
	cod.	0181246124			0181346124			0181546124			0181746124		
900	outp	880	715	458	1118	950	572	1448	1230	740	2061	1752	1048
	cod.	0181246127			0181346127			0181546127			0181746127		
1000	outp	977	794	509	1242	1003	635	1608	1299	823	2290	1847	1164
	cod.	0181246130			0181346130			0181546130			0181746130		
1100	outp	1075	874	560	1367	1162	699	1769	1504	905	2520	2142	1281
	cod.	0181246133			0181346133			0181546133			0181746133		
1200	outp	1173	953	611	1491	1267	762	1930	1641	987	2749	2336	1397
	cod.	0181246136			0181346136			0181546136			0181746136		
1400	outp	1368	1112	713	1739	1478	889	2252	1914	1152	3207	2726	1630
	cod.	0181246142			0181346142			0181546142			0181746142		
1600	outp	1564	1271	815	1988	1690	1016	2573	2187	1316	3665	3115	1863
	cod.	0181246148			0181346148			0181546148			0181746148		
1800	outp	1759	1430	916	2236	1901	1143	2895	2461	1481	4123	3504	2096
	cod.	0181246154			0181346154			0181546154			0181746154		
2000	outp	1955	1589	1018	2485	2112	1270	3217	2734	1645	4581	3894	2329
	cod.	0181246160			0181346160			0181546160			0181746160		
2300	outp	2248	1827	1171	2857	2429	1461	3699	3144	1892	5268	4478	2678
	cod.	0181246169			0181346169			0181546169			0181746169		
2600	outp	2541	2065	1324	3230	2745	1651	4182	3555	2139	5955	5062	3027
	cod.	0181246178			0181346178			0181546178			0181746178		
3000	outp	2932	2383	1527	3727	3168	1905	4825	4101	2468	6871	5841	3493
	cod.	0181246190			0181346190			0181546190			0181746190		

PLATTELLA C4 Compact

H 700 - I 640		11			21			22			33		
Depth (mm)		63			66			100			157		
Exponent (n)		1,280			1,323			1,322			1,336		
Length (mm)		Output Δt 50°C 75/65-20 W	Output Δt 42,5°C 70/55-20 W	Output Δt 30°C 55/45-20 W	Output Δt 50°C 75/65-20 W	Output Δt 42,5°C 70/55-20 W	Output Δt 30°C 55/45-20 W	Output Δt 50°C 75/65-20 W	Output Δt 42,5°C 70/55-20 W	Output Δt 30°C 55/45-20 W	Output Δt 50°C 75/65-20 W	Output Δt 42,5°C 70/55-20 W	Output Δt 30°C 55/45-20 W
400	outp	446	362	232	563	479	286	735	624	374	1043	887	527
	cod.	0181247112			0181347112			0181547112			0181747112		
500	outp	557	452	290	704	598	358	918	780	467	1304	1109	659
	cod.	0181247115			0181347115			0181547115			0181747115		
600	outp	668	543	347	844	718	429	1102	937	561	1565	1330	791
	cod.	0181247118			0181347118			0181547118			0181747118		
700	outp	780	633	405	985	837	501	1285	1093	654	1826	1552	922
	cod.	0181247121			0181347121			0181547121			0181747121		
800	outp	891	724	463	1126	957	573	1469	1249	747	2087	1774	1054
	cod.	0181247124			0181347124			0181547124			0181747124		
900	outp	1003	814	521	1267	1077	644	1653	1405	841	2347	1995	1186
	cod.	0181247127			0181347127			0181547127			0181747127		
1000	outp	1114	905	579	1407	1135	716	1836	1481	934	2608	2099	1318
	cod.	0181247130			0181347130			0181547130			0181747130		
1100	outp	1225	995	637	1548	1316	787	2020	1717	1028	2869	2439	1449
	cod.	0181247133			0181347133			0181547133			0181747133		
1200	outp	1337	1085	695	1689	1436	859	2204	1873	1121	3130	2660	1581
	cod.	0181247136			0181347136			0181547136			0181747136		
1400	outp	1559	1266	811	1970	1675	1002	2571	2185	1308	3652	3104	1845
	cod.	0181247142			0181347142			0181547142			0181747142		
1600	outp	1782	1447	926	2252	1914	1145	2938	2497	1495	4173	3547	2108
	cod.	0181247148			0181347148			0181547148			0181747148		
1800	outp	2005	1628	1042	2533	2153	1288	3305	2810	1682	4695	3991	2372
	cod.	0181247154			0181347154			0181547154			0181747154		
2000	outp	2228	1809	1158	2815	2393	1432	3673	3122	1869	5216	4434	2635
	cod.	0181247160			0181347160			0181547160			0181747160		
2300	outp	2562	2081	1332	3237	2752	1646	4224	3590	2149	5999	5099	3030
	cod.	0181247169			0181347169			0181547169			0181747169		
2600	outp	2896	2352	1505	3659	3110	1861	4775	4058	2429	6781	5764	3426
	cod.	0181247178			0181347178			0181547178			0181747178		
3000	outp	3342	2714	1737	4222	3589	2147	5509	4683	2803	7825	6651	3953
	cod.	0181247190			0181347190			0181547190			0181747190		

H 900 - I 840		11			21			22			33		
Depth (mm)		63			66			100			157		
Exponent (n)		1,288			1,343			1,343			1,361		
Length (mm)		Output Δt 50°C 75/65-20 W	Output Δt 42,5°C 70/55-20 W	Output Δt 30°C 55/45-20 W	Output Δt 50°C 75/65-20 W	Output Δt 42,5°C 70/55-20 W	Output Δt 30°C 55/45-20 W	Output Δt 50°C 75/65-20 W	Output Δt 42,5°C 70/55-20 W	Output Δt 30°C 55/45-20 W	Output Δt 50°C 75/65-20 W	Output Δt 42,5°C 70/55-20 W	Output Δt 30°C 55/45-20 W
400	outp	558	453	289	696	591	350	927	788	467	1307	1111	652
	cod.	0181249112			0181349112			0181549112			0181749112		
500	outp	698	566	361	870	739	438	1159	985	583	1634	1389	815
	cod.	0181249115			0181349115			0181549115			0181749115		
600	outp	837	679	433	1044	887	525	1390	1182	700	1961	1667	978
	cod.	0181249118			0181349118			0181549118			0181749118		
700	outp	977	792	505	1218	1035	613	1622	1379	817	2288	1945	1141
	cod.	0181249121			0181349121			0181549121			0181749121		
800	outp	1116	905	578	1392	1183	701	1854	1576	933	2615	2222	1304
	cod.	0181249124			0181349124			0181549124			0181749124		
900	outp	1256	1018	650	1566	1331	788	2085	1773	1050	2942	2500	1467
	cod.	0181249127			0181349127			0181549127			0181749127		
1000	outp	1395	1131	722	1740	1398	876	2317	1863	1167	3268	2619	1630
	cod.	0181249130			0181349130			0181549130			0181749130		
1100	outp	1535	1244	794	1914	1627	963	2549	2166	1283	3595	3056	1793
	cod.	0181249133			0181349133			0181549133			0181749133		
1200	outp	1674	1358	867	2088	1774	1051	2781	2363	1400	3922	3334	1956
	cod.	0181249136			0181349136			0181549136			0181749136		
1400	outp	1953	1584	1011	2436	2070	1226	3244	2757	1633	4576	3889	2282
	cod.	0181249142			0181349142			0181549142			0181749142		
1600	outp	2232	1810	1155	2784	2366	1401	3707	3151	1867	5229	4445	2608
	cod.	0181249148			0181349148			0181549148			0181749148		
1800	outp	2511	2036	1300	3131	2662	1576	4171	3545	2100	5883	5001	2934
	cod.	0181249154			0181349154			0181549154			0181749154		
2000	outp	2790	2263	1444	3479	2957	1751	4634	3939	2333	6537	5556	3260
	cod.	0181249160			0181349160			0181549160			0181749160		
2300	outp	3209	2602	1661	4001	3401	2014	5329	4530	2683	7517	6390	3749
	cod.	0181249169			0181349169			0181549169			0181749169		
2600	outp	3627	2941	1877	4523	3845	2277	6024	5121	3033	8498	7223	4238
	cod.	0181249178			0181349178			0181549178			0181749178		
3000	outp	4185	3394	2166	5219	4436	2627	6951	5909	3500	9805	8334	4890
	cod.	0181249190			0181349190			0181549190			0181749190		

Note

PLATTELLA C4 Special

Plattella C4 Special is designed to provide a radiant panel able to replace old aluminium radiators with particular pipe centres. Versions with special pipe centres are available for Compact models 22 and 33. The panel can be rotated so that the special pipe centre can be on either the right or left as required.

Image for illustrative purposes only

Technical specifications
Material: UNI EN 10130:2007 steel
Channel pitch 33.33 mm
Connection thread 1/2" G
Working pressure 10 bars
Test pressure 13 bars
Max. operating temperature 110°C
3-phase painting process:
- hot pretreatment and phosphatisation
- electrophoretic dip base coat
- epoxy powder finish coat

Standard connections and accessories
Plattella Compact is delivered with:
- top grille
- screw-on side panels for greater safety
- 4 x 1/2" connections
- plugs and vent included

The product is supplied with pre-assembled plastic lids that must be removed before installation and replaced with the supplied caps.

Fixing kit not included.

Reversibility
Double pipe centre:
- I1 = H-100
- I2 = H-60

PLATTELLA C4 Special

Front view

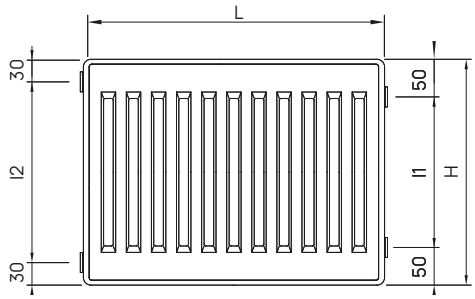

Rear view

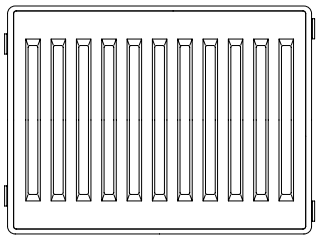

Top view

22

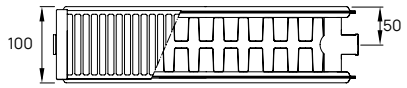

33

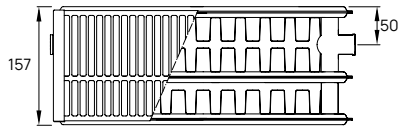

Configurations

In Out

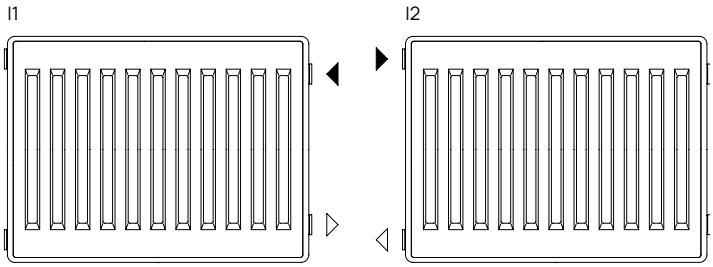

Dimensions are in millimeters (mm)

PLATTELLA C4 Special

H 600 - I1 500 / I2 540		22			33		
Depth (mm)		100			157		
Exponent (n)		1,312			1,318		
Length (mm)		Output Δt 50°C 75/65-20 W	Output Δt 42,5°C 70/55-20 W	Output Δt 30°C 55/45-20 W	Output Δt 50°C 75/65-20 W	Output Δt 42,5°C 70/55-20 W	Output Δt 30°C 55/45-20 W
400	outp	688	556	352	982	794	501
	cod.	0181226912			0181336912		
500	outp	860	695	440	1227	992	626
	cod.	0181226915			0181336915		
600	outp	1032	834	528	1472	1191	751
	cod.	0181226918			0181336918		
700	outp	1204	973	616	1718	1389	876
	cod.	0181226921			0181336921		
800	outp	1376	1112	704	1963	1587	1002
	cod.	0181226924			0181336924		
900	outp	1548	1251	792	2209	1786	1127
	cod.	0181226927			0181336927		
1000	outp	1720	1390	880	2454	1984	1252
	cod.	0181226930			0181336930		
1100	outp	1892	1529	968	2699	2183	1377
	cod.	0181226933			0181336933		
1200	outp	2064	1668	1056	2945	2381	1502
	cod.	0181226936			0181336936		
1400	outp	2408	1946	1232	3436	2778	1753
	cod.	0181226942			0181336942		
1600	outp	2752	2223	1408	3926	3175	2003
	cod.	0181226948			0181336948		
1800	outp	3096	2501	1584	4417	3572	2254
	cod.	0181226954			0181336954		
2000	outp	3440	2779	1760	4908	3968	2504
	cod.	0181226960			0181336960		
2300	outp	3956	3196	2024	5644	4564	2880
	cod.	0181226969			0181336969		
2600	outp	4472	3613	2288	6380	5159	3255
	cod.	0181226978			0181336978		
3000	outp	5160	4169	2640	7362	5953	3756
	cod.	0181226990			0181336990		

H 700 - I1 600 / I2 640		22			33		
Depth (mm)		100			157		
Exponent (n)		1,319			1,328		
Length (mm)		Output Δt 50°C 75/65-20 W	Output Δt 42,5°C 70/55-20 W	Output Δt 30°C 55/45-20 W	Output Δt 50°C 75/65-20 W	Output Δt 42,5°C 70/55-20 W	Output Δt 30°C 55/45-20 W
400	outp	781	630	398	1107	893	562
	cod.	0181227912			0181337912		
500	outp	997	787	498	1384	1116	703
	cod.	0181227915			0181337915		
600	outp	1172	944	597	1661	1340	844
	cod.	0181227918			0181337918		
700	outp	1367	1102	697	1938	1563	984
	cod.	0181227921			0181337921		
800	outp	1562	1259	796	2214	1786	1125
	cod.	0181227924			0181337924		
900	outp	1758	1416	896	2491	2009	1265
	cod.	0181227927			0181337927		
1000	outp	1953	1574	995	2768	2233	1405
	cod.	0181227930			0181337930		
1100	outp	2148	1731	1095	3045	2456	1546
	cod.	0181227933			0181337933		
1200	outp	2344	1889	1194	3322	2679	1687
	cod.	0181227936			0181337936		
1400	outp	2734	2203	1393	3875	3126	1968
	cod.	0181227942			0181337942		
1600	outp	3125	2518	1592	4429	3572	2249
	cod.	0181227948			0181337948		
1800	outp	3515	2833	1791	4982	4019	2531
	cod.	0181227954			0181337954		
2000	outp	3906	3148	1990	5536	4465	2812
	cod.	0181226960			0181337960		
2300	outp	4492	3620	2289	6366	5135	3234
	cod.	0181227969			0181337969		
2600	outp	5078	4092	2587	7197	5805	3655
	cod.	0181227978			0181337978		
3000	outp	5859	4721	2985	8304	6698	4218
	cod.	0181227990			0181337990		

Note

PLATTELLA V6 L

Image for illustrative purposes only

Technical specifications
Material: UNI EN 10130:2007 steel
Channel pitch 33.33 mm
Connection thread 1/2" G - 3/4" G
Working pressure 10 bars
Test pressure 13 bars
Max. operating temperature 110°C
3-phase painting process:
- hot pretreatment and phosphatization
- electrophoretic dip base coat
- epoxy powder finish coat

Standard connections and accessories
Plattella with right side connection is delivered with:
- top grille
- screw-on side panels for greater safety
- 4 x 1/2" side connections
- 2 x 3/4" bottom connections, external thread, 50 mm pipe centre
- 3 x 1/2" blind plugs
- 1 x 1/2" vent plug

The product comes with pre-installed plastic covers that must be removed before installation and, if necessary, replaced with caps that can be purchased separately.

Fixing kit not supplied.

Thermostatic insert and thermostatic head can be ordered separately.

PLATTELLA V6 L

Front view

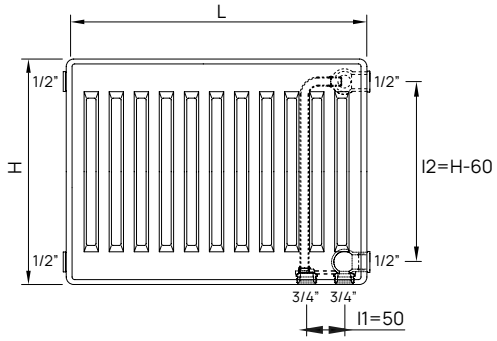

Rear view mod. 11

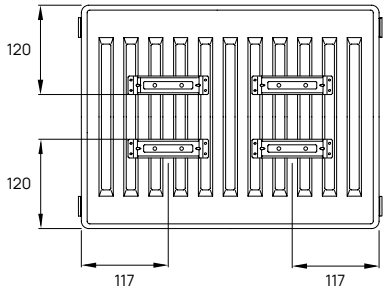

Top view

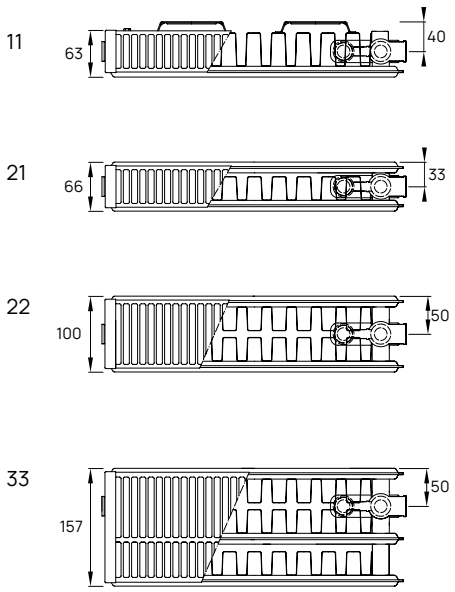

Dimensions are in millimeters (mm)

Configurations

In Out

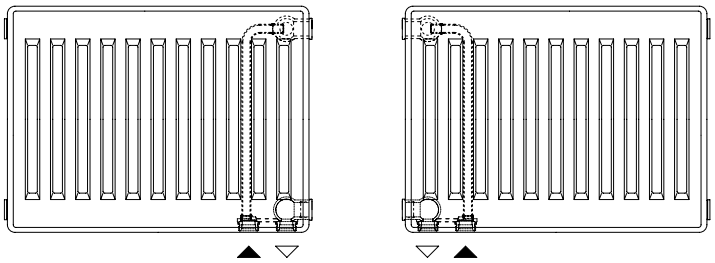

Reversibility only for models 21 - 22

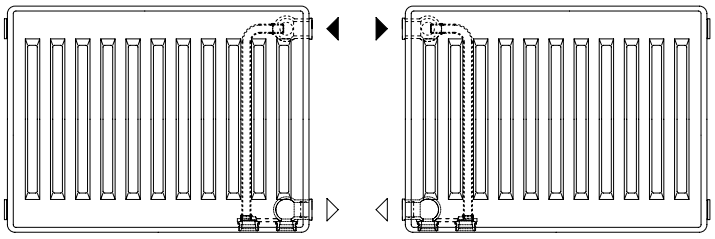

Reversibility only for models 21 - 22

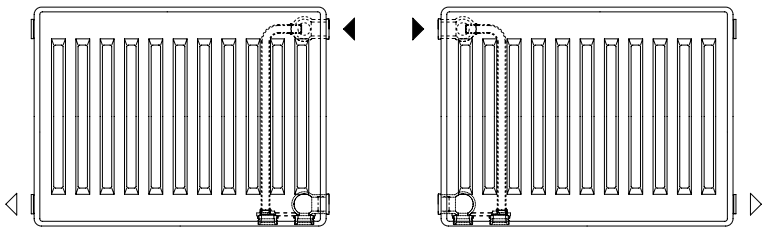

Reversibility only for models 21 - 22

PLATTELLA V6 L

H 300 - I1 50 / I2 240		11			21			22			33		
Depth (mm)		63			66			100			157		
Exponent (n)		1,257			1,291			1,298			1,306		
Length (mm)		Output Δt 50°C 75/65-20 W	Output Δt 42,5°C 70/55-20 W	Output Δt 30°C 55/45-20 W	Output Δt 50°C 75/65-20 W	Output Δt 42,5°C 70/55-20 W	Output Δt 30°C 55/45-20 W	Output Δt 50°C 75/65-20 W	Output Δt 42,5°C 70/55-20 W	Output Δt 30°C 55/45-20 W	Output Δt 50°C 75/65-20 W	Output Δt 42,5°C 70/55-20 W	Output Δt 30°C 55/45-20 W
400	outp	228	186	120	293	249	152	379	322	195	540	459	277
	cod.	0181113212			0181343212			0181223212			0181333212		
500	outp	285	232	150	367	312	190	473	402	244	675	574	346
	cod.	0181113215			0181343215			0181223215			0181333215		
600	outp	342	279	180	440	374	228	568	483	293	810	689	416
	cod.	0181113218			0181343218			0181223218			0181333218		
700	outp	399	325	210	513	436	265	663	563	341	945	804	485
	cod.	0181113221			0181343221			0181223221			0181333221		
800	outp	456	372	240	587	499	303	758	644	390	1080	918	554
	cod.	0181113224			0181343224			0181223224			0181333224		
900	outp	513	418	270	660	561	341	852	724	439	1215	1033	624
	cod.	0181113227			0181343227			0181223227			0181333227		
1000	outp	570	464	300	734	595	379	947	767	488	1351	1092	693
	cod.	0181113230			0181343230			0181223230			0181333230		
1100	outp	570	464	300	807	686	417	1042	885	537	1486	1263	762
	cod.	0181113233			0181343233			0181223233			0181333233		
1200	outp	684	557	360	880	748	455	1136	966	585	1621	1378	831
	cod.	0181113236			0181343236			0181223236			0181333236		
1400	outp	684	557	360	1027	873	531	1326	1127	683	1891	1607	970
	cod.	0181113242			0181343242			0181223242			0181333242		
1600	outp	912	743	479	1174	998	607	1515	1288	780	2161	1837	1108
	cod.	0181113248			0181343248			0181223248			0181333248		
1800	outp	1026	836	539	1320	1122	683	1704	1449	878	2431	2066	1247
	cod.	0181113254			0181343254			0181223254			0181333254		
2000	outp	1140	929	599	1467	1247	758	1894	1610	976	2701	2296	1386
	cod.	0181113260			0181343260			0181223260			0181333260		
2300	outp	1311	1068	689	1687	1434	872	2178	1851	1122	3106	2640	1593
	cod.	0181113269			0181343269			0181223269			0181333269		
2600	outp	1482	1208	779	1907	1621	986	2462	2093	1268	3511	2985	1801
	cod.	0181113278			0181343278			0181223278			0181333278		
3000	outp	1710	1393	899	2201	1870	1138	2841	2415	1463	4052	3444	2078
	cod.	0181113290			0181343290			0181223290			0181333290		

H 400 - I1 50 / I2 340		11			21			22			33		
Depth (mm)		63			66			100			157		
Exponent (n)		1,264			1,299			1,303			1,312		
Length (mm)		Output Δt 50°C 75/65-20 W	Output Δt 42,5°C 70/55-20 W	Output Δt 30°C 55/45-20 W	Output Δt 50°C 75/65-20 W	Output Δt 42,5°C 70/55-20 W	Output Δt 30°C 55/45-20 W	Output Δt 50°C 75/65-20 W	Output Δt 42,5°C 70/55-20 W	Output Δt 30°C 55/45-20 W	Output Δt 50°C 75/65-20 W	Output Δt 42,5°C 70/55-20 W	Output Δt 30°C 55/45-20 W
400	outp	283	230	148	363	309	187	467	397	240	666	567	341
	cod.	0181114212			0181344212			0181224212			0181334212		
500	outp	354	287	185	454	386	234	584	496	300	833	708	426
	cod.	0181114215			0181344215			0181224215			0181334215		
600	outp	428	345	223	545	463	281	700	595	360	1000	850	511
	cod.	0181114218			0181344218			0181224218			0181334218		
700	outp	495	402	260	635	540	327	817	694	420	1166	991	597
	cod.	0181114221			0181344221			0181224221			0181334221		
800	outp	566	459	297	726	617	374	934	794	480	1333	1133	682
	cod.	0181114224			0181344224			0181224224			0181334224		
900	outp	637	517	334	817	694	421	1050	893	540	1500	1275	767
	cod.	0181114227			0181344227			0181224227			0181334227		
1000	outp	707	574	371	908	735	468	1167	944	600	1666	1346	852
	cod.	0181114230			0181344230			0181224230			0181334230		
1100	outp	778	632	408	998	849	514	1284	1091	660	1833	1558	937
	cod.	0181114233			0181344233			0181224233			0181334233		
1200	outp	849	689	445	1089	926	561	1400	1190	720	1999	1700	1023
	cod.	0181114236			0181344236			0181224236			0181334236		
1400	outp	991	804	519	1271	1080	655	1634	1389	840	2333	1983	1193
	cod.	0181114242			0181344242			0181224242			0181334242		
1600	outp	1132	919	596	1452	1234	748	1867	1587	960	2666	2266	1364
	cod.	0181114248			0181344248			0181224248			0181334248		
1800	outp	1274	1034	668	1634	1389	842	2101	1786	1080	2999	2549	1534
	cod.	0181114254			0181344254			0181224254			0181334254		
2000	outp	1415	1148	742	1815	1543	935	2334	1984	1200	3332	2833	1704
	cod.	0181114260			0181344260			0181224260			0181334260		
2300	outp	1628	1321	853	2088	1775	1075	2684	2281	1380	3832	3257	1960
	cod.	0181114269			0181344269			0181224269			0181334269		
2600	outp	1840	1493	965	2360	2006	1216	3034	2579	1559	4332	3682	2216
	cod.	0181114278			0181344278			0181224278			0181334278		
3000	outp	2123	1723	1113	2723	2315	1403	3501	2976	1799	4999	4249	2557
	cod.	0181114290			0181344290			0181224290			0181334290		

PLATTELLA V6 L

H 500 - I1 50 / I2 440		11			21			22			33		
Depth (mm)		63			66			100			157		
Exponent (n)		1,270			1,306			1,307			1,318		
Length (mm)		Output Δt 50°C 75/65-20 W	Output Δt 42,5°C 70/55-20 W	Output Δt 30°C 55/45-20 W	Output Δt 50°C 75/65-20 W	Output Δt 42,5°C 70/55-20 W	Output Δt 30°C 55/45-20 W	Output Δt 50°C 75/65-20 W	Output Δt 42,5°C 70/55-20 W	Output Δt 30°C 55/45-20 W	Output Δt 50°C 75/65-20 W	Output Δt 42,5°C 70/55-20 W	Output Δt 30°C 55/45-20 W
400	outp	337	274	176	431	366	221	554	471	284	791	672	403
	cod.	0181115212			0181345212			0181225212			0181335212		
500	outp	421	343	220	538	457	276	693	589	355	989	841	504
	cod.	0181115215			0181345215			0181225215			0181335215		
600	outp	505	411	264	646	549	331	832	707	426	1187	1009	605
	cod.	0181115218			0181345218			0181225218			0181335218		
700	outp	590	480	308	753	640	387	970	825	497	1384	1177	706
	cod.	0181115221			0181345221			0181225221			0181335221		
800	outp	674	548	352	861	732	442	1109	943	569	1582	1345	807
	cod.	0181115224			0181345224			0181225224			0181335224		
900	outp	758	617	396	969	823	497	1247	1060	640	1780	1513	908
	cod.	0181115227			0181345227			0181225227			0181335227		
1000	outp	842	685	440	1076	870	552	1386	1121	711	1978	1596	1008
	cod.	0181115230			0181345230			0181225230			0181335230		
1100	outp	927	754	484	1184	1006	607	1525	1296	782	2175	1849	1109
	cod.	0181115233			0181345233			0181225233			0181335233		
1200	outp	1011	822	528	1292	1098	663	1663	1414	853	2373	2017	1210
	cod.	0181115236			0181345236			0181225236			0181335236		
1400	outp	1179	959	616	1507	1281	773	1941	1649	995	2769	2353	1412
	cod.	0181115242			0181345242			0181225242			0181335242		
1600	outp	1348	1096	704	1722	1464	884	2218	1885	1137	3164	2690	1614
	cod.	0181115248			0181345248			0181225248			0181335248		
1800	outp	1516	1233	792	1937	1647	994	2495	2121	1279	3560	3026	1815
	cod.	0181115254			0181345254			0181225254			0181335254		
2000	outp	1685	1370	880	2153	1830	1104	2772	2356	1421	3955	3362	2017
	cod.	0181115260			0181345260			0181225260			0181335260		
2300	outp	1937	1576	1012	2475	2104	1270	3188	2710	1635	4549	3866	2319
	cod.	0181115269			0181345269			0181225269			0181335269		
2600	outp	2190	1781	1144	2798	2379	1436	3604	3063	1848	5142	4371	2622
	cod.	0181115278			0181345278			0181225278			0181335278		
3000	outp	2527	2056	1320	3229	2745	1657	4158	3535	2132	5933	5043	3025
	cod.	0181115290			0181345290			0181225290			0181335290		

H 600 - I1 50 / I2 540		11			21			22			33		
Depth (mm)		63			66			100			157		
Exponent (n)		1,276			1,313			1,312			1,324		
Length (mm)		Output Δt 50°C 75/65-20 W	Output Δt 42,5°C 70/55-20 W	Output Δt 30°C 55/45-20 W	Output Δt 50°C 75/65-20 W	Output Δt 42,5°C 70/55-20 W	Output Δt 30°C 55/45-20 W	Output Δt 50°C 75/65-20 W	Output Δt 42,5°C 70/55-20 W	Output Δt 30°C 55/45-20 W	Output Δt 50°C 75/65-20 W	Output Δt 42,5°C 70/55-20 W	Output Δt 30°C 55/45-20 W
400	outp	391	318	204	497	422	254	643	547	329	916	779	466
	cod.	0181116212			0181346212			0181226212			0181336212		
500	outp	489	397	255	621	582	318	804	684	411	1145	973	582
	cod.	0181116215			0181346215			0181226215			0181336215		
600	outp	586	477	305	745	634	381	965	820	494	1374	1168	699
	cod.	0181116218			0181346218			0181226218			0181336218		
700	outp	684	556	356	870	739	445	1126	957	576	1603	1363	815
	cod.	0181116221			0181346221			0181226221			0181336221		
800	outp	782	635	407	994	845	508	1287	1094	658	1832	1558	932
	cod.	0181116224			0181346224			0181226224			0181336224		
900	outp	880	715	458	1118	950	572	1448	1230	740	2061	1752	1048
	cod.	0181116227			0181346227			0181226227			0181336227		
1000	outp	977	794	509	1242	1003	653	1608	1299	823	2290	1847	1164
	cod.	0181116230			0181346230			0181226230			0181336230		
1100	outp	1075	874	560	1367	1162	699	1769	1504	905	2520	2142	1281
	cod.	0181116233			0181346233			0181226233			0181336233		
1200	outp	1173	953	611	1491	1267	762	1930	1641	987	2749	2336	1397
	cod.	0181116236			0181346236			0181226236			0181336236		
1400	outp	1368	1112	713	1739	1478	889	2252	1914	1152	3207	2726	1630
	cod.	0181116242			0181346242			0181226242			0181336242		
1600	outp	1564	1271	815	1988	1690	1016	2573	2187	1316	3665	3115	1863
	cod.	0181116248			0181346248			0181226248			0181336248		
1800	outp	1759	1430	916	2236	1901	1143	2895	2461	1481	4123	3504	2096
	cod.	0181116254			0181346254			0181226254			0181336254		
2000	outp	1955	1589	1018	2485	2112	1270	3217	2734	1645	4581	3894	2329
	cod.	0181116260			0181346260			0181226260			0181336260		
2300	outp	2248	1827	1171	2857	2429	1461	3699	3144	1892	5268	4478	2678
	cod.	0181116269			0181346269			0181226269			0181336269		
2600	outp	2541	2065	1324	3230	2745	1651	4182	3555	2139	5955	5062	3027
	cod.	0181116278			0181346278			0181226278			0181336278		
3000	outp	2932	2383	1527	3727	3168	1905	4825	4101	2468	6871	5841	3493
	cod.	0181116290			0181346290			0181226290			0181336290		

PLATTELLA V6 L

H 700 - I1 50 / I2 640		11			21			22			33		
Depth (mm)		63			66			100			157		
Exponent (n)		1,280			1,323			1,322			1,336		
Length (mm)		Output Δt 50°C 75/65-20 W	Output Δt 42,5°C 70/55-20 W	Output Δt 30°C 55/45-20 W	Output Δt 50°C 75/65-20 W	Output Δt 42,5°C 70/55-20 W	Output Δt 30°C 55/45-20 W	Output Δt 50°C 75/65-20 W	Output Δt 42,5°C 70/55-20 W	Output Δt 30°C 55/45-20 W	Output Δt 50°C 75/65-20 W	Output Δt 42,5°C 70/55-20 W	Output Δt 30°C 55/45-20 W
400	outp	446	362	232	563	479	286	735	624	374	1043	887	527
	cod.	0181117212			0181347212			0181227212			0181337212		
500	outp	557	452	290	704	598	358	918	780	467	1304	1109	659
	cod.	0181117215			0181347215			0181227215			0181337215		
600	outp	668	543	347	844	718	429	1102	937	561	1565	1330	791
	cod.	0181117218			0181347218			0181227218			0181337218		
700	outp	780	633	405	985	837	501	1285	1093	654	1826	1552	922
	cod.	0181117221			0181347221			0181227221			0181337221		
800	outp	891	724	463	1126	957	573	1469	1249	747	2087	1774	1054
	cod.	0181117224			0181347224			0181227224			0181337224		
900	outp	1003	814	521	1267	1077	644	1653	1405	841	2347	1995	1186
	cod.	0181117227			0181347227			0181227227			0181337227		
1000	outp	1114	905	579	1407	1135	716	1836	1481	934	2608	2099	1318
	cod.	0181117230			0181347230			0181227230			0181337230		
1100	outp	1225	995	637	1548	1316	787	2020	1717	1028	2869	2439	1449
	cod.	0181117233			0181347233			0181227233			0181337233		
1200	outp	1337	1085	695	1689	1436	859	2204	1873	1121	3130	2660	1581
	cod.	0181117236			0181347236			0181227236			0181337236		
1400	outp	1559	1266	811	1970	1675	1002	2571	2185	1308	3652	3104	1845
	cod.	0181117242			0181347242			0181227242			0181337242		
1600	outp	1782	1447	926	2252	1914	1145	2938	2497	1495	4173	3547	2108
	cod.	0181117248			0181347248			0181227248			0181337248		
1800	outp	2005	1628	1042	2533	2153	1288	3305	2810	1682	4695	3991	2372
	cod.	0181117254			0181347254			0181227254			0181337254		
2000	outp	2228	1809	1158	2815	2393	1432	3673	3122	1869	5216	4431	2635
	cod.	0181117260			0181347260			0181227260			0181337260		
2300	outp	2562	2081	1332	3237	2752	1646	4224	3590	2149	5999	5099	3030
	cod.	0181117269			0181347269			0181227269			0181337269		
2600	outp	2896	2352	1505	3659	3110	1861	4775	4058	2429	6781	5764	3426
	cod.	0181117278			0181347278			0181227278			0181337278		
3000	outp	3342	2714	1737	4222	3589	2147	5509	4683	2803	7825	6651	3953
	cod.	0181117290			0181347290			0181227290			0181337290		

H 900 - I1 50 / I2 840		11			21			22			33		
Depth (mm)		63			66			100			157		
Exponent (n)		1,288			1,343			1,343			1,361		
Length (mm)		Output Δt 50°C 75/65-20 W	Output Δt 42,5°C 70/55-20 W	Output Δt 30°C 55/45-20 W	Output Δt 50°C 75/65-20 W	Output Δt 42,5°C 70/55-20 W	Output Δt 30°C 55/45-20 W	Output Δt 50°C 75/65-20 W	Output Δt 42,5°C 70/55-20 W	Output Δt 30°C 55/45-20 W	Output Δt 50°C 75/65-20 W	Output Δt 42,5°C 70/55-20 W	Output Δt 30°C 55/45-20 W
400	outp	558	453	289	696	591	350	927	788	467	1307	1111	652
	cod.	0181119212			0181349212			0181229212			0181339212		
500	outp	698	566	361	870	739	438	1159	985	583	1634	1389	815
	cod.	0181119215			0181349215			0181229215			0181339215		
600	outp	837	679	433	1044	887	525	1390	1182	700	1961	1667	978
	cod.	0181119218			0181349218			0181229218			0181339218		
700	outp	977	792	505	1218	1035	613	1622	1379	817	2288	1945	1141
	cod.	0181119221			0181349221			0181229221			0181339221		
800	outp	1116	905	578	1392	1183	701	1854	1576	933	2615	2222	1304
	cod.	0181119224			0181349224			0181229224			0181339224		
900	outp	1256	1018	650	1566	1331	788	2085	1773	1050	2942	2500	1467
	cod.	0181119227			0181349227			0181229227			0181339227		
1000	outp	1395	1131	722	1740	1398	876	2317	1863	1167	3268	2619	1630
	cod.	0181119230			0181349230			0181229230			0181339230		
1100	outp	1535	1244	794	1914	1627	963	2549	2166	1283	3595	3056	1793
	cod.	0181119233			0181349233			0181229233			0181339233		
1200	outp	1674	1358	867	2088	1774	1051	2781	2363	1400	3922	3334	1956
	cod.	0181119236			0181349236			0181229236			0181339236		
1400	outp	1953	1584	1011	2436	2070	1226	3244	2757	1633	4576	3889	2282
	cod.	0181119242			0181349242			0181229242			0181339242		
1600	outp	2232	1810	1155	2784	2366	1401	3707	3151	1867	5229	4445	2608
	cod.	0181119248			0181349248			0181229248			0181339248		
1800	outp	2511	2036	1300	3131	2662	1576	4171	3545	2100	5883	5001	2934
	cod.	0181119254			0181349254			0181229254			0181339254		
2000	outp	2790	2263	1444	3479	2957	1751	4634	3939	2333	6537	5556	3260
	cod.	0181119260			0181349260			0181229260			0181339260		
2300	outp	3209	2602	1661	4001	3401	2014	5329	4530	2683	7517	6390	3749
	cod.	0181119269			0181349269			0181229269			0181339269		
2600	outp	3627	2941	1877	4523	3845	2277	6024	5121	3033	8498	7223	4238
	cod.	0181119278			0181349278			0181229278			0181339278		
3000	outp	4185	3394	2166	5219	4436	2627	6951	5909	3500	9805	8334	4890
	cod.	0181119290			0181349290			0181229290			0181339290		

Note

PLATTELLA V6 C

Image for illustrative purposes only

Technical specifications
Material: UNI EN 10130:2007 steel
Channel pitch 33.33 mm
Connection thread 1/2" G - 3/4" G
Working pressure 10 bars
Test pressure 13 bars
Max. operating temperature 110°C
3-phase painting process:
- hot pretreatment and phosphatization
- electrophoretic dip base coat
- epoxy powder finish coat

Standard connections and accessories
Plattella with central connection is delivered with:
- top grille
- screw-on side panels for greater safety
- 4 x 1/2" side connections
- 2 x 3/4" central bottom connections, external thread, 50 mm pipe centre
- 3 x 1/2" blind plugs
- 1 x 1/2" vent plug

The product comes with pre-installed plastic covers that must be removed before installation and, if necessary, replaced with caps that can be purchased separately.

Fixing kit not supplied.

Thermostatic insert and thermostatic head can be ordered separately.

PLATTELLA V6 C

Front view

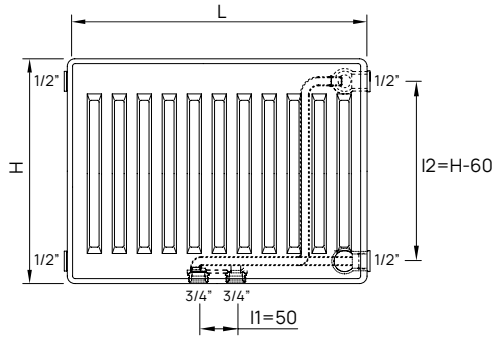

Rear view mod. 11

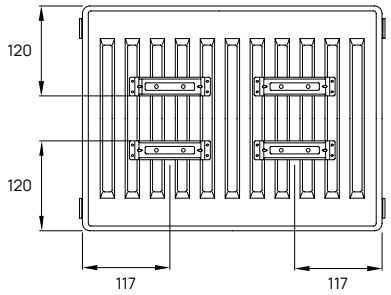

Top view

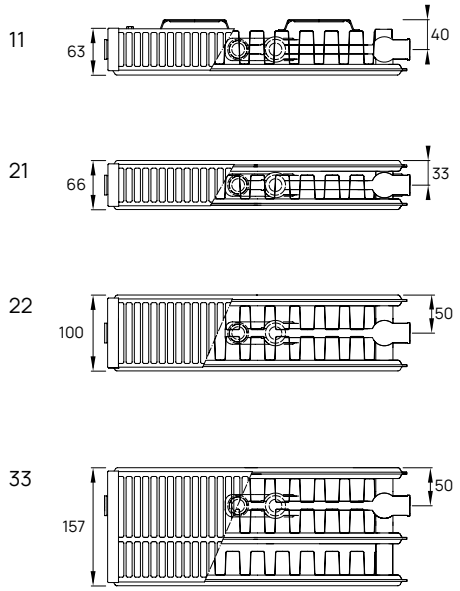

Dimensions are in millimeters (mm)

Configurations

In Out

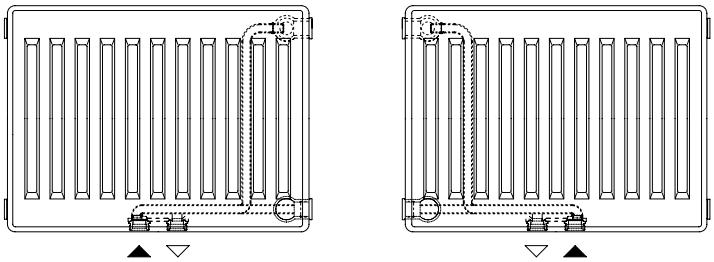

Reversibility only for models 21 - 22

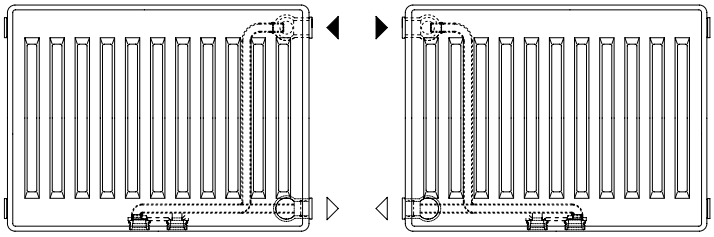

Reversibility only for models 21 - 22

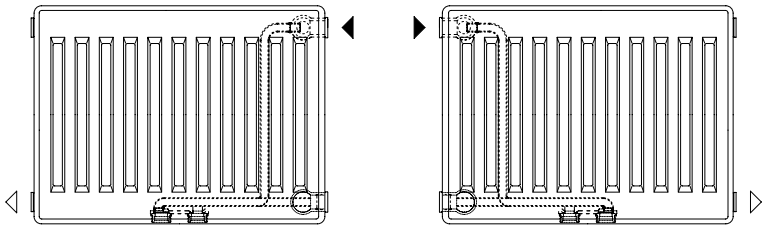

Reversibility only for models 21 - 22

PLATTELLA V6 C

H 300 - I1 50 / I2 240		11			21			22			33		
Depth (mm)		63			66			100			157		
Exponent (n)		1,257			1,291			1,298			1,306		
Length (mm)		Output Δt 50°C 75/65-20 W	Output Δt 42,5°C 70/55-20 W	Output Δt 30°C 55/45-20 W	Output Δt 50°C 75/65-20 W	Output Δt 42,5°C 70/55-20 W	Output Δt 30°C 55/45-20 W	Output Δt 50°C 75/65-20 W	Output Δt 42,5°C 70/55-20 W	Output Δt 30°C 55/45-20 W	Output Δt 50°C 75/65-20 W	Output Δt 42,5°C 70/55-20 W	Output Δt 30°C 55/45-20 W
400	outp	228	186	120	293	249	152	379	322	195	540	459	277
	cod.	0H10253512			0H10653512			0H10553512			0H10753512		
500	outp	285	232	150	367	312	190	473	402	244	675	574	346
	cod.	0H10253515			0H10653515			0H10553515			0H10753515		
600	outp	342	279	180	440	374	228	568	483	293	810	689	416
	cod.	0H10253518			0H10653518			0H10553518			0H10753518		
700	outp	399	325	210	513	436	265	663	563	341	945	804	485
	cod.	0H10253521			0H10653521			0H10553521			0H10753521		
800	outp	456	372	240	587	499	303	758	644	390	1080	918	554
	cod.	0H10253524			0H10653524			0H10553524			0H10753524		
900	outp	513	418	270	660	561	341	852	724	439	1215	1033	624
	cod.	0H10253527			0H10653527			0H10553527			0H10753527		
1000	outp	570	464	300	734	595	379	947	767	488	1351	1092	693
	cod.	0H10253530			0H10653530			0H10553530			0H10753530		
1100	outp	570	464	300	807	686	417	1042	885	537	1486	1263	762
	cod.	0H10253533			0H10653533			0H10553533			0H10753533		
1200	outp	684	557	360	880	748	455	1136	966	585	1621	1378	831
	cod.	0H10253536			0H10653536			0H10553536			0H10753536		
1400	outp	684	557	360	1027	873	531	1326	1127	683	1891	1607	970
	cod.	0H10253542			0H10653542			0H10553542			0H10753542		
1600	outp	912	743	479	1174	998	607	1515	1288	780	2161	1837	1108
	cod.	0H10253548			0H10653548			0H10553548			0H10753548		
1800	outp	1026	836	539	1320	1122	683	1704	1449	878	2431	2066	1247
	cod.	0H10253554			0H10653554			0H10553554			0H10753554		
2000	outp	1140	929	599	1467	1247	758	1894	1610	976	2701	2296	1386
	cod.	0H10253560			0H10653560			0H10553560			0H10753560		
2300	outp	1311	1068	689	1687	1434	872	2178	1851	1122	3106	2640	1593
	cod.	0H10253569			0H10653569			0H10553569			0H10753569		
2600	outp	1482	1208	779	1907	1621	986	2462	2093	1268	3511	2985	1801
	cod.	0H10253578			0H10653578			0H10553578			0H10753578		
3000	outp	1710	1393	899	2201	1870	1138	2841	2415	1463	4052	3444	2078
	cod.	0H10253590			0H10653590			0H10553590			0H10753590		

H 400 - I1 50 / I2 340		11			21			22			33		
Depth (mm)		63			66			100			157		
Exponent (n)		1,264			1,299			1,303			1,312		
Length (mm)		Output Δt 50°C 75/65-20 W	Output Δt 42,5°C 70/55-20 W	Output Δt 30°C 55/45-20 W	Output Δt 50°C 75/65-20 W	Output Δt 42,5°C 70/55-20 W	Output Δt 30°C 55/45-20 W	Output Δt 50°C 75/65-20 W	Output Δt 42,5°C 70/55-20 W	Output Δt 30°C 55/45-20 W	Output Δt 50°C 75/65-20 W	Output Δt 42,5°C 70/55-20 W	Output Δt 30°C 55/45-20 W
400	outp	283	230	148	363	309	187	467	397	240	666	567	341
	cod.	0H10254512			0H10654512			0H10554512			0H10754512		
500	outp	354	287	185	454	386	234	584	496	300	833	708	426
	cod.	0H10254515			0H10654515			0H10554515			0H10754515		
600	outp	428	345	223	545	463	281	700	595	360	1000	850	511
	cod.	0H10254518			0H10654518			0H10554518			0H10754518		
700	outp	495	402	260	635	540	327	817	694	420	1166	991	597
	cod.	0H10254521			0H10654521			0H10554521			0H10754521		
800	outp	566	459	297	726	617	374	934	794	480	1333	1133	682
	cod.	0H10254524			0H10654524			0H10554524			0H10754524		
900	outp	637	517	334	817	694	421	1050	893	540	1500	1275	767
	cod.	0H10254527			0H10654527			0H10554527			0H10754527		
1000	outp	707	574	371	908	735	468	1167	944	600	1666	1346	852
	cod.	0H10254530			0H10654530			0H10554530			0H10754530		
1100	outp	778	632	408	998	849	514	1284	1091	660	1833	1558	937
	cod.	0H10254533			0H10654533			0H10554533			0H10754533		
1200	outp	849	689	445	1089	926	561	1400	1190	720	1999	1700	1023
	cod.	0H10254536			0H10654536			0H10554536			0H10754536		
1400	outp	991	804	519	1271	1080	655	1634	1389	840	2333	1983	1193
	cod.	0H10254542			0H10654542			0H10554542			0H10754542		
1600	outp	1132	919	596	1452	1234	748	1867	1587	960	2666	2266	1364
	cod.	0H10254548			0H10654548			0H10554548			0H10754548		
1800	outp	1274	1034	668	1634	1389	842	2101	1786	1080	2999	2549	1534
	cod.	0H10254554			0H10654554			0H10554554			0H10754554		
2000	outp	1415	1148	742	1815	1543	935	2334	1984	1200	3332	2833	1704
	cod.	0H10254560			0H10654560			0H10554560			0H10754560		
2300	outp	1628	1321	853	2088	1775	1075	2684	2281	1380	3832	3257	1960
	cod.	0H10254569			0H10654569			0H10554569			0H10754569		
2600	outp	1840	1493	965	2360	2006	1216	3034	2579	1559	4332	3682	2216
	cod.	0H10254578			0H10654578			0H10554578			0H10754578		
3000	outp	2123	1723	1113	2723	2315	1403	3501	2976	1799	4999	4249	2557
	cod.	0H10254590			0H10654590			0H10554590			0H10754590		

PLATTELLA V6 C

H 500 - I1 50 / I2 440		11			21			22			33		
Depth (mm)		63			66			100			157		
Exponent (n)		1,270			1,306			1,307			1,318		
Length (mm)		Output Δt 50°C 75/65-20 W	Output Δt 42,5°C 70/55-20 W	Output Δt 30°C 55/45-20 W	Output Δt 50°C 75/65-20 W	Output Δt 42,5°C 70/55-20 W	Output Δt 30°C 55/45-20 W	Output Δt 50°C 75/65-20 W	Output Δt 42,5°C 70/55-20 W	Output Δt 30°C 55/45-20 W	Output Δt 50°C 75/65-20 W	Output Δt 42,5°C 70/55-20 W	Output Δt 30°C 55/45-20 W
400	outp	337	274	176	431	366	221	554	471	284	791	672	403
	cod.	0H10255512			0H10655512			0H10555512			0H10755512		
500	outp	421	343	220	538	457	276	693	589	355	989	841	504
	cod.	0H10255515			0H10655515			0H10555515			0H10755515		
600	outp	505	411	264	646	549	331	832	707	426	1187	1009	605
	cod.	0H10255518			0H10655518			0H10555518			0H10755518		
700	outp	590	480	308	753	640	387	970	825	497	1384	1177	706
	cod.	0H10255521			0H10655521			0H10555521			0H10755521		
800	outp	674	548	352	861	732	442	1109	943	569	1582	1345	807
	cod.	0H10255524			0H10655524			0H10555524			0H10755524		
900	outp	758	617	396	969	823	497	1247	1060	640	1780	1513	908
	cod.	0H10255527			0H10655527			0H10555527			0H10755527		
1000	outp	842	685	440	1076	870	552	1386	1121	711	1978	1596	1008
	cod.	0H10255530			0H10655530			0H10555530			0H10755530		
1100	outp	927	754	484	1184	1006	607	1525	1296	782	2175	1849	1109
	cod.	0H10255533			0H10655533			0H10555533			0H10755533		
1200	outp	1011	822	528	1292	1098	663	1663	1414	853	2373	2017	1210
	cod.	0H10255536			0H10655536			0H10555536			0H10755536		
1400	outp	1179	959	616	1507	1281	773	1941	1649	995	2769	2353	1412
	cod.	0H10255542			0H10655542			0H10555542			0H10755542		
1600	outp	1348	1096	704	1722	1464	884	2218	1885	1137	3164	2690	1614
	cod.	0H10255548			0H10655548			0H10555548			0H10755548		
1800	outp	1516	1233	792	1937	1647	994	2495	2121	1279	3560	3026	1815
	cod.	0H10255554			0H10655554			0H10555554			0H10755554		
2000	outp	1685	1370	880	2153	1830	1104	2772	2356	1421	3955	3362	2017
	cod.	0H10255560			0H10655560			0H10555560			0H10755560		
2300	outp	1937	1576	1012	2475	2104	1270	3188	2710	1635	4549	3866	2319
	cod.	0H10255569			0H10655569			0H10555569			0H10755569		
2600	outp	2190	1781	1144	2798	2379	1436	3604	3063	1848	5142	4371	2622
	cod.	0H10255578			0H10655578			0H10555578			0H10755578		
3000	outp	2527	2056	1320	3229	2745	1657	4158	3535	2132	5933	5043	3025
	cod.	0H10255590			0H10655590			0H10555590			0H10755590		

H 600 - I1 50 / I2 540		11			21			22			33		
Depth (mm)		63			66			100			157		
Exponent (n)		1,276			1,313			1,312			1,324		
Length (mm)		Output Δt 50°C 75/65-20 W	Output Δt 42,5°C 70/55-20 W	Output Δt 30°C 55/45-20 W	Output Δt 50°C 75/65-20 W	Output Δt 42,5°C 70/55-20 W	Output Δt 30°C 55/45-20 W	Output Δt 50°C 75/65-20 W	Output Δt 42,5°C 70/55-20 W	Output Δt 30°C 55/45-20 W	Output Δt 50°C 75/65-20 W	Output Δt 42,5°C 70/55-20 W	Output Δt 30°C 55/45-20 W
400	outp	391	318	204	497	422	254	643	547	329	916	779	466
	cod.	0H10256512			0H10656512			0H10556512			0H10756512		
500	outp	489	397	255	621	582	318	804	684	411	1145	973	582
	cod.	0H10256515			0H10656515			0H10556515			0H10756515		
600	outp	586	477	305	745	634	381	965	820	494	1374	1168	699
	cod.	0H10256518			0H10656518			0H10556518			0H10756518		
700	outp	684	556	356	870	739	445	1126	957	576	1603	1363	815
	cod.	0H102561521			0H10656521			0H10556521			0H10756521		
800	outp	782	635	407	994	845	508	1287	1094	658	1832	1558	932
	cod.	0H10256524			0H10656524			0H10556524			0H10756524		
900	outp	880	715	458	1118	950	572	1448	1230	740	2061	1752	1048
	cod.	0H10256527			0H10656527			0H10556527			0H10756527		
1000	outp	977	794	509	1242	1003	653	1608	1299	823	2290	1847	1164
	cod.	0H10256530			0H10656530			0H10556530			0H10756530		
1100	outp	1075	874	560	1367	1162	699	1769	1504	905	2520	2142	1281
	cod.	0H10256533			0H10656533			0H10556533			0H10756533		
1200	outp	1173	953	611	1491	1267	762	1930	1641	987	2749	2336	1397
	cod.	0H10256536			0H10656536			0H10556536			0H10756536		
1400	outp	1368	1112	713	1739	1478	889	2252	1914	1152	3207	2726	1630
	cod.	0H10256542			0H10656542			0H10556542			0H10756542		
1600	outp	1564	1271	815	1988	1690	1016	2573	2187	1316	3665	3115	1863
	cod.	0H10256548			0H10656548			0H10556548			0H10756548		
1800	outp	1759	1430	916	2236	1901	1143	2895	2461	1481	4123	3504	2096
	cod.	0H10256554			0H10656554			0H10556554			0H10756554		
2000	outp	1955	1589	1018	2485	2112	1270	3217	2734	1645	4581	3894	2329
	cod.	0H10256560			0H10656560			0H10556560			0H10756560		
2300	outp	2248	1827	1171	2857	2429	1461	3699	3144	1892	5268	4478	2678
	cod.	0H10256569			0H10656569			0H10556569			0H10756569		
2600	outp	2541	2065	1324	3230	2745	1651	4182	3555	2139	5955	5062	3027
	cod.	0H10256578			0H10656578			0H10556578			0H10756578		
3000	outp	2932	2383	1527	3727	3168	1905	4825	4101	2468	6871	5841	3493
	cod.	0H10256590			0H10656590			0H10556590			0H10756590		

PLATTELLA V6 C

H 700 - I1 50 / I2 640		11			21			22			33		
Depth (mm)		63			66			100			157		
Exponent (n)		1,280			1,323			1,322			1,336		
Length (mm)		Output Δt 50°C 75/65-20 W	Output Δt 42,5°C 70/55-20 W	Output Δt 30°C 55/45-20 W	Output Δt 50°C 75/65-20 W	Output Δt 42,5°C 70/55-20 W	Output Δt 30°C 55/45-20 W	Output Δt 50°C 75/65-20 W	Output Δt 42,5°C 70/55-20 W	Output Δt 30°C 55/45-20 W	Output Δt 50°C 75/65-20 W	Output Δt 42,5°C 70/55-20 W	Output Δt 30°C 55/45-20 W
400	outp	446	362	232	563	479	286	735	624	374	1043	887	527
	cod.	0H10257512			0H10657512			0H10557512			0H10757512		
500	outp	557	452	290	704	598	358	918	780	467	1304	1109	659
	cod.	0H10257515			0H10657515			0H10557515			0H10757515		
600	outp	668	543	347	844	718	429	1102	937	561	1565	1330	791
	cod.	0H10257518			0H10657518			0H10557518			0H10757518		
700	outp	780	633	405	985	837	501	1285	1093	654	1826	1552	922
	cod.	0H10257521			0H10657521			0H10557521			0H10757521		
800	outp	891	724	463	1126	957	573	1469	1249	747	2087	1774	1054
	cod.	0H10257524			0H10657524			0H10557524			0H10757524		
900	outp	1003	814	521	1267	1077	644	1653	1405	841	2347	1995	1186
	cod.	0H10257527			0H10657527			0H10557527			0H10757527		
1000	outp	1114	905	579	1407	1135	716	1836	1481	934	2608	2099	1318
	cod.	0H10257530			0H10657530			0H10557530			0H10757530		
1100	outp	1225	995	637	1548	1316	787	2020	1717	1028	2869	2439	1449
	cod.	0H10257533			0H10657533			0H10557533			0H10757533		
1200	outp	1337	1085	695	1689	1436	859	2204	1873	1121	3130	2660	1581
	cod.	0H10257536			0H10657536			0H10557536			0H10757536		
1400	outp	1559	1266	811	1970	1675	1002	2571	2185	1308	3652	3104	1845
	cod.	0H10257542			0H10657542			0H10557542			0H10757542		
1600	outp	1782	1447	926	2252	1914	1145	2938	2497	1495	4173	3547	2108
	cod.	0H10257548			0H10657548			0H10557548			0H10757548		
1800	outp	2005	1628	1042	2533	2153	1288	3305	2810	1682	4695	3991	2372
	cod.	0H10257554			0H10657554			0H10557554			0H10757554		
2000	outp	2228	1809	1158	2815	2393	1432	3673	3122	1869	5216	4431	2635
	cod.	0H10257560			0H10657560			0H10557560			0H10757560		
2300	outp	2562	2081	1332	3237	2752	1646	4224	3590	2149	5999	5099	3030
	cod.	0H10257569			0H10657569			0H10557569			0H10757569		
2600	outp	2896	2352	1505	3659	3110	1861	4775	4058	2429	6781	5764	3426
	cod.	0H10257578			0H10657578			0H10557578			0H10757578		
3000	outp	3342	2714	1737	4222	3589	2147	5509	4683	2803	7825	6651	3953
	cod.	0H10257590			0H10657590			0H10557590			0H10757590		

H 900 - I1 50 / I2 840		11			21			22			33		
Depth (mm)		63			66			100			157		
Exponent (n)		1,288			1,343			1,343			1,3614		
Length (mm)		Output Δt 50°C 75/65-20 W	Output Δt 42,5°C 70/55-20 W	Output Δt 30°C 55/45-20 W	Output Δt 50°C 75/65-20 W	Output Δt 42,5°C 70/55-20 W	Output Δt 30°C 55/45-20 W	Output Δt 50°C 75/65-20 W	Output Δt 42,5°C 70/55-20 W	Output Δt 30°C 55/45-20 W	Output Δt 50°C 75/65-20 W	Output Δt 42,5°C 70/55-20 W	Output Δt 30°C 55/45-20 W
400	outp	558	453	289	696	591	350	927	788	467	1307	1111	652
	cod.	0H10259512			0H10659512			0H10559512			0H10759512		
500	outp	698	566	361	870	739	438	1159	985	583	1634	1389	815
	cod.	0H10259515			0H10659515			0H10559515			0H10759515		
600	outp	837	679	433	1044	887	525	1390	1182	700	1961	1667	978
	cod.	0H10259518			0H10659518			0H10559518			0H10759518		
700	outp	977	792	505	1218	1035	613	1622	1379	817	2288	1945	1141
	cod.	0H10259521			0H10659521			0H10559521			0H10759521		
800	outp	1116	905	578	1392	1183	701	1854	1576	933	2615	2222	1304
	cod.	0H10259524			0H10659524			0H10559524			0H10759524		
900	outp	1256	1018	650	1566	1331	788	2085	1773	1050	2942	2500	1467
	cod.	0H10259527			0H10659527			0H10559527			0H10759527		
1000	outp	1395	1131	722	1740	1398	876	2317	1863	1167	3268	2619	1630
	cod.	0H10259530			0H10659530			0H10559530			0H10759530		
1100	outp	1535	1244	794	1914	1627	963	2549	2166	1283	3595	3056	1793
	cod.	0H10259533			0H10659533			0H10559533			0H10759533		
1200	outp	1674	1358	867	2088	1774	1051	2781	2363	1400	3922	3334	1956
	cod.	0H10259536			0H10659536			0H10559536			0H10759536		
1400	outp	1953	1584	1011	2436	2070	1226	3244	2757	1633	4576	3889	2282
	cod.	0H10259542			0H10659542			0H10559542			0H10759542		
1600	outp	2232	1810	1155	2784	2366	1401	3707	3151	1867	5229	4445	2608
	cod.	0H10259548			0H10659548			0H10559548			0H10759548		
1800	outp	2511	2036	1300	3131	2662	1576	4171	3545	2100	5883	5001	2934
	cod.	0H10259554			0H10659554			0H10559554			0H10759554		
2000	outp	2790	2263	1444	3479	2957	1751	4634	3939	2333	6537	5556	3260
	cod.	0H10259560			0H10659560			0H10559560			0H10759560		
2300	outp	3209	2602	1661	4001	3401	2014	5329	4530	2683	7517	6390	3749
	cod.	0H10259569			0H10659569			0H10559569			0H10759569		
2600	outp	3627	2941	1877	4523	3845	2277	6024	5121	3033	8498	7223	4238
	cod.	0H10259578			0H10659578			0H10559578			0H10759578		
3000	outp	4185	3394	2166	5219	4436	2627	6951	5909	3500	9805	8334	4890
	cod.	0H10259590			0H10659590			0H10559590			0H10759590		

Note

PLATTELLA C4 Hygiene

Image for illustrative purposes only

Technical specifications
Material: UNI EN 10130:2007 steel
Channel pitch 33.33 mm
Connection thread 1/2" G
Working pressure 10 bars
Test pressure 13 bars
Max. operating temperature 110°C
3-phase painting process:
- hot pretreatment and phosphatization
- electrophoretic dip base coat
- epoxy powder finish coat

Standard connections and accessories
Plattella C4 Hygiene is delivered with:
- 4 x 1/2" connections and 1 x installation kit including:
- GB brackets
- 1 x 1/2" blind plug
- 1 x 1/2" vent plug

Model 10 does not include brackets.

The product is supplied with pre-assembled plastic lids that must be removed before installation and replaced with the supplied caps.

DL RADIATORS

PLATTELLA C4 Hygiene

Front view

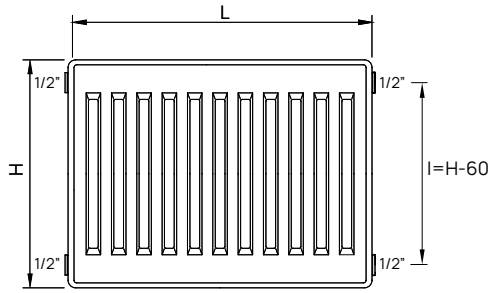

Rear view mod. 20-30

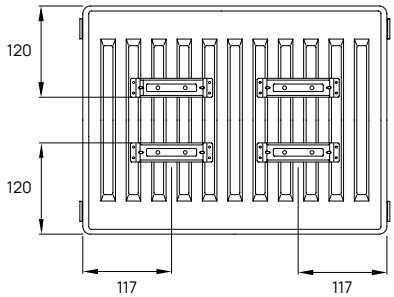

Top view

10

20

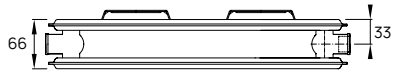

30

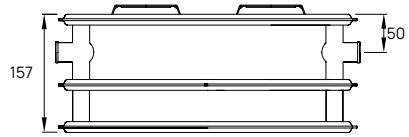

Configurations

◀ In ◁ Out

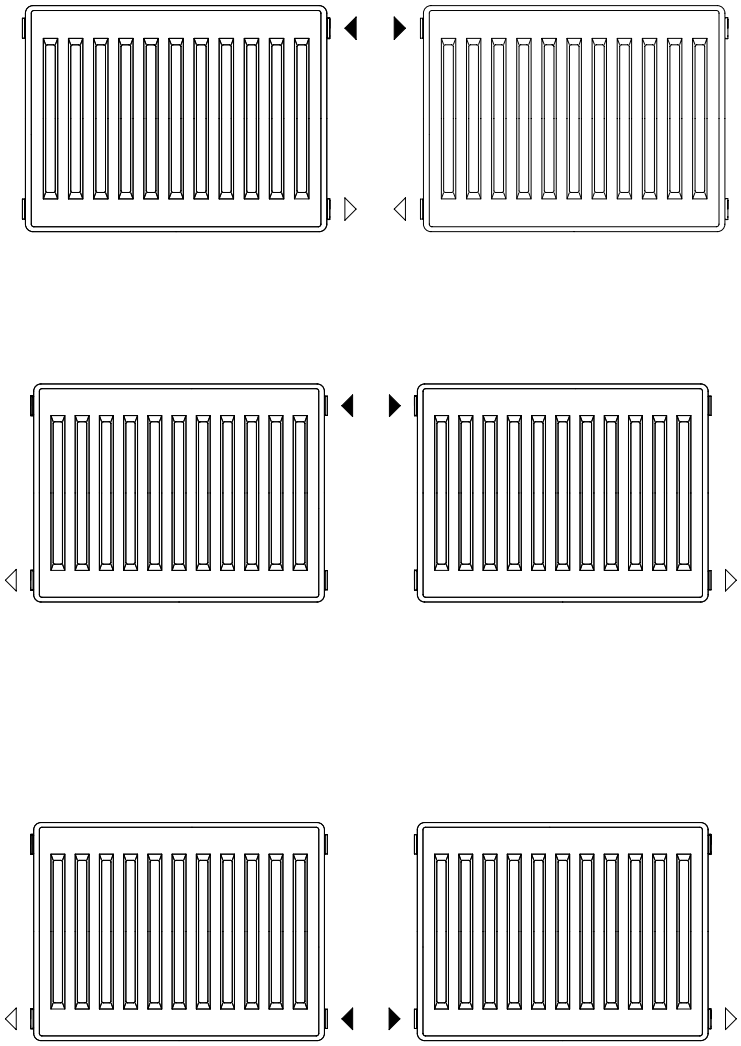

Dimensions are in millimeters (mm)

PLATTELLA C4 Hygiene

H 300 - l 240		10			20			30		
Depth (mm)		63			66			157		
Exponent (n)		1,340			1,276			1,285		
Length (mm)		Output Δt 50°C 75/65-20 W	Output Δt 42,5°C 70/55-20 W	Output Δt 30°C 55/45-20 W	Output Δt 50°C 75/65-20 W	Output Δt 42,5°C 70/55-20 W	Output Δt 30°C 55/45-20 W	Output Δt 50°C 75/65-20 W	Output Δt 42,5°C 70/55-20 W	Output Δt 30°C 55/45-20 W
400	outp	136	110	69	231	188	120	335	272	174
	cod.	0181103012			0181203012			0181303012		
500	outp	170	137	86	289	234	150	419	340	217
	cod.	0181103015			0181203015			0181303015		
600	outp	204	164	103	346	281	180	502	407	260
	cod.	0181103018			0181203018			0181303018		
700	outp	238	192	120	404	328	210	586	475	304
	cod.	0181103021			0181203021			0181303021		
800	outp	272	219	137	462	375	241	670	543	347
	cod.	0181103024			0181203024			0181303024		
900	outp	306	246	155	519	422	271	753	611	391
	cod.	0181103027			0181203027			0181303027		
1000	outp	340	274	172	576	469	300	837	679	434
	cod.	0181103030			0181203030			0181303030		
1100	outp	374	301	189	635	516	331	921	747	477
	cod.	0181103033			0181203033			0181303033		
1200	outp	408	329	206	692	563	361	1004	815	521
	cod.	0181103036			0181203036			0181303036		
1400	outp	476	383	240	808	657	421	1172	951	608
	cod.	0181103042			0181203042			0181303042		
1600	outp	544	438	275	923	750	481	1339	1087	694
	cod.	0181103048			0181203048			0181303048		
1800	outp	612	493	309	1039	844	541	1507	1222	781
	cod.	0181103054			0181203054			0181303054		
2000	outp	680	548	343	1154	938	601	1674	1358	868
	cod.	0181103060			0181203060			0181303060		
2300	outp	782	630	395	1327	1079	692	1925	1562	998
	cod.	0181103069			0181203069			0181303069		
2600	outp	884	712	447	1500	1219	782	2176	1766	1128
	cod.	0181103078			0181203078			0181303078		
3000	outp	1020	822	515	1731	1407	902	2511	2037	1302
	cod.	0181103090			0181203090			0181303090		

H 400 - l 340		10			20			30		
Depth (mm)		63			66			157		
Exponent (n)		1,319			1,280			1,296		
Length (mm)		Output Δt 50°C 75/65-20 W	Output Δt 42,5°C 70/55-20 W	Output Δt 30°C 55/45-20 W	Output Δt 50°C 75/65-20 W	Output Δt 42,5°C 70/55-20 W	Output Δt 30°C 55/45-20 W	Output Δt 50°C 75/65-20 W	Output Δt 42,5°C 70/55-20 W	Output Δt 30°C 55/45-20 W
400	outp	177	142	90	284	230	147	417	338	215
	cod.	0181104012			0181204012			0181304012		
500	outp	221	178	112	355	288	184	522	422	269
	cod.	0181104015			0181204015			0181304015		
600	outp	265	214	135	426	345	221	626	506	323
	cod.	0181104018			0181204018			0181304018		
700	outp	310	249	157	497	403	258	730	591	377
	cod.	0181104021						0181204021		
800	outp	354	285	180	568	460	295	834	675	430
	cod.	0181104024			0181204024			0181304024		
900	outp	398	321	202	639	518	332	939	760	484
	cod.	0181104027			0181204027			0181304027		
1000	outp	442	356	225	709	575	369	1043	844	538
	cod.	0181104030			0181204030			0181304030		
1100	outp	487	392	247	781	633	405	1147	928	592
	cod.	0181104033			0181204033			0181304033		
1200	outp	531	427	270	852	690	442	1252	1013	646
	cod.	0181104036			0181204036			0181304036		
1400	outp	619	499	315	994	805	516	1460	1182	753
	cod.	0181104042			0181204042			0181304042		
1600	outp	708	570	360	1136	921	589	1669	1350	861
	cod.	0181104048			0181204048			0181304048		
1800	outp	796	641	405	1278	1036	663	1877	1519	968
	cod.	0181104054			0181204054			0181304054		
2000	outp	885	712	450	1420	1151	737	2086	1688	1076
	cod.	0181104060			0181204060			0181304060		
2300	outp	1017	819	517	1633	1323	847	2399	1941	1237
	cod.	0181104069			0181204069			0181304069		
2600	outp	1150	926	585	1846	1496	958	2712	2195	1399
	cod.	0181104078			0181204078			0181304078		
3000	outp	1327	1068	675	2130	1726	1105	3129	2532	1614
	cod.	0181104090			0181204090			0181304090		

PLATTELLA C4 Hygiene

H 500 - l 440		10			20			30		
Depth (mm)		63			66			157		
Exponent (n)		1,299			1,284			1,307		
Length (mm)		Output Δt 50°C 75/65-20 W	Output Δt 42,5°C 70/55-20 W	Output Δt 30°C 55/45-20 W	Output Δt 50°C 75/65-20 W	Output Δt 42,5°C 70/55-20 W	Output Δt 30°C 55/45-20 W	Output Δt 50°C 75/65-20 W	Output Δt 42,5°C 70/55-20 W	Output Δt 30°C 55/45-20 W
400	outp	216	175	111	337	273	175	496	401	255
	cod.	0181105012			0181205012			0181305012		
500	outp	270	219	139	422	342	218	621	501	319
	cod.	0181105015			0181205015			0181305015		
600	outp	324	262	167	506	410	262	745	602	382
	cod.	0181105018			0181205018			0181305018		
700	outp	379	306	195	590	478	306	869	702	446
	cod.	0181105021			0181205021			0181305021		
800	outp	433	350	222	674	547	350	993	802	510
	cod.	0181105024			0181205024			0181305024		
900	outp	487	394	250	759	615	393	1117	902	573
	cod.	0181105027			0181205027			0181305027		
1000	outp	541	437	278	843	683	437	1241	1003	637
	cod.	0181105030			0181205030			0181305030		
1100	outp	595	481	306	927	752	481	1365	1103	701
	cod.	0181105033			0181205033			0181305033		
1200	outp	649	525	334	1012	820	524	1489	1203	764
	cod.	0181105036			0181205036			0181305036		
1400	outp	757	612	389	1180	957	612	1737	1404	892
	cod.	0181105042			0181205042			0181305042		
1600	outp	865	700	445	1349	1093	699	1986	1604	1019
	cod.	0181105048			0181205048			0181305048		
1800	outp	973	787	501	1517	1230	786	2234	1805	1147
	cod.	0181105054			0181205054			0181305054		
2000	outp	1082	874	556	1686	1367	874	2482	2005	1274
	cod.	0181105060			0181205060			0181305060		
2300	outp	1244	1006	640	1939	1572	1005	2854	2306	1465
	cod.	0181105069			0181205069			0181305069		
2600	outp	1406	1137	723	2192	1777	1136	3227	2607	1656
	cod.	0181105078			0181205078			0181305078		
3000	outp	1622	1312	834	2529	2050	1311	3723	3008	1911
	cod.	0181105090			0181205090			0181305090		

H 600 - l 540		10			20			30		
Depth (mm)		63			66			157		
Exponent (n)		1,279			1,288			1,318		
Length (mm)		Output Δt 50°C 75/65-20 W	Output Δt 42,5°C 70/55-20 W	Output Δt 30°C 55/45-20 W	Output Δt 50°C 75/65-20 W	Output Δt 42,5°C 70/55-20 W	Output Δt 30°C 55/45-20 W	Output Δt 50°C 75/65-20 W	Output Δt 42,5°C 70/55-20 W	Output Δt 30°C 55/45-20 W
400	outp	254	206	132	392	317	203	574	463	293
	cod.	0181106012			0181206012			0181306012		
500	outp	318	258	165	490	397	254	718	579	366
	cod.	0181106015			0181206015			0181306015		
600	outp	381	310	198	587	476	304	862	695	439
	cod.	0181106018			0181206018			0181306018		
700	outp	445	361	231	685	555	355	1005	810	513
	cod.	0181106021			0181206021			0181306021		
800	outp	509	413	265	783	634	406	1149	926	586
	cod.	0181106024			0181206024			0181306024		
900	outp	572	465	298	881	714	456	1292	1042	659
	cod.	0181106027			0181206027			0181306027		
1000	outp	636	516	331	979	793	507	1436	1158	732
	cod.	0181106030			0181206030			0181306030		
1100	outp	699	568	364	1077	872	558	1580	1273	806
	cod.	0181106033			0181206033			0181306033		
1200	outp	763	619	397	1175	952	608	1723	1389	879
	cod.	0181106036			0181206036			0181306036		
1400	outp	890	723	463	1371	1110	710	2010	1621	1025
	cod.	0181106042			0181206042			0181306042		
1600	outp	1017	826	529	1566	1269	811	2298	1852	1172
	cod.	0181106048			0181206048			0181306048		
1800	outp	1144	929	595	1762	1428	913	2585	2084	1318
	cod.	0181106054			0181206054			0181306054		
2000	outp	1272	1032	661	1958	1586	1014	2872	2315	1465
	cod.	0181106060			0181206060			0181306060		
2300	outp	1462	1187	760	2252	1824	1166	3303	2663	1684
	cod.	0181106069			0181206069			0181306069		
2600	outp	1653	1342	860	2545	2062	1318	3734	3010	1904
	cod.	0181106078			0181206078			0181306078		
3000	outp	1907	1549	992	2937	2379	1521	4308	3473	2197
	cod.	0181106090			0181206090			0181306090		

PLATTELLA C4 Hygiene

H 700 - l 640		10			20			30		
Depth (mm)		63			66			157		
Exponent (n)		1,285			1,290			1,318		
Length (mm)		Output Δt 50°C 75/65-20 W	Output Δt 42,5°C 70/55-20 W	Output Δt 30°C 55/45-20 W	Output Δt 50°C 75/65-20 W	Output Δt 42,5°C 70/55-20 W	Output Δt 30°C 55/45-20 W	Output Δt 50°C 75/65-20 W	Output Δt 42,5°C 70/55-20 W	Output Δt 30°C 55/45-20 W
400	outp	291	237	151	448	363	232	652	527	332
	cod.	0181107012			0181207012			0181307012		
500	outp	364	296	189	560	454	290	815	659	416
	cod.	0181107015			0181207015			0181307015		
600	outp	437	355	227	671	545	347	977	790	499
	cod.	0181107018			0181207018			0181307018		
700	outp	509	414	265	783	636	405	1140	922	582
	cod.	0181107021			0181207021			0181307021		
800	outp	582	473	302	895	726	463	1303	1054	665
	cod.	0181107024			0181207024			0181307024		
900	outp	655	532	340	1007	817	521	1466	1186	748
	cod.	0181107027			0181207027			0181307027		
1000	outp	728	591	378	1119	908	579	1629	1317	831
	cod.	0181107030			0181207030			0181307030		
1100	outp	800	650	416	1231	999	637	1792	1449	914
	cod.	0181107033			0181207033			0181307033		
1200	outp	873	710	454	1343	1090	695	1955	1581	997
	cod.	0181107036			0181207036			0181307036		
1400	outp	1019	828	529	1567	1271	811	2281	1844	1163
	cod.	0181107042			0181207042			0181307042		
1600	outp	1164	946	605	1790	1453	926	2606	2108	1330
	cod.	0181107048			0181207048			0181307048		
1800	outp	1310	1064	680	2014	1634	1042	2932	2371	1496
	cod.	0181107054			0181207054			0181307054		
2000	outp	1455	1183	756	2238	1816	1158	3258	2634	1662
	cod.	0181107060			0181207060			0181307060		
2300	outp	1674	1360	869	2574	2088	1332	3747	3030	1911
	cod.	0181107069			0181207069			0181307069		
2600	outp	1892	1537	983	2909	2361	1505	4235	3425	2161
	cod.	0181107078			0181207078			0181307078		
3000	outp	2183	1774	1134	3357	2724	1737	4887	3952	2493
	cod.	0181107090			0181207090			0181307090		

H 900 - l 840		10			20			30		
Depth (mm)		63			66			157		
Exponent (n)		1,296			1,293			1,316		
Length (mm)		Output Δt 50°C 75/65-20 W	Output Δt 42,5°C 70/55-20 W	Output Δt 30°C 55/45-20 W	Output Δt 50°C 75/65-20 W	Output Δt 42,5°C 70/55-20 W	Output Δt 30°C 55/45-20 W	Output Δt 50°C 75/65-20 W	Output Δt 42,5°C 70/55-20 W	Output Δt 30°C 55/45-20 W
400	outp	361	293	186	567	459	293	806	651	411
	cod.	0181109012			0181209012			0181309012		
500	outp	451	366	233	708	574	366	1007	813	514
	cod.	0181109015			0181209015			0181309015		
600	outp	541	439	280	850	689	439	1208	976	617
	cod.	0181109018			0181209018			0181309018		
700	outp	632	512	326	992	804	512	1410	1139	720
	cod.	0181109021			0181209021			0181309021		
800	outp	722	586	373	1133	919	586	1611	1301	823
	cod.	0181109024			0181209024			0181309024		
900	outp	812	659	420	1275	1034	659	1812	1464	926
	cod.	0181109027			0181209027			0181309027		
1000	outp	902	732	466	1417	1149	732	2014	1627	1028
	cod.	0181109030			0181209030			0181309030		
1100	outp	993	805	513	1558	1263	805	2215	1789	1131
	cod.	0181109033			0181209033			0181309033		
1200	outp	1083	879	559	1700	1378	878	2417	1952	1234
	cod.	0181109036			0181209036			0181309036		
1400	outp	1263	1025	653	1983	1608	1025	2819	2277	1440
	cod.	0181109042			0181209042			0181309042		
1600	outp	1444	1171	746	2267	1838	1171	3222	2603	1646
	cod.	0181109048			0181209048			0181309048		
1800	outp	1624	1318	839	2550	2067	1318	3625	2928	1851
	cod.	0181109054			0181209054			0181309054		
2000	outp	1805	1464	932	2833	2297	1464	4028	3253	2057
	cod.	0181109060			0181209060			0181309060		
2300	outp	2076	1684	1072	3258	2642	1684	4632	3741	2366
	cod.	0181109069			0181209069			0181309069		
2600	outp	2346	1904	1212	3683	2986	1903	5236	4229	2674
	cod.	0181109078			0181209078			0181309078		
3000	outp	2707	2196	1399	4250	3446	2196	6041	4880	3086
	cod.	0181109090			0181209090			0181309090		

Note

PLATTELLA V6 Hygiene

Image for illustrative purposes only

Technical specifications
Material: UNI EN 10130:2007 steel
Channel pitch 33.33 mm
Connection thread 1/2" G
Working pressure 10 bars
Test pressure 13 bars
Max. operating temperature 110°C
3-phase painting process:
- hot pretreatment and phosphatization
- electrophoretic dip base coat
- epoxy powder finish coat

Standard connections and accessories
Plattella V6 Hygiene with right side connection is delivered with:
- 4 x 1/2" connections
- 2 x 3/4" bottom connections, external thread, 50 mm pipe centre
- 3 x 1/2" blind plugs
- 1 x 1/2" vent plug

The product is supplied with pre-assembled plastic lids that must be removed before installation and replaced with the supplied caps.

Fixing kit not supplied.

Thermostatic insert and thermostatic head can be ordered separately.

PLATTELLA V6 Hygiene

Front view

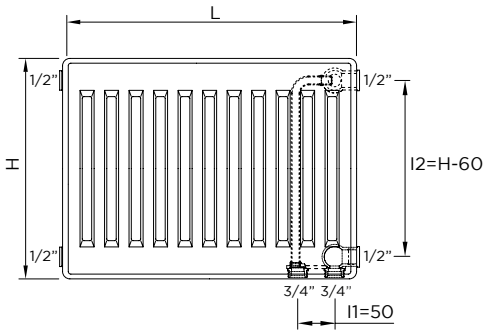

Rear view mod. 20-30

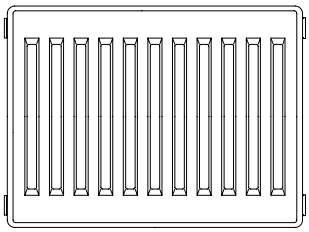

Top view

10

20

30

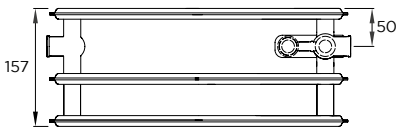

Configurations

In Out

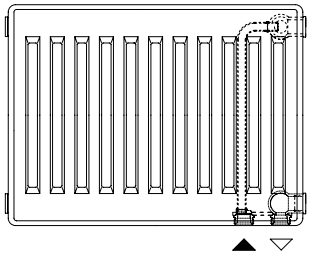

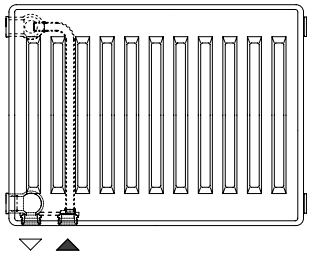

Only for the model 20

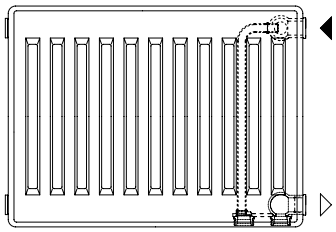

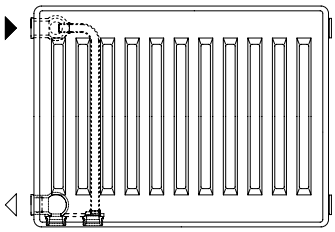

Only for the model 20

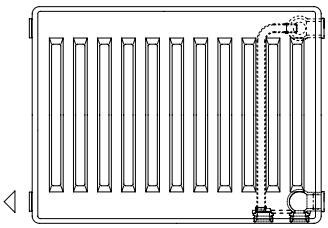

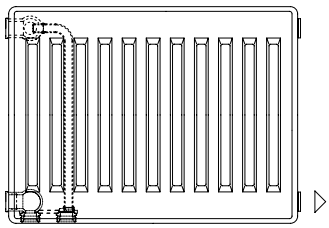

Only for the model 20

Dimensions are in millimeters (mm)

PLATTELLA V6 Hygiene

H 300 - l1 50 / l2 240		10			20			30		
Depth (mm)		63			66			157		
Exponent (n)		1,340			1,276			1,285		
Length (mm)		Output Δt 50°C 75/65-20 W	Output Δt 42,5°C 70/55-20 W	Output Δt 30°C 55/45-20 W	Output Δt 50°C 75/65-20 W	Output Δt 42,5°C 70/55-20 W	Output Δt 30°C 55/45-20 W	Output Δt 50°C 75/65-20 W	Output Δt 42,5°C 70/55-20 W	Output Δt 30°C 55/45-20 W
400	outp	136	110	69	231	188	120	335	272	174
	cod.	0181103212			0181203212			0181303212		
500	outp	170	137	86	289	234	150	419	340	217
	cod.	0181103215			0181203215			0181303215		
600	outp	204	164	103	346	281	180	502	407	260
	cod.	0181103218			0181203218			0181303218		
700	outp	238	192	120	404	328	210	586	475	304
	cod.	0181103221			0181203221			0181303221		
800	outp	272	219	137	462	375	241	670	543	347
	cod.	0181103224			0181203224			0181303224		
900	outp	306	246	155	519	422	271	753	611	391
	cod.	0181103227			0181203227			0181303227		
1000	outp	340	274	172	576	469	300	837	679	434
	cod.	0181103230			0181203230			0181303230		
1100	outp	374	301	189	635	516	331	921	747	477
	cod.	0181103233			0181203233			0181303233		
1200	outp	408	329	206	692	563	361	1004	815	521
	cod.	0181103236			0181203236			0181303236		
1400	outp	476	383	240	808	657	421	1172	951	608
	cod.	0181103242			0181203242			0181303242		
1600	outp	544	438	275	923	750	481	1339	1087	694
	cod.	0181103248			0181203248			0181303248		
1800	outp	612	493	309	1039	844	541	1507	1222	781
	cod.	0181103254			0181203254			0181303254		
2000	outp	680	548	343	1154	938	601	1674	1358	868
	cod.	0181103260			0181203260			0181303260		
2300	outp	782	630	395	1327	1079	692	1925	1562	998
	cod.	0181103269			0181203269			0181303269		
2600	outp	884	712	447	1500	1219	782	2176	1766	1128
	cod.	0181103278			0181203278			0181303278		
3000	outp	1020	822	515	1731	1407	902	2511	2037	1302
	cod.	0181103290			0181203290			0181303290		

H 400 - l1 50 / l2 340		10			20			30		
Depth (mm)		63			66			157		
Exponent (n)		1,319			1,280			1,296		
Length (mm)		Output Δt 50°C 75/65-20 W	Output Δt 42,5°C 70/55-20 W	Output Δt 30°C 55/45-20 W	Output Δt 50°C 75/65-20 W	Output Δt 42,5°C 70/55-20 W	Output Δt 30°C 55/45-20 W	Output Δt 50°C 75/65-20 W	Output Δt 42,5°C 70/55-20 W	Output Δt 30°C 55/45-20 W
400	outp	177	142	90	284	230	147	417	338	215
	cod.	0181104212			0181204212			0181304212		
500	outp	221	178	112	355	288	184	522	422	269
	cod.	0181104215			0181204215			0181304215		
600	outp	265	214	135	426	345	221	626	506	323
	cod.	0181104218			0181204218			0181304218		
700	outp	310	249	157	497	403	258	730	591	377
	cod.	0181104221			0181204221			0181304221		
800	outp	354	285	180	568	460	295	834	675	430
	cod.	0181104224			0181204224			0181304224		
900	outp	398	321	202	639	518	332	939	760	484
	cod.	0181104227			0181204227			0181304227		
1000	outp	442	356	225	709	575	369	1043	844	538
	cod.	0181104230			0181204230			0181304230		
1100	outp	487	392	247	781	633	405	1147	928	592
	cod.	0181104233			0181204233			0181304233		
1200	outp	531	427	270	852	690	442	1252	1013	646
	cod.	0181104236			0181204236			0181304236		
1400	outp	619	499	315	994	805	516	1460	1182	75
	cod.	0181104242			0181204242			0181304242		
1600	outp	708	570	360	1136	921	589	1669	1350	861
	cod.	0181104248			0181204248			0181304248		
1800	outp	796	641	405	1278	1036	663	1877	1519	986
	cod.	0181104254			0181204254			0181304254		
2000	outp	885	712	450	1420	1151	737	2086	1688	1076
	cod.	0181104260			0181204260			0181304260		
2300	outp	1017	819	517	1633	1323	847	2399	1941	1237
	cod.	0181104269			0181204269			0181304269		
2600	outp	1150	926	585	1846	1496	958	2712	2195	1399
	cod.	0181104278			0181204278			0181304278		
3000	outp	1327	1068	675	2130	1726	1105	3129	2532	1614
	cod.	0181104290			0181204290			0181304290		

PLATTELLA V6 Hygiene

H 500 - I1 50 / I2 440		10			20			30		
Depth (mm)		63			66			157		
Exponent (n)		1,299			1,284			1,307		
Length (mm)		Output Δt 50°C 75/65-20 W	Output Δt 42,5°C 70/55-20 W	Output Δt 30°C 55/45-20 W	Output Δt 50°C 75/65-20 W	Output Δt 42,5°C 70/55-20 W	Output Δt 30°C 55/45-20 W	Output Δt 50°C 75/65-20 W	Output Δt 42,5°C 70/55-20 W	Output Δt 30°C 55/45-20 W
400	outp	216	175	111	337	273	175	496	401	255
	cod.	0181105212			0181205212			0181305212		
500	outp	270	219	139	422	342	218	621	501	319
	cod.	0181105215			0181205215			0181305215		
600	outp	324	262	167	506	410	262	745	602	382
	cod.	0181105218			0181205218			0181305218		
700	outp	379	306	195	590	478	306	869	702	446
	cod.	0181105221			0181205221			0181305221		
800	outp	433	350	222	674	547	350	993	802	510
	cod.	0181105224			0181205224			0181305224		
900	outp	487	394	250	759	615	393	1117	902	573
	cod.	0181105227			0181205227			0181305227		
1000	outp	541	437	278	843	683	437	1241	1003	637
	cod.	0181105230			0181205230			0181305230		
1100	outp	595	481	306	927	752	481	1365	1103	701
	cod.	0181105233			0181205233			0181305233		
1200	outp	649	525	334	1012	820	524	1489	1203	764
	cod.	0181105236			0181205236			0181305236		
1400	outp	757	612	389	1180	957	612	1737	1404	892
	cod.	0181105242			0181205242			0181305242		
1600	outp	865	700	445	1349	1093	699	1986	1604	1019
	cod.	0181105248			0181205248			0181305248		
1800	outp	973	787	501	1517	1230	786	2234	1805	1147
	cod.	0181105254			0181205254			0181305254		
2000	outp	1082	874	556	1686	1367	874	2482	2005	1274
	cod.	0181105260			0181205260			0181305260		
2300	outp	1244	1006	640	1939	1572	1005	2854	2306	1465
	cod.	0181105269			0181205269			0181305269		
2600	outp	1406	1137	723	2192	1777	1136	3227	2607	1656
	cod.	0181105278			0181205278			0181305278		
3000	outp	1622	1312	834	2529	2050	1311	3723	3008	1911
	cod.	0181105290			0181205290			0181305290		

H 600 - I1 50 / I2 540		10			20			30		
Depth (mm)		63			66			157		
Exponent (n)		1,279			1,288			1,318		
Length (mm)		Output Δt 50°C 75/65-20 W	Output Δt 42,5°C 70/55-20 W	Output Δt 30°C 55/45-20 W	Output Δt 50°C 75/65-20 W	Output Δt 42,5°C 70/55-20 W	Output Δt 30°C 55/45-20 W	Output Δt 50°C 75/65-20 W	Output Δt 42,5°C 70/55-20 W	Output Δt 30°C 55/45-20 W
400	outp	254	206	132	392	317	203	574	463	293
	cod.	0181106212			0181206212			0181306212		
500	outp	318	258	165	490	397	254	718	579	366
	cod.	0181106215			0181206215			0181306215		
600	outp	381	310	198	587	476	304	862	695	439
	cod.	0181106218			0181206218			0181306218		
700	outp	445	361	231	685	555	355	1005	810	513
	cod.	0181106221			0181206221			0181306221		
800	outp	509	413	265	783	634	406	1149	926	586
	cod.	0181106224			0181206224			0181306224		
900	outp	572	465	298	881	714	456	1292	1042	659
	cod.	0181106227			0181206227			0181306227		
1000	outp	636	516	331	979	793	507	1436	1158	732
	cod.	0181106230			0181206230			0181306230		
1100	outp	699	568	364	1077	872	558	1580	1273	806
	cod.	0181106233			0181206233			0181306233		
1200	outp	763	619	397	1175	952	608	1723	1389	879
	cod.	0181106236			0181206236			0181306236		
1400	outp	890	723	463	1371	1110	710	2010	1621	1025
	cod.	0181106242			0181206242			0181306242		
1600	outp	1017	826	529	1566	1269	811	2298	1852	1172
	cod.	0181106248			0181206248			0181306248		
1800	outp	1144	929	595	1762	1428	913	2585	2084	1318
	cod.	0181106254			0181206254			0181306254		
2000	outp	1272	1032	661	1958	1586	1014	2872	2315	1465
	cod.	0181106260			0181206260			0181306260		
2300	outp	1462	1187	760	2252	1824	1166	3303	2663	1684
	cod.	0181106269			0181206269			0181306269		
2600	outp	1653	1342	860	2545	2062	1318	3734	3010	1904
	cod.	0181106278			0181206278			0181306278		
3000	outp	1907	1549	992	2937	2379	1521	4308	3473	2197
	cod.	0181106290			0181206290			0181306290		

PLATTELLA V6 Hygiene

H 700 - I1 50 / I2 640		10			20			30		
Depth (mm)		63			66			157		
Exponent (n)		1,285			1,290			1,318		
Length (mm)		Output Δt 50°C 75/65-20 W	Output Δt 42,5°C 70/55-20 W	Output Δt 30°C 55/45-20 W	Output Δt 50°C 75/65-20 W	Output Δt 42,5°C 70/55-20 W	Output Δt 30°C 55/45-20 W	Output Δt 50°C 75/65-20 W	Output Δt 42,5°C 70/55-20 W	Output Δt 30°C 55/45-20 W
400	outp	291	237	151	448	363	232	652	527	332
	cod.	0181107212			0181207212			0181307212		
500	outp	364	296	189	560	454	290	815	659	416
	cod.	0181107215			0181207215			0181307215		
600	outp	437	355	227	671	545	347	977	790	499
	cod.	0181107218			0181207218			0181307218		
700	outp	509	414	265	783	636	405	1140	922	582
	cod.	0181107221			0181207221			0181307221		
800	outp	582	473	302	895	726	463	1303	1054	665
	cod.	0181107224			0181207224			0181307224		
900	outp	655	532	340	1007	817	521	1466	1186	748
	cod.	0181107227			0181207227			0181307227		
1000	outp	728	591	378	1119	908	579	1629	1317	831
	cod.	0181107230			0181207230			0181307230		
1100	outp	800	650	416	1231	999	637	1792	1449	914
	cod.	0181107233			0181207233			0181307233		
1200	outp	873	710	454	1343	1090	695	1955	1581	997
	cod.	0181107236			0181207236			0181307236		
1400	outp	1019	828	529	1567	1271	811	2281	1844	1163
	cod.	0181107242			0181207242			0181307242		
1600	outp	1164	946	605	1790	1453	926	2606	2108	1330
	cod.	0181107248			0181207248			0181307248		
1800	outp	1310	1064	680	2014	1634	1042	2932	2371	1496
	cod.	0181107254			0181207254			0181307254		
2000	outp	1455	1183	756	2238	1816	1158	3258	2634	1662
	cod.	0181107260			0181207260			0181307260		
2300	outp	1674	1360	869	2574	2088	1332	3747	3030	1911
	cod.	0181107269			0181207269			0181307269		
2600	outp	1892	1537	983	2909	2361	1505	4235	3425	2161
	cod.	0181107278			0181207278			0181307278		
3000	outp	2183	1774	1134	3357	2724	1737	4887	3952	2493
	cod.	0181107290			0181207290			0181307290		

H 900 - I1 50 / I2 840		10			20			30		
Depth (mm)		63			66			157		
Exponent (n)		1,296			1,293			1,316		
Length (mm)		Output Δt 50°C 75/65-20 W	Output Δt 42,5°C 70/55-20 W	Output Δt 30°C 55/45-20 W	Output Δt 50°C 75/65-20 W	Output Δt 42,5°C 70/55-20 W	Output Δt 30°C 55/45-20 W	Output Δt 50°C 75/65-20 W	Output Δt 42,5°C 70/55-20 W	Output Δt 30°C 55/45-20 W
400	outp	361	293	186	567	459	293	806	651	411
	cod.	0181109212			0181209212			0181309212		
500	outp	451	366	233	708	574	366	1007	813	514
	cod.	0181109215			0181209215			0181309215		
600	outp	541	439	280	850	689	439	1208	976	617
	cod.	0181109218			0181209218			0181309218		
700	outp	632	512	326	992	804	512	1410	1139	720
	cod.	0181109221			0181209221			0181309221		
800	outp	722	586	373	1133	919	586	1611	1301	823
	cod.	0181109224			0181209224			0181309224		
900	outp	812	659	420	1275	1034	659	1812	1464	926
	cod.	0181109227			0181209227			0181309227		
1000	outp	902	732	466	1417	1149	732	2014	1627	1028
	cod.	0181109230			0181209230			0181309230		
1100	outp	993	805	513	1558	1263	805	2215	1789	1131
	cod.	0181109233			0181209233			0181309233		
1200	outp	1083	879	559	1700	1378	878	2417	1952	1234
	cod.	0181109236			0181209236			0181309236		
1400	outp	1263	1025	653	1983	1608	1025	2819	2277	1440
	cod.	0181109242			0181209242			0181309242		
1600	outp	1444	1171	746	2267	1838	1171	3222	2603	1646
	cod.	0181109248			0181209248			0181309248		
1800	outp	1624	1318	839	2550	2067	1318	3625	2928	1851
	cod.	0181109254			0181209254			0181309254		
2000	outp	1805	1464	932	2833	2297	1464	4028	3253	2057
	cod.	0181109260			0181209260			0181309260		
2300	outp	2076	1684	1072	3258	2642	1684	4632	3741	2366
	cod.	0181109269			0181209269			0181309269		
2600	outp	2346	1904	1212	3683	2986	1903	5236	4229	2674
	cod.	0181109278			0181209278			0181309278		
3000	outp	2707	2196	1399	4250	3446	2196	6041	4880	3086
	cod.	0181109290			0181209290			0181309290		

Note

PLATTELLA C6 Vertical

Image for illustrative purposes only

Technical specifications
Material: UNI EN 10130:2007 steel
Channel pitch 33.33 mm
Connection thread 1/2" G
Working pressure 10 bars
Test pressure 13 bars
Max. operating temperature 110°C
3-phase painting process:
- hot pretreatment and phosphatization
- electrophoretic dip base coat
- epoxy powder finish coat

Standard connections and accessories
Plattella C6 Vertical is delivered with:
- top grille
- screw-on side panels for greater safety, model 10 excluded
- 4 x 1/2" bottom connections, internal thread, 50 mm pipe centre
- 2 x 1/2" upper connections, internal thread

The product is supplied with pre-assembled plastic lids that must be removed before installation and replaced with the supplied caps.

Installation kit including:
- GB brackets
- 3 x 1/2" blind plugs
- 1 x 1/2" vent plug

PLATTELLA C6 Vertical

Front view

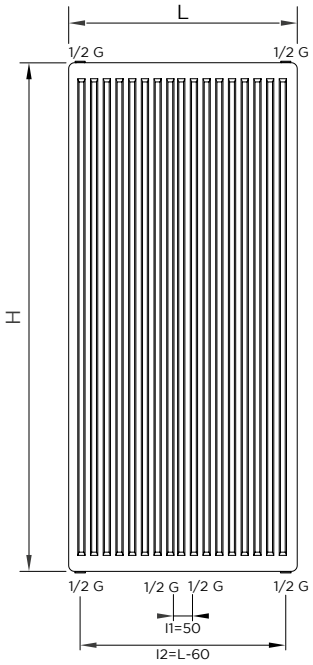

Top view

10 62

20 70

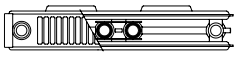

21 70

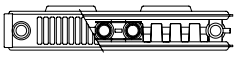

22 102

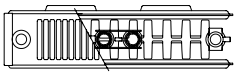

Dimensions are in millimeters (mm)

Configurations

In Out

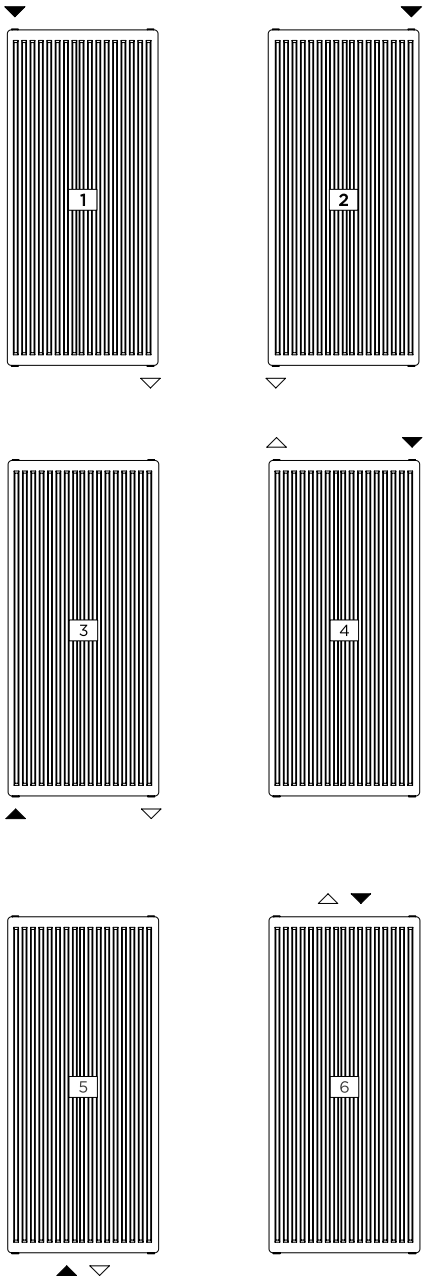

For connection method:
1-2-3-5 standard configurations
4-6 before ordering, see configuration Notes page 97

PLATTELLA C6 Vertical

H 1400			10			20			21			22		
Depth (mm)			62			70			70			102		
Esponent (n)			1,363			1,313			1,294			1,380		
Leng. (mm)	Pipe centre (mm)		Output Δt 50°C 75/65-20 W	Output Δt 42,5°C 70/55-20 W	Output Δt 30°C 55/45-20 W	Output Δt 50°C 75/65-20 W	Output Δt 42,5°C 70/55-20 W	Output Δt 30°C 55/45-20 W	Output Δt 50°C 75/65-20 W	Output Δt 42,5°C 70/55-20 W	Output Δt 30°C 55/45-20 W	Output Δt 50°C 75/65-20 W	Output Δt 42,5°C 70/55-20 W	Output Δt 30°C 55/45-20 W
300	240	outp	423	339	211	649	524	332	802	650	414	982	784	485
		cod.	0184103842			0184203842			00184213842			00184223842		
400	340	outp	564	452	281	865	699	442	1070	867	552	1309	1046	647
		cod.	0184104842			0184204842			0184214842			0184224842		
500	440	outp	705	565	351	1081	873	553	1337	1084	690	1636	1307	808
		cod.	0184105842			0184205842			0184215842			0184225842		
600	540	outp	846	678	421	1297	1048	663	1605	1300	828	1963	1569	970
		cod.	0184106842			0184206842			0184216842			0184226842		
700	640	outp	987	791	492	1513	1223	774	1872	1517	966	2290	1830	1132
		cod.	0184107842			0184207842			0184217842			0184227842		
900	840	outp	1268	1016	632	1946	1572	995	2407	1950	1243	2945	2353	1455
		cod.	0184109842			0184209842			0184219842			0184229842		

H 1600			10			20			21			22		
Depth (mm)			62			70			70			102		
Esponent (n)			1,349			1,310			1,322			1,371		
Leng. (mm)	Pipe centre (mm)		Output Δt 50°C 75/65-20 W	Output Δt 42,5°C 70/55-20 W	Output Δt 30°C 55/45-20 W	Output Δt 50°C 75/65-20 W	Output Δt 42,5°C 70/55-20 W	Output Δt 30°C 55/45-20 W	Output Δt 50°C 75/65-20 W	Output Δt 42,5°C 70/55-20 W	Output Δt 30°C 55/45-20 W	Output Δt 50°C 75/65-20 W	Output Δt 42,5°C 70/55-20 W	Output Δt 30°C 55/45-20 W
300	240	outp	473	380	237	730	590	374	882	712	449	1069	856	531
		cod.	0184103848			0184203848			0184213848			0184223848		
400	340	outp	630	506	316	974	787	498	1176	949	599	1426	1141	708
		cod.	0184104848			0184204848			0184214848			0184224848		
500	440	outp	788	633	396	1217	984	623	1470	1186	748	1782	1426	885
		cod.	0184105848			0184205848			0184215848			0184225848		
600	540	outp	946	760	475	1460	1180	748	1764	1423	898	2139	1712	1062
		cod.	0184106848			0184206848			0184216848			0184226848		
700	640	outp	1103	886	554	1704	1377	872	2058	1660	1048	2495	1997	1239
		cod.	0184107848			0184207848			0184217848			0184227848		
900	840	outp	1419	1139	712	2191	1770	1122	2647	2135	1347	3209	2567	1593
		cod.	0184109848			0184209848			0184219848			0184229848		

H 1800			10			20			21			22		
Depth (mm)			62			70			70			102		
Esponent (n)			1,336			1,308			1,350			1,362		
Leng. (mm)	Pipe centre (mm)		Output Δt 50°C 75/65-20 W	Output Δt 42,5°C 70/55-20 W	Output Δt 30°C 55/45-20 W	Output Δt 50°C 75/65-20 W	Output Δt 42,5°C 70/55-20 W	Output Δt 30°C 55/45-20 W	Output Δt 50°C 75/65-20 W	Output Δt 42,5°C 70/55-20 W	Output Δt 30°C 55/45-20 W	Output Δt 50°C 75/65-20 W	Output Δt 42,5°C 70/55-20 W	Output Δt 30°C 55/45-20 W
300	240	outp	528	425	267	810	655	415	961	771	482	1164	933	558
		cod.	0184103854			0184203854			0184213854			0184223854		
400	340	outp	703	566	356	1080	873	554	1281	1028	643	1552	1244	774
		cod.	0184104854			0184204854			0184214854			0184224854		
500	440	outp	879	708	444	1350	1091	692	1601	1286	803	1940	1554	967
		cod.	0184105854			0184205854			0184215854			0184225854		
600	540	outp	1055	849	533	1620	1310	830	1921	1543	964	2328	1865	1161
		cod.	0184106854			0184206854			0184216854			0184226854		
700	640	outp	1231	991	622	1890	1528	969	2241	1800	1125	2716	2176	1354
		cod.	0184107854			0184207854			0184217854			0184227854		
900	840	outp	1583	1274	800	2430	1965	1246	2882	2314	1446	3491	2798	1741
		cod.	0184109854			0184209854			0184219854			0184229854		

PLATTELLA C6 Vertical

H 2000			10			20			21			22		
Depth (mm)			62			70			70			102		
Esponent (n)			1,351			1,313			1,345			1,385		
Leng. (mm)	Pipe centre (mm)		Output Δt 50°C 75/65-20 W	Output Δt 42,5°C 70/55-20 W	Output Δt 30°C 55/45-20 W	Output Δt 50°C 75/65-20 W	Output Δt 42,5°C 70/55-20 W	Output Δt 30°C 55/45-20 W	Output Δt 50°C 75/65-20 W	Output Δt 42,5°C 70/55-20 W	Output Δt 30°C 55/45-20 W	Output Δt 50°C 75/65-20 W	Output Δt 42,5°C 70/55-20 W	Output Δt 30°C 55/45-20 W
300	240	outp	587	471	294	888	717	454	1038	834	522	1265	1010	624
		cod.	0184103860			0184203860			0184213860			0184223860		
400	340	outp	782	628	392	1184	956	605	1384	1112	696	1687	1347	832
		cod.	0184104860			0184204860			0184214860			0184224860		
500	440	outp	978	785	490	1480	1196	757	1730	1390	870	2109	1684	1040
		cod.	0184105860			0184205860			0184215860			0184225860		
600	540	outp	1173	942	588	1776	1435	908	2076	1668	1045	2531	2021	1248
		cod.	0184106860			0184206860			0184216860			0184226860		
700	640	outp	1369	1099	686	2072	1674	1059	2422	1947	1219	2953	2358	1456
		cod.	0184107860			0184207860			0184217860			0184227860		
900	840	outp	1760	1413	882	2664	2152	1362	3114	2503	1567	3796	3031	1871
		cod.	0184109860			0184209860			0184219860			0184229860		

H 2200			10			20			21			22		
Depth (mm)			62			70			70			102		
Esponent (n)			1,366			1,318			1,339			1,407		
Leng. (mm)	Pipe centre (mm)		Output Δt 50°C 75/65-20 W	Output Δt 42,5°C 70/55-20 W	Output Δt 30°C 55/45-20 W	Output Δt 50°C 75/65-20 W	Output Δt 42,5°C 70/55-20 W	Output Δt 30°C 55/45-20 W	Output Δt 50°C 75/65-20 W	Output Δt 42,5°C 70/55-20 W	Output Δt 30°C 55/45-20 W	Output Δt 50°C 75/65-20 W	Output Δt 42,5°C 70/55-20 W	Output Δt 30°C 55/45-20 W
300	240	outp	651	522	324	965	779	492	1115	897	562	1375	1094	670
		cod.	0184103866			0184203866			0184213866			0184223866		
400	340	outp	868	696	432	1286	1038	656	1486	1195	750	1833	1459	893
		cod.	0184104866			0184204866			0184214866			0184224866		
500	440	outp	1086	869	540	1608	1298	820	1858	1494	937	2292	1823	1117
		cod.	0184105866			0184205866			0184215866			0184225866		
600	540	outp	1303	1043	648	1929	1557	984	2229	1793	1125	2750	2188	1340
		cod.	0184106866			0184206866			0184216866			0184226866		
700	640	outp	1520	1217	756	2251	1817	1148	2601	2092	1312	3208	2553	1563
		cod.	0184107866			0184207866			0184217866			0184227866		
900	840	outp	1954	1565	972	2894	2336	1476	3344	2690	1687	4125	3282	2010
		cod.	0184109866			0184209866			0184219866			0184229866		

H 2400			10			20			21			22		
Depth (mm)			62			70			70			102		
Esponent (n)			1,382			1,323			1,335			1,429		
Leng. (mm)	Pipe centre (mm)		Output Δt 50°C 75/65-20 W	Output Δt 42,5°C 70/55-20 W	Output Δt 30°C 55/45-20 W	Output Δt 50°C 75/65-20 W	Output Δt 42,5°C 70/55-20 W	Output Δt 30°C 55/45-20 W	Output Δt 50°C 75/65-20 W	Output Δt 42,5°C 70/55-20 W	Output Δt 30°C 55/45-20 W	Output Δt 50°C 75/65-20 W	Output Δt 42,5°C 70/55-20 W	Output Δt 30°C 55/45-20 W
300	240	outp	722	577	356	1040	838	529	1191	959	602	1493	1184	720
		cod.	0184103872			0184203872			0184213872			0184223872		
400	340	outp	962	769	475	1386	1118	705	1588	1278	803	1991	1578	959
		cod.	0184104872			0184204872			0184214872			0184224872		
500	440	outp	1203	961	594	1733	1397	881	1985	1598	1003	2489	1973	1199
		cod.	0184105872			0184205872			0184215872			0184225872		
600	540	outp	1444	1153	713	2079	1677	1058	2382	1917	1204	2986	2367	1439
		cod.	0184106872			0184206872			0184216872			0184226872		
700	640	outp	1684	1345	831	2426	1956	1234	2779	2237	1405	3484	2762	1679
		cod.	0184107872			0184207872			0184217872			0184227872		
900	840	outp	2165	1730	1069	3119	2515	1587	3572	2876	1806	4479	3551	2159
		cod.	0184109872			0184209872			0184219872			0184229872		

Note

Replacement side panels and grilles - PLATTELLA

REPLACEMENT SIDE PANELS FOR PLATTELLA

Type	Height	11	21	22	33	22 Special	33 Special
C4-V6	300	7380000000	7380012400	7380003000	7380018300	7380001800	7380018800
C4-V6	400	7380000100	7380012500	7380003100	7380004300	7380018400	7380018900
C4-V6	500	7380000200	7380012600	7380003200	7380004400	7380018500	7380019000
C4-V6	600	7380000300	7380012700	7380003300	7380004500	7380018600	7380019100
C4-V6	700	7380000400	7380012800	7380003400	7380004600	7380018700	7380019200
C4-V6	900	7380000500	7380012900	7380003500	7380004700	7380019300	7380019400

REPLACEMENT GRILLES FOR PLATTELLA

Type	Height	11	21	22	33
all	400	7380006000	7380013000	7380009200	7380010800
	500	7380006100	7380013100	7380009300	7380010900
	600	7380006200	7380013200	7380009400	7380011000
	700	7380006300	7380013300	7380009500	7380011100
	800	7380006400	7380013400	7380009600	7380011200
	900	7380006500	7380013500	7380009700	7380011300
	1000	7380006600	7380013600	7380009800	7380011400
	1100	7380006700	7380013700	7380009900	7380011500
	1200	7380006800	7380013800	7380010000	7380011600
	1400	7380006900	7380013900	7380010100	7380011700
	1600	7380007000	7380014000	7380010200	7380011800
	1800	7380007100	7380014100	7380010300	7380011900
	2000	7380007200	7380014200	7380010400	7380012000
	2300	7380007300	7380014300	7380010500	7380012100
	2600	7380007400	7380014400	7380010600	7380012200
	3000	7380007500	7380014500	7380010700	7380012300

REPLACEMENT SIDE PANELS FOR PLATTELLA C6 VERTICAL

Short description	Code	
Repl. side panels 20 1400	7384002700	ricambio 20/21 vert.
Repl. side panels 20 1600	7384002800	ricambio 20/21 vert.
Repl. side panels 20 1800	7384002900	ricambio 20/21 vert.
Repl. side panels 20 2000	7384003000	ricambio 20/21 vert.
Repl. side panels 20 2200	7384003100	ricambio 20/21 vert.
Repl. side panels 20 2400	7384003300	ricambio 20/21 vert.
Repl. side panels 22 1400	7384004600	ricambio 22 vert.
Repl. side panels 22 1600	7384004700	ricambio 22 vert.
Repl. side panels 22 1800	7384004800	ricambio 22 vert.
Repl. side panels 22 2000	7384004900	ricambio 22 vert.
Repl. side panels 22 2200	7384005000	ricambio 22 vert.
Repl. side panels 22 2400	7384005100	ricambio 22 vert.

REPLACEMENT GRILLE FOR PLATTELLA C6 VERTICAL

Short description	Code	
Repl. vertical L 300	7384002000	ricambio griglia 20/21
Repl. vertical L 400	7384002100	ricambio griglia 20/21
Repl. vertical L 500	7384002200	ricambio griglia 20/21
Repl. vertical L 600	7384002300	ricambio griglia 20/21
Repl. vertical L 700	7384002400	ricambio griglia 20/21
Repl. vertical L 900	7384002500	ricambio griglia 20/21
Repl. vertical L 300	7384005200	ricambio griglia 22
Repl. vertical L 400	7384005300	ricambio griglia 22
Repl. vertical L 500	7384005400	ricambio griglia 22
Repl. vertical L 600	7384005500	ricambio griglia 22
Repl. vertical L 700	7384005600	ricambio griglia 22
Repl. vertical L 900	7384005700	ricambio griglia 22

REPLACEMENT GRILLE CLIP FOR PLATTELLA

Short description	Code
Plastic grille clip 11	5380000301
Plastic grille clip 21	5380000401
Plastic grille clip 22	5380000501
Plastic grille clip 33	5380000301 5380000501
Plastic screw 1 for grille clip	535295

REPLACEMENT GRILLE CLIP FOR PLATTELLA C6 VERTICAL

Short description	Code
Plastic grille clip 20/33	5380000301
Plastic grille clip 21	5380000401
Plastic grille clip 22	5380000501
Plastic screw 1 for grille clip	535295

Weights, water content and surface area - PLATTELLA

PLATTELLA C4 COMPACT

		Height					
Model	Characteristic	300	400	500	600	700	900
11	Water content (l/m)	2,10	2,57	3,03	3,50	4,63	5,10
	Weight (kg/m)	10,06	12,78	16,13	19,24	22,12	29,22
	Surface area (m^2/m)	1,21	2,21	3,20	4,19	5,19	7,16
21	Water content (l/m)	4,20	5,17	6,13	7,10	8,10	10,10
	Weight (kg/m)	15,40	20,37	26,14	30,19	35,34	45,91
	Surface area (m^2/m)	1,86	3,07	4,28	5,48	6,69	9,10
22	Water content (l/m)	4,20	5,17	6,13	7,10	8,10	10,10
	Weight (kg/m)	16,98	22,48	28,61	34,01	40,54	51,40
	Surface area (m^2/m)	2,43	4,41	6,39	8,37	10,35	14,37
33	Water content (l/m)	6,10	7,87	9,63	11,40	12,73	15,40
	Weight (kg/m)	25,52	33,88	42,51	50,19	58,51	76,84
	Surface area (m^2/m)	3,64	6,62	9,59	12,56	15,54	21,48

PLATTELLA V6 L

		Height					
Model	Characteristic	300	400	500	600	700	900
11	Water content (l/m)	2,10	2,57	3,03	3,50	4,63	5,10
	Weight (kg/m)	10,24	12,99	16,38	19,50	22,41	29,57
	Surface area (m^2/m)	1,21	2,21	3,20	4,19	5,19	7,16
21	Water content (l/m)	4,20	5,17	6,13	7,10	8,10	10,10
	Weight (kg/m)	15,47	20,40	26,12	30,11	35,17	45,65
	Surface area (m^2/m)	1,86	3,07	4,28	5,48	6,69	9,10
22	Water content (l/m)	4,20	5,17	6,13	7,10	8,10	10,10
	Weight (kg/m)	17,06	22,52	28,56	33,89	40,38	51,09
	Surface area (m^2/m)	2,43	4,41	6,39	8,37	10,35	14,37
33	Water content (l/m)	6,10	7,87	9,63	11,40	12,73	15,40
	Weight (kg/m)	25,59	33,93	42,47	50,08	58,35	76,53
	Surface area (m^2/m)	3,64	6,62	9,59	12,56	15,54	21,48

PLATTELLA V6 C

		Height					
Model	Characteristic	300	400	500	600	700	900
11	Water content (l/m)	2,10	2,57	3,03	3,50	4,63	5,10
	Weight (kg/m)	10,35	13,80	17,25	20,70	24,15	31,05
	Surface area (m^2/m)	1,21	2,21	3,20	4,19	5,19	7,16
21	Water content (l/m)	4,20	5,17	6,13	7,10	8,10	10,10
	Weight (kg/m)	16,11	21,48	26,85	32,22	37,59	48,33
	Surface area (m^2/m)	1,86	3,07	4,28	5,48	6,69	9,10
22	Water content (l/m)	4,20	5,17	6,13	7,10	8,10	10,10
	Weight (kg/m)	19,35	25,80	32,25	38,70	45,15	58,05
	Surface area (m^2/m)	2,43	4,41	6,39	8,37	10,35	14,37
33	Water content (l/m)	6,10	7,87	9,63	11,40	12,73	15,40
	Weight (kg/m)	28,80	38,40	48,00	57,60	67,20	86,40
	Surface area (m^2/m)	3,64	6,62	9,59	12,56	15,54	21,48

PLATTELLA C4 HYGIENE

		Height					
Model	Characteristic	300	400	500	600	700	900
10	Water content (l/m)	2,10	2,57	3,03	3,50	4,63	5,10
	Weight (kg/m)	6,04	8,03	9,93	11,53	14,06	16,94
	Surface area (m^2/m)	0,67	0,90	1,12	1,34	1,59	2,02
20	Water content (l/m)	4,20	5,17	6,13	7,10	8,10	10,10
	Weight (kg/m)	12,16	15,95	19,45	23,32	27,76	34,91
	Surface area (m^2/m)	1,32	1,76	2,20	2,63	3,09	3,96
30	Water content (l/m)	6,10	7,87	9,63	11,40	12,73	15,40
	Weight (kg/m)	18,49	24,18	29,43	35,23	41,89	52,62
	Surface area (m^2/m)	1,98	2,65	3,31	3,95	4,65	5,87

PLATTELLA V6 HYGIENE

		Height					
Model	Characteristic	300	400	500	600	700	900
10	Water content (l/m)	2,10	2,57	3,03	3,50	4,63	5,10
	Weight (kg/m)	6,38	8,46	10,52	12,23	14,86	18,00
	Surface area (m^2/m)	0,67	0,90	1,12	1,34	1,59	2,02
20	Water content (l/m)	4,20	5,17	6,13	7,10	8,10	10,10
	Weight (kg/m)	12,23	15,98	19,43	23,24	27,59	34,65
	Surface area (m^2/m)	1,32	1,76	2,20	2,63	3,09	3,96
30	Water content (l/m)	6,10	7,87	9,63	11,40	12,73	15,40
	Weight (kg/m)	18,56	24,23	29,39	35,12	41,73	52,31
	Surface area (m^2/m)	1,98	2,65	3,31	3,95	4,65	5,87

Weights, water content and surface area - PLATTELLA C6 Vertical

			Length					
Model	Height	Characteristic	300	400	500	600	700	900
10	1400	Water content (l/m)	2,49	3,32	4,16	4,99	5,82	7,48
		Weight (kg/m)	8,30	11,06	13,83	16,60	19,36	24,89
	1600	Water content (l/m)	2,73	3,64	4,55	5,45	6,36	8,18
		Weight (kg/m)	9,42	12,56	15,71	18,85	21,99	28,27
	1800	Water content (l/m)	2,95	3,94	4,92	5,90	6,89	8,86
		Weight (kg/m)	10,55	14,06	17,58	21,10	24,61	31,64
	2000	Water content (l/m)	3,33	4,44	5,55	6,66	7,77	9,99
		Weight (kg/m)	11,66	15,55	19,44	23,33	27,22	34,99
	2200	Water content (l/m)	3,80	5,07	6,33	7,60	8,87	11,40
		Weight (kg/m)	13,00	17,33	21,67	26,00	30,33	39,00
	2400	Water content (l/m)	4,15	5,53	6,92	8,30	9,68	12,45
		Weight (kg/m)	14,05	18,73	23,42	28,10	32,78	42,15

			Length					
Model	Height	Characteristic	300	400	500	600	700	900
20	1400	Water content (l/m)	5,00	6,66	8,33	9,99	11,66	14,99
		Weight (kg/m)	16,95	22,60	28,25	33,89	39,54	50,84
	1600	Water content (l/m)	5,50	7,33	9,17	11,00	12,83	16,50
		Weight (kg/m)	19,38	25,84	32,30	38,75	45,21	58,13
	1800	Water content (l/m)	6,00	8,00	10,01	12,01	14,01	18,01
		Weight (kg/m)	21,80	29,06	36,33	43,60	50,86	65,39
	2000	Water content (l/m)	6,74	8,99	11,24	13,48	15,73	20,22
		Weight (kg/m)	24,22	32,29	40,37	48,44	56,51	72,66
	2200	Water content (l/m)	7,70	10,27	12,83	15,40	17,97	23,10
		Weight (kg/m)	26,20	34,93	43,67	52,40	61,13	78,60
	2400	Water content (l/m)	8,25	11,00	13,75	16,50	19,25	24,75
		Weight (kg/m)	28,80	38,40	48,00	57,60	67,20	86,40

			Length					
Model	Height	Characteristic	300	400	500	600	700	900
21	1400	Water content (l/m)	5,00	6,66	8,33	9,99	11,66	14,99
		Weight (kg/m)	20,80	27,73	34,67	41,60	48,53	62,40
	1600	Water content (l/m)	5,50	7,33	9,17	11,00	12,83	16,50
		Weight (kg/m)	23,72	31,63	39,54	47,45	55,36	71,17
	1800	Water content (l/m)	6,00	8,00	10,01	12,01	14,01	18,01
		Weight (kg/m)	26,65	35,53	44,42	53,30	62,18	79,95
	2000	Water content (l/m)	6,74	8,99	11,24	13,48	15,73	20,22
		Weight (kg/m)	29,65	39,53	49,41	59,29	69,17	88,94
	2200	Water content (l/m)	7,70	10,27	12,83	15,40	17,97	23,10
		Weight (kg/m)	32,70	43,60	54,50	65,40	76,30	98,10
	2400	Water content (l/m)	8,25	11,00	13,75	16,50	19,25	24,75
		Weight (kg/m)	35,60	47,47	59,33	71,20	83,07	106,80

			Length					
Model	Height	Characteristic	300	400	500	600	700	900
22	1400	Water content (l/m)	5,00	6,66	8,33	9,99	11,66	14,99
		Weight (kg/m)	24,65	32,86	41,09	49,31	57,52	73,96
	1600	Water content (l/m)	5,50	7,33	9,17	11,00	12,83	16,50
		Weight (kg/m)	27,57	36,76	45,96	55,16	64,35	82,73
	1800	Water content (l/m)	6,00	8,00	10,01	12,01	14,01	18,01
		Weight (kg/m)	30,50	40,66	50,84	61,01	71,17	91,51
	2000	Water content (l/m)	6,74	8,99	11,24	13,48	15,73	20,22
		Weight (kg/m)	33,50	44,66	55,83	67,00	78,16	100,50
	2200	Water content (l/m)	7,70	10,27	12,83	15,40	17,97	23,10
		Weight (kg/m)	36,55	48,73	60,92	73,11	85,29	109,66
	2400	Water content (l/m)	8,25	11,00	13,75	16,50	19,25	24,75
		Weight (kg/m)	39,45	52,60	65,75	78,91	92,06	118,36

Connection method

Plattella C4 Compact - Plattella C4 Hygiene

Two-pipe

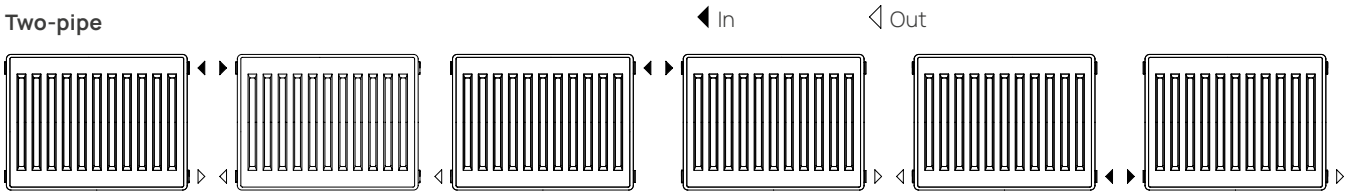

The connection methods described here are symmetric.
Plattella C4 can be connected with a two-pipe connection as follows:

- high/low same side (all EN442 heat outputs are calculated and verified with this type of connection),
- high/low opposite side (the best way to connect panels longer than 1000 mm),
- low/low opposite side (this connection method reduces heat output by about 10%).

Two-pipe connection requires a thermostatic valve (possibly with thermostatic head) and lockshield.

One-pipe (feed from a single connection point)

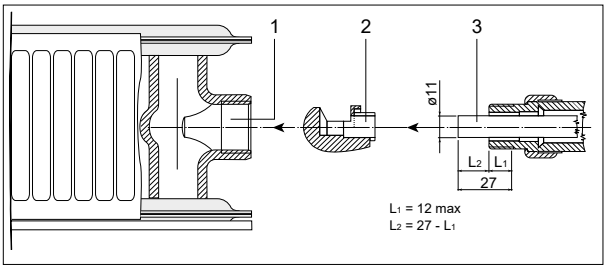

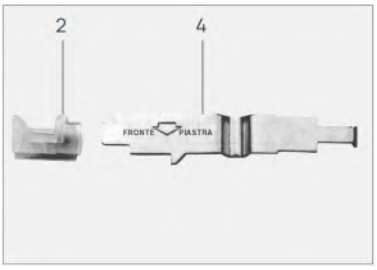

Plattella C4 can be connected with a one-pipe connection using the special flow deflector (2) inserted in the connection point (1) using the key (4).
To connect to a one-pipe installation, a one-pipe valve with probe (not available from RADIATORS) is required. The probe
must have a maximum length of 11 mm and the length of the external probe and the thread inside the valve must not exceed 27mm (3).

One-pipe connection kit

Code	Description
5380003300	Flow deector for one-pipe valve
611561	Flow deector key

Pressure drop and valve regulation

Two-pipe system

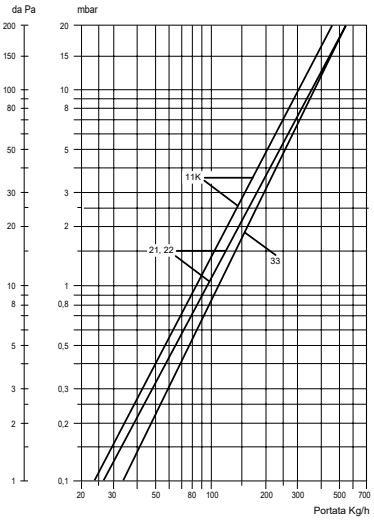

Diagram 1: Pressure drops for two-pipe system.

Pressure drops Δp are expressed in daPa and mbar

1 mm H_2O col. = 0,0981 mbar

Pressure drop diagram for PLATTELLA NT panels. The values are obtained with 1/2" G connection on one side only.
basic models 11 K
basic models 21 and 22
basic models 33

One-pipe system

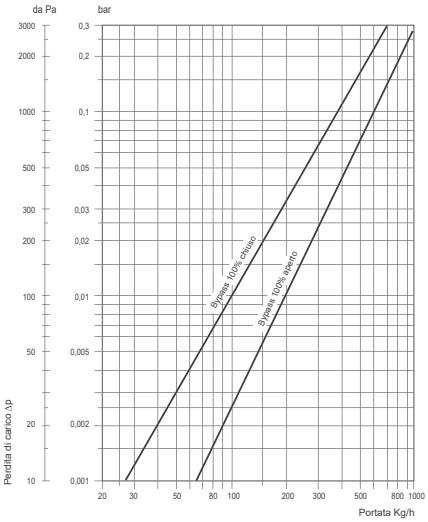

Diagram 2: Pressure drops for one-pipe system with flow deflector.

Pressure drops refer to panels with special valve for one-pipe system and including special flow deflectors. They are expressed in daPa and bar.

The pressure drop diagram shows the extreme pressure drop values for PLATTELLA NT panels for basic models 21, 22 and 33.
Bear in mind the requirements for special one-pipe valves.

Connection method

Plattella V6 L - Plattella V6 C - Plattella V6 Hygiene

Plattella V6 L e V6 Hygiene

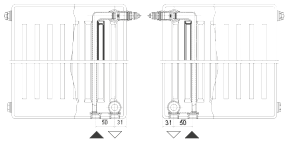

Regulation is based on the 70/55-20 heat output of the radiator and the pressure drop of the insert mounted (0.1 bar). To reset if necessary, the value to be set for the thermostatic insert (two-pipe connection) can be obtained from the Q Flow Rate diagrams (expressed in kg/h). Pressure drop p (expressed in bar or kPa). Starting from the t set in the system and the power of the radiator (EN442 standard output), the intersection with the pressure drop value on the X axis determines the nearest kv at which to set the insert (for example: position 3 or 4).

Plattella V6 C

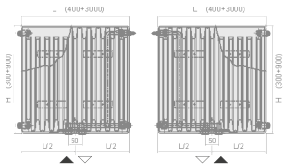

The value to be set for the thermostatic insert (two-pipe connection) can be obtained from the Q Flow Rate diagrams (expressed in kg/h) - Pressure drop p (expressed in bars or kPa).
Starting from the t set in the system and the power of the radiator (EN442 standard output), the intersection with the pressure drop value on the X axis determines the nearest kv at which to set the insert (for example: position 3 or 4).

Two-pipe connection

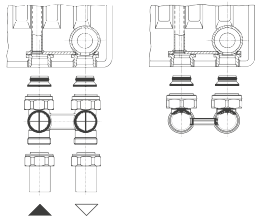

V6 model can be connected to a two-pipe system using a straight or "L" distributor.
Our range of distributors are provided with Eurocone insert for connection to the 3/4" externally threaded connections on the Plattella models. The nozzle on the distributors provided for draining the radiator can be connected to the draining device.

Two-pipe Distributors

Codice	Description
5580013600	Straight distributor - TWO-PIPE
5580013700	"L" distributor - TWO-PIPE
5580103500	Straight distributor - TWO-PIPE - designed for radiator drain
5580193600	"L" distributor - TWO-PIPE - designed for radiator drain

One-pipe connection method (single-point connection method)

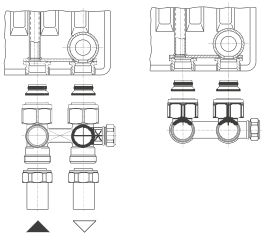

Plattella V6 model can be connected to a one-pipe system using a straight or "L" distributor. Our range of distributors are provided with Eurocone insert for connection to the 3/4" threaded connections on the Plattella V6 and V8 models. On the distributor side the by-pass must be regulated to define the water flow entering the radiator and the flow bypassing it to continue in the circuit.

One-pipe distributors

Code	Description
5580008200	Straight distributor - ONE-PIPE
5580008300	"L" distributor - ONE-PIPE

Valve - part numbers

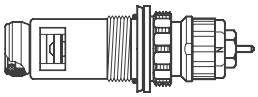

RADIATORS code	Presetting	Dimension
5580139900	NN	M23 x 1,5
5580140000	-	M30 x 1,5

Connection method

Plattella V6 L - Plattella V6 C - Plattella V6 Hygiene

Pressure drop and valve regulation (cod. 5580139900) - two-pipe system

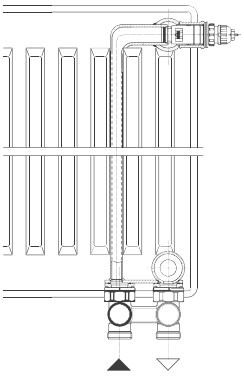

Fig. 1

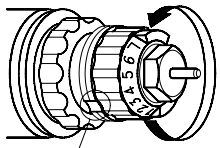

Fig. 2

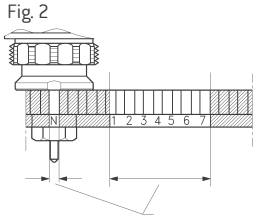

Fig. 3

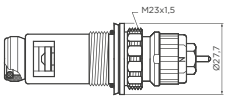

"L" or straight distributors can be used in two-pipe installations.

These distributors incorporate two gate valves to intercept both the input and output flows. To ensure the thermostatic head maintains room temperature precisely, the built-in thermostatic valve must be adjusted to achieve a pressure drop of 0.1 bar in the radiator (use diagram 2).

REGULATION

The value obtained from the diagram can be easily set on the thermostatic valve without tools:

- Remove the protective cap,
- Turn the adjustment ring until the pointer corresponds to the required value on the graduated scale (fig. 1).

The setting is continuous from 1 to 7 (fig. 2).
In position N, the valve is fully open.

Example:

- Model 21/600-1000
- Power = 1325 W
- With Δt = 15°C and Δp = 0,1 bar diagram 1 gives the valve setting value 3 (water flow)

Pressure drop and valve regulation (rif. cod. 5580139900) - one-pipe system

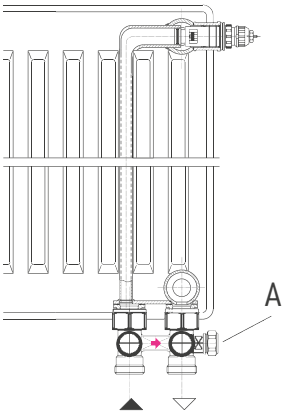

Diagram 1

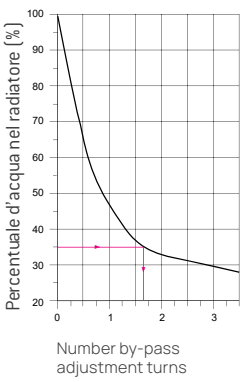

For one-pipe installations, a straight or "L" distributor with adjustable by-pass is required. The thermostatic valve must be set to position N (radiators are normally marked with the valve in this position - the panels are factory preset). When the percentage flow rate in the radiator is known (with respect to the total flow in the installation), the no. of turns to be set on the by-pass can be obtained from diagram 1. The by-pass under the cover A of the distributor can then be adjusted using an Allen key by the number of turns indicated in the table. To know the pressure drop in the radiator, use diagram 2. Once the total flow in the installation and the percentage flow in the radiator are known, the pressure drop in metres water column or bars can be obtained.

Example:

Given: Total heat flow in loop (5814 Watt)
Δt = 10°C (75/65°C)
35% flow rate in exchanger

Obtain: by-pass adjustment value and pressure drop in radiator

Solution: Flow rate in loop $m = \frac{Q}{c \times \Delta t} = \frac{5814 \times 0{,}86}{1 \times 10} = 500$ kg/h

From table 1: no. of by-pass turns = 1 and 3/4
From diagram 2 Δp = 0,1 bar

The flow rate in the radiator can be regulated subsequently, including during operation. The distributor can also be used as a blind bridge if the radiator is mounted subsequently or dismounted, without having to empty the installation.

Diagram 2

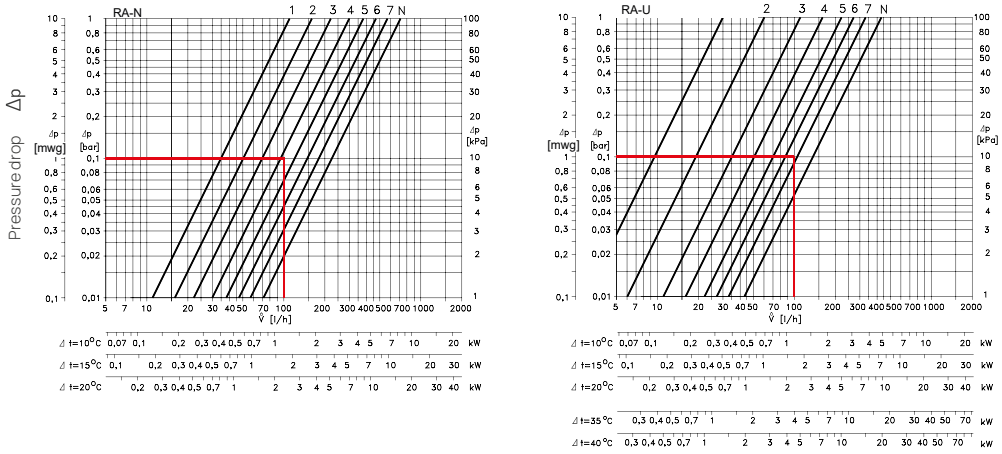

Connection method

Plattella C6 Vertical

The Vertical panels can be connected to a two-pipe system as follows:
- top/bottom opposite side (1, 2),
- bottom/bottom opposite side (3),
- top/top opposite side (4)connections and in the configuration with bottom (5) or top (6) central connection.

The top/top opposite side connection (4) and top central connection (6) are applicable only and exclusively with the panel in configuration AA (top connection) as in this case there is a deflector installed in the radiator and it is without grille.
Configurations 3, 4, 5 and 6 are symmetrical with respect to the indications in the drawings below (the output and input indicated by the arrows can be reversed). Two-pipe connection with connections at the sides of the panel requires a thermostatic valve (possibly with thermostatic head) and lockshield.
When connecting with connections at the sides of the panel, the central connection must be sealed with two blind plugs.

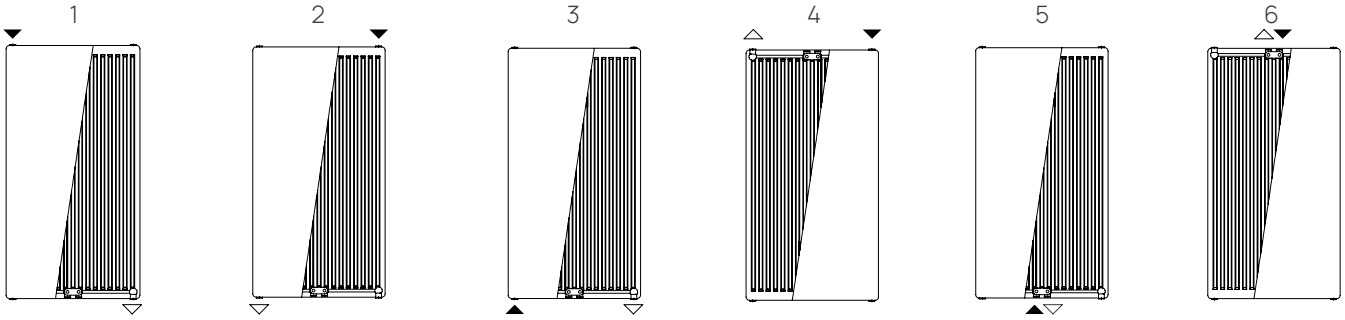

Configurations

When ordering, please indicate the desired configuration:
- AB bottom connection
- AA top connection

In the case of the top connection (AA), the 8 in the third to last position of the code must be replaced with a 9. Example: 0184214854 is a Vertical 21 1800x400 panel with bottom connections (AB); 0184214954 is a Vertical 21 1800x400 panel with top connections (AA).

CONFIGURATION AB
Bottom connection, with top grille

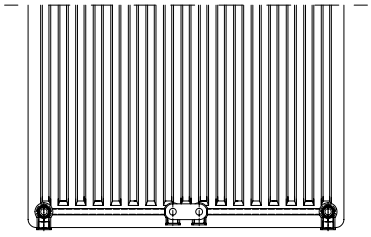

CONFIGURATION AA
Top connection, without top grille

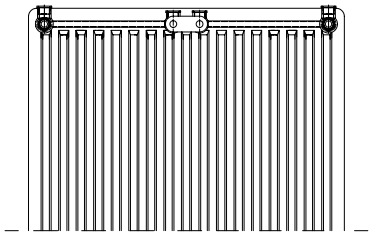

Fixing brackets

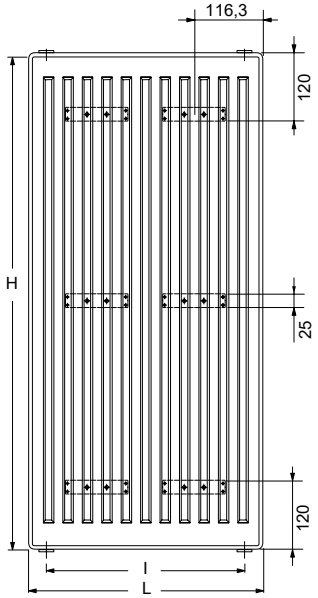

Vertical 300 mm wide panels are provided with a welded support at the back, but they nevertheless require fixing with 2 brackets, as do all larger widths.

Total dimensions

Plattella C4 Compact

		Dimensions per model (mm)			
		11	21	22	33
Panel depth excluding back supports	A	63	66	100	157
Total depth from back of support to front panel**	B	75	75	109	166
Distance from back support to connection	C	40	42	59	59
Distance from wall to centre of connection (mounting the panel radiator on the GB brackets provided as standard)*	D	54/64	57/65	74/81	74/81
Total distance from wall to front panel (mounting the panel radiator on the GP brackets provided as standard)*	E	91/99	90/98	125/133	182/190

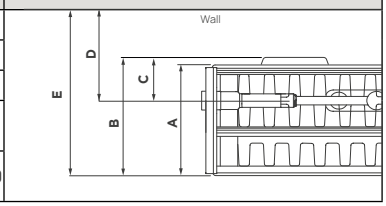

* The total distance changes depending on the depth of the side of the shelf chosen.
** When calculating the total size occupied by the panel radiator (from the wall to the front panel) with the chosen wall brackets: the useful length of the chosen bracket must be added to this measurement.

Plattella C4 Special

	Height (mm)	
	600	700
Pipe centre side 1 (Special pipe centre)	500	600
Pipe centre side 2	540	640

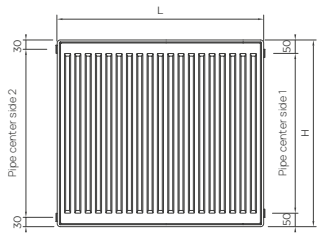

Plattella V6 L

		Dimensions per model (mm)			
		11	21	22	33
Panel depth excluding back supports	A	63	66	100	157
Total depth from back of support to front panel	B	75	-	-	-
Distance from back support to connection	C	40	33	50	50
Distance from wall to centre of connection (mod.11 GB brackets)*	D	54/64	63	80	80
Total distance from wall to front panel (mod.11 GB brackets)*	E	90/98	96	130	187

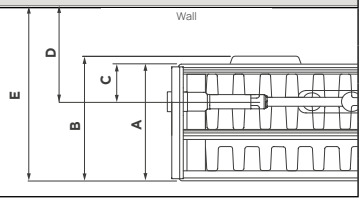

The dimensions indicated for model 11 refer to the fixing kit GB.
The dimensions indicated for the models 21, 22 and 33 refer to the fixing kit F7.
* The footprint changes depending on the depth of the side of the shelf chosen.

Plattella V6 C

		Dimensions per model (mm)			
		11	21	22	33
Panel depth excluding back supports	A	63	66	100	157
Total depth from back of support to front panel	B	75	-	-	-
Distance from back support to connection	C	40	33	50	50
Distance from wall to centre of connection (mod.11 GB brackets) *	D	54/64	63	80	80
Total distance from wall to front panel (mod.11 GB brackets)*	E	90/98	96	130	187

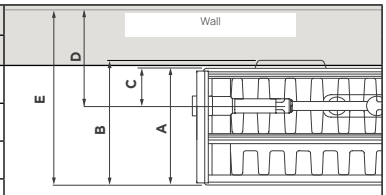

The dimensions indicated for model 11 refer to the fixing kit GB.
The dimensions indicated for the models 21, 22 and 33 refer to the fixing kit F7.
* The footprint changes depending on the depth of the side of the shelf chosen.

Total dimensions

Plattella C4 Hygiene

		Dimensions per model (mm)		
		10	20	30
Panel depth excluding back supports	A	63	66	157
Total depth from back of support to front panel**	B	63	75	166
Distance from back support to connection	C	-	42	59
Distance from wall to centre of connection (mounting the panel radiator on the GB brackets provided excluding mod.10)*	D	34	57/65	74/81
Total distance from wall to front panel (mounting the panel radiator on the GB brackets provided excluding mod.10)*	E	69	90/98	175/183

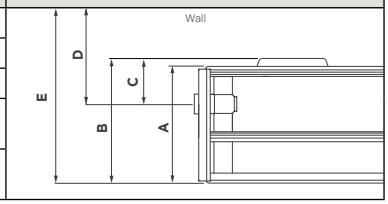

* The overall dimensions change depending on the depth of the side of the shelf chosen, model 10 on D30.
** For the calculation of the overall dimensions of the plate (wall to front panel) with shelves/wall brackets of your choice: add to this size the useful size of the shelf chosen.

Plattella V6 Hygiene

		Dimensions per model (mm)		
		10	20	30
Panel depth excluding back supports	A	63	66	157
Total depth from back of support to front panel**	B	-	75	166
Distance from back support to connection	C	-	42	59
Distance from wall to centre of connection (mounting the panel radiator on the GB brackets provided as standard)*	D	34	59/67	74/81
Total distance from wall to front panel (mounting the panel radiator on the GB brackets provided as standard)*	E	69	94/102	175/183

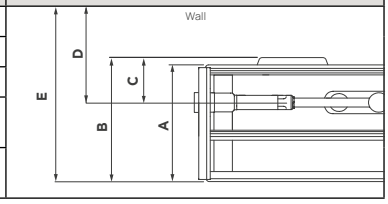

The dimensions indicated for model 20 and 30 refer to the fixing kit F7.
The dimensions indicated for the 10 models refer to the fixing kit GB.
* The overall dimensions change depending on the depth of the side of the shelf chosen, model 10 on D30
** For the calculation of the overall dimensions of the plate (wall to front panel) with shelves/wall brackets of your choice: add to this size the useful size of the shelf chosen.

Plattella C6 Vertical

		Dimensions per model (mm)			
		10	20	21	22
Panel depth excluding back supports	A	62	70	70	102
Total depth from back of support to front panel**	B	62	77	77	111
Distance from back support to connection	C	-	43	43	60
Distance from wall to centre of connection (mounting the panel radiator on the GB brackets provided as standard)*	D	35	58/66	58/66	74/82
Total distance from wall to front panel (mounting the panel radiator on the GB brackets provided as standard)*	E	70	93/101	93/101	125/133

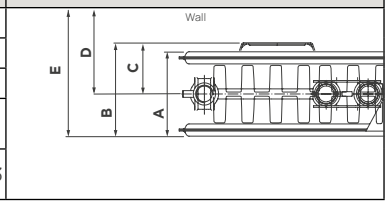

* The total distance changes depending on the depth of the side of the shelf chosen.
** When calculating the total size occupied by the panel radiator (from the wall to the front panel) with the chosen wall brackets: the useful length of the chosen bracket must be added to this measurement.

Palletizing

Plattella C4 Compact

	11						21						22						33					
H.	300	400	500	600	700	900	300	400	500	600	700	900	300	400	500	600	700	900	300	400	500	600	700	900
L.																								
400	28	28	28	28	28	28	28	28	28	28	28	14	20	20	20	20	20	10	14	14	14	14	14	14
500	28	28	28	28	28	28	28	28	28	28	28	14	20	20	20	20	20	10	14	14	14	14	14	14
600	14	14	14	14	14	14	14	14	14	14	14	14	10	10	10	10	10	10	7	7	7	7	7	7
700	14	14	14	14	14	14	14	14	14	14	14	14	10	10	10	10	10	10	7	7	7	7	7	7
800	14	14	14	14	14	14	14	14	14	14	14	14	10	10	10	10	10	10	7	7	7	7	7	7
900	14	14	14	14	14	14	14	14	14	14	14	14	10	10	10	10	10	10	7	7	7	7	7	7
1000	14	14	14	14	14	14	14	14	14	14	14	14	10	10	10	10	10	10	7	7	7	7	7	7
1100	14	14	14	14	14	14	14	14	14	14	14	14	10	10	10	10	10	10	7	7	7	7	7	7
1200	14	14	14	14	14	14	14	14	14	14	14	14	10	10	10	10	10	10	7	7	7	7	7	7
1400	14	14	14	14	14	14	14	14	14	14	14	14	10	10	10	10	10	10	7	7	7	7	7	7
1600	14	14	14	14	14	14	14	14	14	14	14	14	10	10	10	10	10	10	7	7	7	7	7	7
1800	14	14	14	14	14	14	14	14	14	14	14	14	10	10	10	10	10	10	7	7	7	7	7	7
2000	14	14	14	14	14	14	14	14	14	14	14	14	10	10	10	10	10	10	7	7	7	7	7	7
2300	14	14	14	14	14	14	14	14	14	14	14	14	10	10	10	10	10	10	7	7	7	7	7	7
2600	14	14	14	14	14	14	14	14	14	14	14	14	10	10	10	10	10	10	7	7	7	7	7	7
3000	14	14	14	14	14	14	14	14	14	14	14	14	10	10	10	10	10	10	7	7	7	7	7	7

Plattella C4 Special

	11						21						22						33					
H.	300	400	500	600	700	900	300	400	500	600	700	900	300	400	500	600	700	900	300	400	500	600	700	900
L.																								
400																20	20					14	14	
500																20	20					14	14	
600																10	10					7	7	
700																10	10					7	7	
800																10	10					7	7	
900																10	10					7	7	
1000																10	10					7	7	
1100																10	10					7	7	
1200																10	10					7	7	
1400																10	10					7	7	
1600																10	10					7	7	
1800																10	10					7	7	
2000																10	10					7	7	
2300																10	10					7	7	
2600																10	10					7	7	
3000																10	10					7	7	

Palletizing

Plattella V6 L

	11						21						22						33					
H.	300	400	500	600	700	900	300	400	500	600	700	900	300	400	500	600	700	900	300	400	500	600	700	900
L.																								
400	28	28	28	28	28	28	28	28	28	28	28	14	20	20	20	20	20	10	14	14	14	14	14	14
500	28	28	28	28	28	28	28	28	28	28	28	14	20	20	20	20	20	10	14	14	14	14	14	14
600	14	14	14	14	14	14	14	14	14	14	14	14	10	10	10	10	10	10	6	6	6	6	6	6
700	14	14	14	14	14	14	14	14	14	14	14	14	10	10	10	10	10	10	6	6	6	6	6	6
800	14	14	14	14	14	14	14	14	14	14	14	14	10	10	10	10	10	10	6	6	6	6	6	6
900	14	14	14	14	14	14	14	14	14	14	14	14	10	10	10	10	10	10	6	6	6	6	6	6
1000	14	14	14	14	14	14	14	14	14	14	14	14	10	10	10	10	10	10	6	6	6	6	6	6
1100	14	14	14	14	14	14	14	14	14	14	14	14	10	10	10	10	10	10	6	6	6	6	6	6
1200	14	14	14	14	14	14	14	14	14	14	14	14	10	10	10	10	10	10	6	6	6	6	6	6
1400	14	14	14	14	14	14	14	14	14	14	14	14	10	10	10	10	10	10	6	6	6	6	6	6
1600	14	14	14	14	14	14	14	14	14	14	14	14	10	10	10	10	10	10	6	6	6	6	6	6
1800	14	14	14	14	14	14	14	14	14	14	14	14	10	10	10	10	10	10	6	6	6	6	6	6
2000	14	14	14	14	14	14	14	14	14	14	14	14	10	10	10	10	10	10	6	6	6	6	6	6
2300	14	14	14	14	14	14	14	14	14	14	14	14	10	10	10	10	10	10	6	6	6	6	6	6
2600	14	14	14	14	14	14	14	14	14	14	14	14	10	10	10	10	10	10	6	6	6	6	6	6
3000	14	14	14	14	14	14	14	14	14	14	14	14	10	10	10	10	10	10	6	6	6	6	6	6

Plattella V6 C

	11						21						22						33					
H.	300	400	500	600	700	900	300	400	500	600	700	900	300	400	500	600	700	900	300	400	500	600	700	900
L.																								
400	28	28	28	28	28	28	28	28	28	28	28	14	20	20	20	20	20	10	14	14	14	14	14	14
500	28	28	28	28	28	28	28	28	28	28	28	14	20	20	20	20	20	10	14	14	14	14	14	14
600	14	14	14	14	14	14	14	14	14	14	14	14	10	10	10	10	10	10	7	7	7	7	7	7
700	14	14	14	14	14	14	14	14	14	14	14	14	10	10	10	10	10	10	7	7	7	7	7	7
800	14	14	14	14	14	14	14	14	14	14	14	14	10	10	10	10	10	10	7	7	7	7	7	7
900	14	14	14	14	14	14	14	14	14	14	14	14	10	10	10	10	10	10	7	7	7	7	7	7
1000	14	14	14	14	14	14	14	14	14	14	14	14	10	10	10	10	10	10	7	7	7	7	7	7
1100	14	14	14	14	14	14	14	14	14	14	14	14	10	10	10	10	10	10	7	7	7	7	7	7
1200	14	14	14	14	14	14	14	14	14	14	14	14	10	10	10	10	10	10	7	7	7	7	7	7
1400	14	14	14	14	14	14	14	14	14	14	14	14	10	10	10	10	10	10	7	7	7	7	7	7
1600	14	14	14	14	14	14	14	14	14	14	14	14	10	10	10	10	10	10	7	7	7	7	7	7
1800	14	14	14	14	14	14	14	14	14	14	14	14	10	10	10	10	10	10	7	7	7	7	7	7
2000	14	14	14	14	14	14	14	14	14	14	14	14	10	10	10	10	10	10	7	7	7	7	7	7
2300	14	14	14	14	14	14	14	14	14	14	14	14	10	10	10	10	10	10	7	7	7	7	7	7
2600	14	14	14	14	14	14	14	14	14	14	14	14	10	10	10	10	10	10	7	7	7	7	7	7
3000	14	14	14	14	14	14	14	14	14	14	14	14	10	10	10	10	10	10	7	7	7	7	7	7

Palletizing

Plattella C4 Hygiene

	10						20						30					
H.	300	400	500	600	700	900	300	400	500	600	700	900	300	400	500	600	700	900
L.																		
400	28	28	28	28	28	28	28	28	28	28	28	14	14	14	14	14	14	14
500	28	28	28	28	28	28	28	28	28	28	28	14	14	14	14	14	14	14
600	14	14	14	14	14	14	14	14	14	14	14	14	7	7	7	7	7	7
700	14	14	14	14	14	14	14	14	14	14	14	14	7	7	7	7	7	7
800	14	14	14	14	14	14	14	14	14	14	14	14	7	7	7	7	7	7
900	14	14	14	14	14	14	14	14	14	14	14	14	7	7	7	7	7	7
1000	14	14	14	14	14	14	14	14	14	14	14	14	7	7	7	7	7	7
1100	14	14	14	14	14	14	14	14	14	14	14	14	7	7	7	7	7	7
1200	14	14	14	14	14	14	14	14	14	14	14	14	7	7	7	7	7	7
1400	14	14	14	14	14	14	14	14	14	14	14	14	7	7	7	7	7	7
1600	14	14	14	14	14	14	14	14	14	14	14	14	7	7	7	7	7	7
1800	14	14	14	14	14	14	14	14	14	14	14	14	7	7	7	7	7	7
2000	14	14	14	14	14	14	14	14	14	14	14	14	7	7	7	7	7	7
2300	14	14	14	14	14	14	14	14	14	14	14	14	7	7	7	7	7	7
2600	14	14	14	14	14	14	14	14	14	14	14	14	7	7	7	7	7	7
3000	14	14	14	14	14	14	14	14	14	14	14	14	7	7	7	7	7	7

Plattella V6 Hygiene

	10						20						30					
H.	300	400	500	600	700	900	300	400	500	600	700	900	300	400	500	600	700	900
L.																		
400	28	28	28	28	28	28	28	28	28	28	28	14	14	14	14	14	14	14
500	28	28	28	28	28	28	28	28	28	28	28	14	14	14	14	14	14	14
600	14	14	14	14	14	14	14	14	14	14	14	14	7	7	7	7	7	7
700	14	14	14	14	14	14	14	14	14	14	14	14	7	7	7	7	7	7
800	14	14	14	14	14	14	14	14	14	14	14	14	7	7	7	7	7	7
900	14	14	14	14	14	14	14	14	14	14	14	14	7	7	7	7	7	7
1000	14	14	14	14	14	14	14	14	14	14	14	14	7	7	7	7	7	7
1100	14	14	14	14	14	14	14	14	14	14	14	14	7	7	7	7	7	7
1200	14	14	14	14	14	14	14	14	14	14	14	14	7	7	7	7	7	7
1400	14	14	14	14	14	14	14	14	14	14	14	14	7	7	7	7	7	7
1600	14	14	14	14	14	14	14	14	14	14	14	14	7	7	7	7	7	7
1800	14	14	14	14	14	14	14	14	14	14	14	14	7	7	7	7	7	7
2000	14	14	14	14	14	14	14	14	14	14	14	14	7	7	7	7	7	7
2300	14	14	14	14	14	14	14	14	14	14	14	14	7	7	7	7	7	7
2600	14	14	14	14	14	14	14	14	14	14	14	14	7	7	7	7	7	7
3000	14	14	14	14	14	14	14	14	14	14	14	14	7	7	7	7	7	7

Palletizing

Plattella C6 Vertical

	10						20						21						22					
H.	1400	1600	1800	2000	2200	2400	1400	1600	1800	2000	2200	2400	1400	1600	1800	2000	2200	2400	1400	1600	1800	2000	2200	2400
L.																								
300	15	15	15	15	15	15	15	15	15	15	15	15	15	15	15	15	15	15	10	10	10	10	10	10
400	15	15	15	15	15	15	15	15	15	15	15	15	15	15	15	15	15	15	10	10	10	10	10	10
500	15	15	15	15	15	15	15	15	15	15	15	15	15	15	15	15	15	15	10	10	10	10	10	10
600	15	15	15	15	15	15	15	15	15	15	15	15	15	15	15	15	15	15	10	10	10	10	10	10
700	15	15	15	15	15	15	15	15	15	15	15	15	15	15	15	15	15	15	10	10	10	10	10	10
900	15	15	15	15	15	15	15	15	15	15	15	15	15	15	15	15	15	15	10	10	10	10	10	10

Linear is designed to meet the most modern aesthetic standards, where elegance becomes a paradigm of streamlined, essential lines and where beauty is combined with technology and greate energy savings, thanks to the configuration of the product itself. An important touch of technological innovation and environmental sustainability.

Linear

Linear range

Linear si caratterizza per l'estetica sobria, lineare e senza tempo che punta a riscaldare ambienti dal diverso stile e destinazione d'uso.

All'estetica versatile, i radiatori a piastra abbinano alto rendimento energetico alla capacità di sfruttare le sorgenti calde a medio-bassa temperatura.

L'utilizzo di acciaio della migliore qualità, un processo produttivo all'avanguardia, la verniciatura brillante e ad alta resistenza con rigorosi test, sono solo alcuni degli elementi che fanno di questa gamma di radiatori un riferimento in termini di affidabilità e versatilità.

Linear è disponibile:

- C4 Compact con 4 attacchi laterali
- C4 Special con interasse speciale
- V6 L con attacco laterale inferiore e 4 attacchi
- V6 C con attacco centrale inferiore e 4 attacchi
- C4 Igiene e V6 Igiene, per la facilità di pulizia senza rinunciare alla resa termica.
- C6 Vertical con 6 attacchi, sono disponibili con altezze da 1400 fino a 2400 mm e larghezze che vanno da 300 a 900 mm.

Innovation

With the largest MADE IN ITALY range of panels, RADIATORS has always been the Italian world leader in this product family.

Quality and performance

Produced using highly automated moulding and welding processes and designed to maximise heat outputs with convection flows, the Linear range also stands out for a number of special characteristics, such as rounded corners and screw-on side panels.

Painting

A distinctive feature of the panels is their high-quality paint finish, thanks to an industrial process borrowed from the automotive sector.

The system used to paint the panels is divided into three phases:

- Hot degreasing and phosphatisation

- Electrophoretic dip coating to apply the base colour evenly in the innermost and outermost parts of the radiator, followed by baking at 185°C

- Epoxy powder coating and baking at 170°C to give the panels a smooth glossy finish. Colouring in White RAL9016, complying with DIN55900.

Certification and compliance marks

The steel panels are CE, NF, RAL certified and all exposed thermal yields are measured and certified according to the European standard EN 442.

Garanzia

Thanks to the top quality standards and implementation of automated control systems, RADIATORS is the only company able to guarantee its hydronic products for 15 years.

LINEAR C4 Compact

Image for illustrative purposes only

Technical specifications
Material: UNI EN 10130:2007 steel
Channel pitch 33.33 mm
Connection thread 1/2" G
Working pressure 10 bar
Test pressure 13 bar
Max. operating temperature 110°C
3-phase painting process:
- hot pretreatment and phosphatisation
- electrophoretic dip base coat
- epoxy powder finish coat

Standard connections and accessoriese
Linear Compact is delivered with:
- top grille
- screw-on side panels for greater safety
- 4 x 1/2" connections

The product is supplied with pre-assembled plastic lids that must be removed before installation and replaced with the supplied caps.

Fixing kit not supplied.

Thermostatic insert and thermostatic head can be ordered separately.

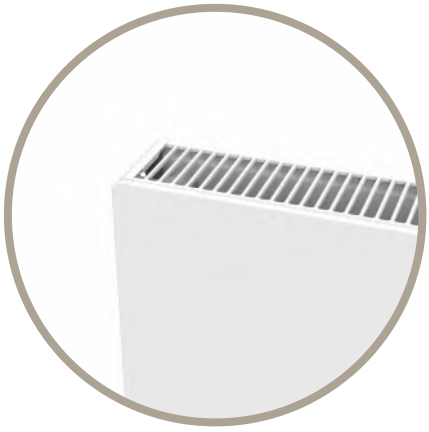

LINEAR C4 Compact

Front view

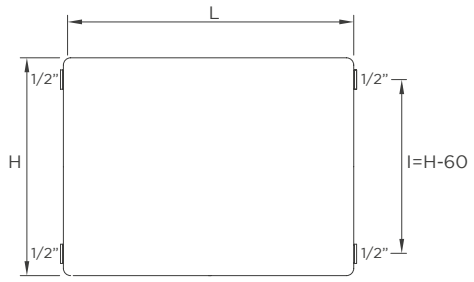

Rear view

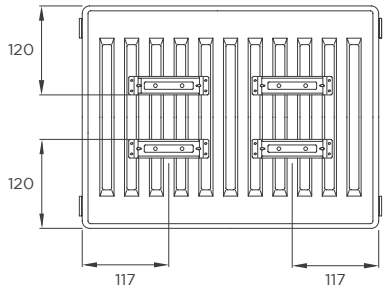

Top view

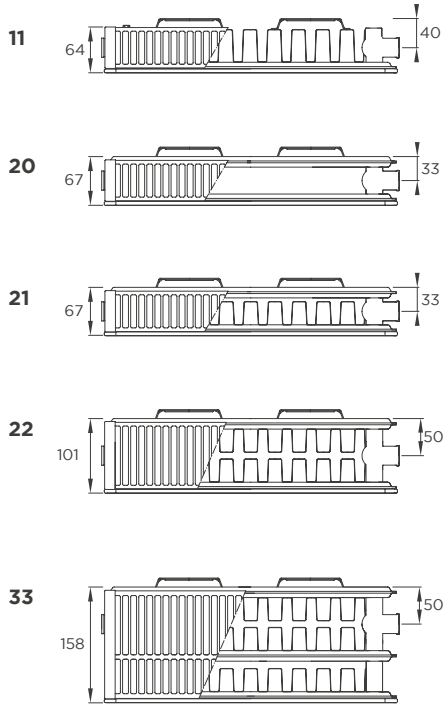

Configurations

In Out

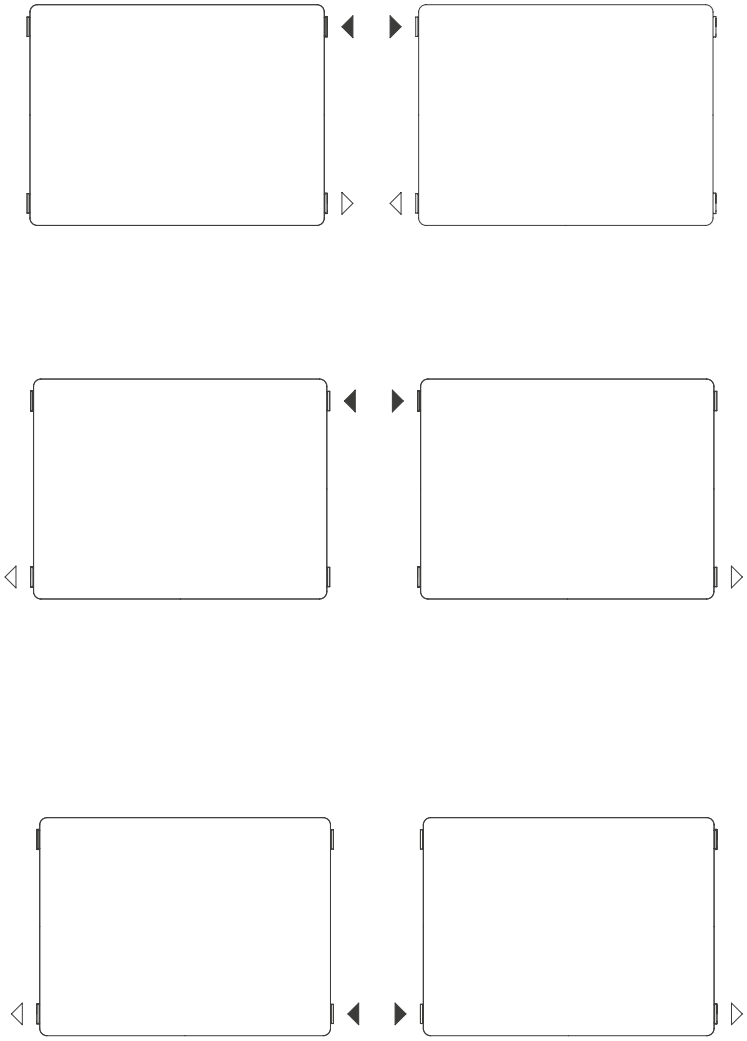

Dimensions are in millimeters (mm)

LINEAR C4 Compact

H 300 - l 240		11			20			21			22			33		
Depth (mm)		64			67			67			101			158		
Exponent (n)		1,254			1,310			1,269			1,292			1,288		
Length (mm)		Output Δt 50°C 75/65-20 W	Output Δt 42,5°C 70/55-20 W	Output Δt 30°C 55/45-20 W	Output Δt 50°C 75/65-20 W	Output Δt 42,5°C 70/55-20 W	Output Δt 30°C 55/45-20 W	Output Δt 50°C 75/65-20 W	Output Δt 42,5°C 70/55-20 W	Output Δt 30°C 55/45-20 W	Output Δt 50°C 75/65-20 W	Output Δt 42,5°C 70/55-20 W	Output Δt 30°C 55/45-20 W	Output Δt 50°C 75/65-20 W	Output Δt 42,5°C 70/55-20 W	Output Δt 30°C 55/45-20 W
400	outp	215	176	113	206	167	106	295	240	154	383	310	198	565	458	293
	cod.	0182113112			0182203112			0182343112			0182223112			0182333112		
500	outp	269	220	142	258	208	132	369	300	193	479	388	247	707	572	366
	cod.	0182113115			0182203115			0182343115			0182223115			0182333115		
600	outp	323	263	170	309	250	158	442	359	231	574	465	296	848	687	439
	cod.	0182112118			0182203118			0182343118			0182223118			0182333118		
700	outp	377	307	198	361	291	185	516	420	270	670	543	346	989	801	512
	cod.	0182113121			0182203121			0182343121			0182223121			0182333121		
800	outp	430	351	227	412	333	211	589	480	308	766	620	395	1130	916	586
	cod.	0182113124			0182203124			0182343124			0182223124			0182333124		
900	outp	484	395	255	464	375	238	664	540	347	861	698	445	1272	1030	659
	cod.	0182113127			0182203127			0182343127			0182223127			0182333127		
1000	outp	538	439	283	515	416	264	722	588	378	957	775	494	1413	1145	732
	cod.	0182113130			0182203130			0182343130			0182223130			0182333130		
1100	outp	592	483	312	567	458	290	810	659	424	1053	853	543	1554	1259	805
	cod.	0182113133			0182203133			0182343133			0182223133			0182333133		
1200	outp	646	527	340	618	500	317	885	720	463	1148	930	593	1696	1373	878
	cod.	0182113136			0182203136			0182343136			0182223136			0182333136		
1400	outp	753	615	397	721	583	370	1032	840	540	1340	1085	692	1978	1602	1025
	cod.	0182113142			0182203142			0182343142			0182223142			0182333142		
1600	outp	861	702	453	824	666	422	1179	959	617	1531	1241	790	2261	1831	1171
	cod.	0182113148			0182203148			0182343148			0182223148			0182333148		
1800	outp	968	790	510	927	749	475	1326	1079	694	1723	1396	889	2543	2060	1318
	cod.	0182113154			0182203154			0182343154			0182223154			0182333154		
2000	outp	1076	878	567	1030	833	528	1474	1199	771	1914	1551	988	2826	2289	1464
	cod.	0182113160			0182203160			0182343160			0182223160			0182333160		
2300	outp	1237	1010	652	1185	957	607	1695	1379	887	2201	1783	1136	3250	2633	1684
	cod.	0182113169			0182203169			0182343169			0182223169			0182333169		
2600	outp	1399	1141	737	1339	1082	686	1916	1559	1002	2488	2016	1284	3674	2976	1903
	cod.	0182113178			0182203178			0182343178			0182223178			0182333178		
3000	outp	1614	1317	850	1545	1249	792	2211	1799	1157	2871	2326	1482	4239	3434	2196
	cod.	0182113190			0182203190			0182343190			0182223190			0182333190		

H 400 - l 340		11			20			21			22			33		
Depth (mm)		64			67			67			101			158		
Exponent (n)		1,259			1,289			1,271			1,294			1,295		
Length (mm)		Output Δt 50°C 75/65-20 W	Output Δt 42,5°C 70/55-20 W	Output Δt 30°C 55/45-20 W	Output Δt 50°C 75/65-20 W	Output Δt 42,5°C 70/55-20 W	Output Δt 30°C 55/45-20 W	Output Δt 50°C 75/65-20 W	Output Δt 42,5°C 70/55-20 W	Output Δt 30°C 55/45-20 W	Output Δt 50°C 75/65-20 W	Output Δt 42,5°C 70/55-20 W	Output Δt 30°C 55/45-20 W	Output Δt 50°C 75/65-20 W	Output Δt 42,5°C 70/55-20 W	Output Δt 30°C 55/45-20 W
400	outp	268	219	141	260	210	134	370	301	193	478	387	247	696	565	360
	cod.	0182114112			0182204112			0182344112			0182224112			0182334112		
500	outp	335	274	176	325	263	168	462	376	241	597	484	309	871	706	450
	cod.	0182114115			0182204115			0182344115			0182224115			0182334115		
600	outp	403	328	212	389	316	202	555	451	290	716	581	370	1045	847	540
	cod.	0182114118			0182204118			0182344118			0182224118			0182334118		
700	outp	470	383	247	454	368	235	647	527	338	836	678	432	1219	988	630
	cod.	0182114121			0182204121			0182344121			0182224121			0182334121		
800	outp	537	438	282	519	421	269	739	601	386	955	774	494	1393	1130	719
	cod.	0182114124			0182204124			0182344124			0182224124			0182334124		
900	outp	604	492	317	584	473	302	832	676	434	1075	871	555	1567	1271	809
	cod.	0182114127			0182204127			0182344127			0182224127			0182334127		
1000	outp	671	547	353	649	526	336	908	738	474	1194	968	617	1741	1412	898
	cod.	0182114130			0182204130			0182344130			0182224130			0182334130		
1100	outp	738	602	388	714	579	370	1017	827	531	1313	1065	679	1915	1553	989
	cod.	0182114133			0182204133			0182344133			0182224133			0182334133		
1200	outp	805	656	423	779	631	403	1110	902	580	1433	1161	740	2089	1694	1079
	cod.	0182114136			0182204136			0182344136			0182224136			0182334136		
1400	outp	939	766	494	909	736	470	1294	1052	676	1672	1355	864	2437	1977	1259
	cod.	0182114142			0182204142			0182344142			0182224142			0182334142		
1600	outp	1073	875	564	1038	842	538	1479	1203	773	1910	1549	987	2786	2259	1439
	cod.	0182114148			0182204148			0182344148			0182224148			0182334148		
1800	outp	1208	985	635	1168	947	605	1663	1353	869	2149	1742	1111	3134	2541	1619
	cod.	0182114154			0182204154			0182344154			0182224154			0182334154		
2000	outp	1342	1094	705	1298	1052	672	1849	1504	966	2388	1936	1234	3482	2824	1799
	cod.	0182114160			0182204160			0182344160			0182224160			0182334160		
2300	outp	1543	1258	811	1493	1210	773	2126	1729	1110	2746	2226	1419	4004	3247	2068
	cod.	0182114169			0182204169			0182344169			0182224169			0182334169		
2600	outp	1744	1422	917	1687	1368	874	2403	1955	1255	3104	2517	1604	4527	3671	2338
	cod.	0182114178			0182204178			0182344178			0182224178			0182334178		
3000	outp	2013	1641	1058	1947	1578	1008	2773	2255	1448	3582	2904	1851	5223	4236	2698
	cod.	0182114190			0182204190			0182344190			0182224190			0182334190		

For coloured versions, please contact RADIATORS customer service

LINEAR C4 Compact

H 500 - l 440		11			20			21			22			33		
Depth (mm)		64			67			67			101			158		
Exponent (n)		1,263			1,268			1,274			1,296			1,301		
Length (mm)		Output Δt 50°C 75/65-20 W	Output Δt 42,5°C 70/55-20 W	Output Δt 30°C 55/45-20 W	Output Δt 50°C 75/65-20 W	Output Δt 42,5°C 70/55-20 W	Output Δt 30°C 55/45-20 W	Output Δt 50°C 75/65-20 W	Output Δt 42,5°C 70/55-20 W	Output Δt 30°C 55/45-20 W	Output Δt 50°C 75/65-20 W	Output Δt 42,5°C 70/55-20 W	Output Δt 30°C 55/45-20 W	Output Δt 50°C 75/65-20 W	Output Δt 42,5°C 70/55-20 W	Output Δt 30°C 55/45-20 W
400	outp	320	261	168	312	254	163	441	358	230	569	462	294	823	666	423
	cod.	0182115112			0182205112			0182345112			0182225112			0182335112		
500	outp	400	326	210	390	318	204	552	449	288	712	577	367	1029	833	529
	cod.	0182115115			0182205115			0182345115			0182225115			0182335115		
600	outp	480	391	252	468	381	245	662	538	345	854	692	441	1235	999	635
	cod.	0182115118			0182205118			0182345118			0182225118			0182335118		
700	outp	560	456	294	546	445	286	772	627	402	996	808	514	1441	1166	741
	cod.	0182115121			018220521			0182345121			0182225121			0182335121		
800	outp	640	522	336	624	508	326	882	717	460	1138	923	588	1646	1332	847
	cod.	0182115124			0182205124			0182345124			0182225124			0182335124		
900	outp	720	587	378	702	572	367	993	807	518	1281	1038	661	1852	1499	953
	cod.	0182115127			0182205127			0182345127			0182225127			0182335127		
1000	outp	800	652	420	780	635	408	1083	880	565	1423	1154	734	2058	1666	1059
	cod.	0182115130			0182205130			0182345130			0182225130			0182335130		
1100	outp	880	717	462	858	699	449	1212	986	632	1565	1269	808	2264	1832	1165
	cod.	0182115133			0182205133			0182345133			0182225133			0182335133		
1200	outp	960	782	504	936	762	490	1323	1076	690	1708	1385	882	2470	1999	1270
	cod.	0182115136			0182205136			0182345136			0182225136			0182335136		
1400	outp	1120	913	588	1092	889	571	1543	1255	805	1992	1615	1028	2881	2332	1482
	cod.	0182115142			0182205142			0182345142			0182225142			0182335142		
1600	outp	1280	1043	672	1248	1016	653	1764	1434	920	2277	1846	1175	3293	2665	1694
	cod.	0182115148			0182205148			0182345148			0182225148			0182335148		
1800	outp	1441	1174	755	1404	1143	734	1984	1613	1035	2561	2077	1322	3704	2998	1906
	cod.	0182115154			0182205154			0182345154			0182225154			0182335154		
2000	outp	1601	1304	839	1560	1270	816	2205	1793	1150	2846	2308	1469	4116	3331	2117
	cod.	0182115160			0182205160			0182345160			0182225160			0182335160		
2300	outp	1841	1500	965	1794	1461	938	2536	2062	1323	3273	2654	1690	4733	3831	2435
	cod.	0182115169			0182205169			0182345169			0182225169			0182335169		
2600	outp	2081	1695	1091	2028	1651	1061	2867	2330	1495	3700	3000	1910	5351	4330	2752
	cod.	0182115178			0182205178			0182345178			0182225178			0182335178		
3000	outp	2401	1956	1259	2340	1905	1224	3307	2689	1725	4269	3461	2204	6174	4997	3176
	cod.	0182115190			0182205190			0182345190			0182225190			0182335190		

H 600 - l 540		11			20			21			22			33		
Depth (mm)		64			67			67			101			158		
Exponent (n)		1,268			1,248			1,277			1,298			1,307		
Length (mm)		Output Δt 50°C 75/65-20 W	Output Δt 42,5°C 70/55-20 W	Output Δt 30°C 55/45-20 W	Output Δt 50°C 75/65-20 W	Output Δt 42,5°C 70/55-20 W	Output Δt 30°C 55/45-20 W	Output Δt 50°C 75/65-20 W	Output Δt 42,5°C 70/55-20 W	Output Δt 30°C 55/45-20 W	Output Δt 50°C 75/65-20 W	Output Δt 42,5°C 70/55-20 W	Output Δt 30°C 55/45-20 W	Output Δt 50°C 75/65-20 W	Output Δt 42,5°C 70/55-20 W	Output Δt 30°C 55/45-20 W
400	outp	371	302	194	364	297	192	509	414	265	659	534	340	949	766	486
	cod.	018216112			0182206112			0182346112			0182226112			0182336112		
500	outp	464	378	243	455	372	241	636	517	331	824	668	425	1186	957	607
	cod.	0182116115			0182206115			0182346115			0182226115			0182336115		
600	outp	557	454	291	546	446	289	765	621	398	988	801	510	1423	1149	729
	cod.	0182116118			0182206118			0182346118			0182226118			0182336118		
700	outp	650	529	340	637	520	337	892	725	464	1153	935	595	1660	1340	850
	cod.	0182116121			0182206121			0182346121			0182226121			0182336121		
800	outp	743	605	389	728	594	385	1019	828	531	1318	1068	680	1898	1532	972
	cod.	0182116124			0182206124			0182346124			0182226124			0182336124		
900	outp	836	680	437	819	669	433	1146	931	597	1482	1202	765	2135	1723	1093
	cod.	0182116127			0182206127			0182346127			0182226127			0182336127		
1000	outp	929	756	486	910	743	481	1253	1018	653	1647	1335	849	2372	1915	1216
	cod.	0182116130			0182206130			0182346130			0182226130			0182336130		
1100	outp	1021	832	534	1001	817	529	1401	1138	730	1812	1469	935	2609	2106	1336
	cod.	0182116133			0182206133			0182346133			0182226133			0182336133		
1200	outp	1114	907	583	1092	892	577	1528	1242	796	1976	1603	1020	2846	2298	1457
	cod.	0182116136			0182206136			0182346136			0182226136			0182336136		
1400	outp	1300	1058	680	1274	1040	673	1783	1448	928	2306	1870	1190	3321	2681	1700
	cod.	0182116142			0182206142			0182346142			0182226142			0182336142		
1600	outp	1486	1210	777	1456	1189	770	2038	1656	1062	2635	2137	1360	3795	3064	1943
	cod.	0182116148			0182206148			0182346148			0182226148			0182336148		
1800	outp	1671	1361	874	1638	1337	866	2293	1863	1194	2965	2404	1530	4270	3447	2186
	cod.	0182116154			0182206154			0182346154			0182226154			0182336154		
2000	outp	1857	1512	971	1820	1486	962	2547	2070	1327	3294	2671	1700	4744	3830	2429
	cod.	0182116160			0182206160			0182346160			0182226160			0182336160		
2300	outp	2136	1739	1117	2093	1709	1106	2929	2380	1525	3788	3072	1954	5456	4404	2793
	cod.	0182116169			0182206169			0182346169			0182226169			0182336169		
2600	outp	2414	1966	1263	2366	1932	1251	3312	2691	1725	4282	3472	2209	6167	4978	3158
	cod.	0182116178			0182206178			0182346178			0182226178			0182336178		
3000	outp	2786	2268	1457	2730	2229	1443	3821	3105	1990	4941	4006	2549	7116	5744	3644
	cod.	0182116190			0182206190			0182346190			0182226190			0182336190		

For coloured versions, please contact RADIATORS customer service

LINEAR C4 Compact

H 700 - I 640		11			20			21			22			33		
Depth (mm)		64			67			67			101			158		
Exponent (n)		1,277			1,251			1,286			1,309			1,316		
Length (mm)		Output Δt 50°C 75/65-20 W	Output Δt 42,5°C 70/55-20 W	Output Δt 30°C 55/45-20 W	Output Δt 50°C 75/65-20 W	Output Δt 42,5°C 70/55-20 W	Output Δt 30°C 55/45-20 W	Output Δt 50°C 75/65-20 W	Output Δt 42,5°C 70/55-20 W	Output Δt 30°C 55/45-20 W	Output Δt 50°C 75/65-20 W	Output Δt 42,5°C 70/55-20 W	Output Δt 30°C 55/45-20 W	Output Δt 50°C 75/65-20 W	Output Δt 42,5°C 70/55-20 W	Output Δt 30°C 55/45-20 W
400	outp	423	343	220	416	340	220	576	467	298	747	605	383	1074	867	548
	cod.	0182117112			0182207112			0182347112			0182227112			0182337112		
500	outp	528	429	275	520	425	275	720	584	372	934	756	479	1343	1084	685
	cod.	0182117115			0182207115			0182347115			0182227115			0182337115		
600	outp	634	515	330	624	509	329	863	701	446	1121	907	575	1611	1301	823
	cod.	0182117118			0182207118			0182347118			0182227118			0182337118		
700	outp	739	601	385	728	594	384	1007	818	521	1308	1058	671	1880	1518	960
	cod.	0182117121			0182207121			0182347121			0182227121			0182337121		
800	outp	845	686	440	832	679	439	1151	934	595	1494	1210	767	2148	1734	1097
	cod.	0182117124			0182207124			0182347124			0182227124			0182337124		
900	outp	951	772	495	936	764	494	1295	1051	670	1681	1361	863	2417	1951	1234
	cod.	0182117127			0182207127			0182347127			0182227127			0182337127		
1000	outp	1056	858	550	1040	849	549	1413	1147	733	1868	1512	957	2685	2168	1371
	cod.	0182117130			0182207130			0182347130			0182227130			0182337130		
1100	outp	1162	944	605	1144	934	604	1583	1285	818	2055	1663	1054	2954	2385	1508
	cod.	0182117133			0182207133			0182347133			0182227133			0182337133		
1200	outp	1268	1030	660	1248	1019	659	1727	1402	893	2242	1814	1150	3222	2602	1645
	cod.	0182117136			0182207136			0182347136			0182227136			0182337136		
1400	outp	1479	1201	770	1456	1189	769	2015	1635	1042	2615	2117	1342	3759	3035	1919
	cod.	0182117142			0182207142			0182347142			0182227142			0182337142		
1600	outp	1690	1373	880	1664	1358	878	2302	1869	1190	2989	2419	1534	4296	3469	2193
	cod.	0182117148			0182207148			0182347148			0182227148			0182337148		
1800	outp	1902	1544	990	1872	1528	988	2590	2102	1339	3362	2722	1725	4833	3902	2468
	cod.	0182117154			0182207154			0182347154			0182227154			0182337154		
2000	outp	2113	1716	1100	2080	1698	1098	2878	2336	1488	3736	3024	1917	5370	4336	2742
	cod.	0182117160			0182207160			0182347160			0182227160			0182337160		
2300	outp	2430	1973	1265	2392	1953	1263	3310	2686	1711	4296	3478	2204	6176	4986	3153
	cod.	0182117169			0182207169			0182347169			0182227169			0182337169		
2600	outp	2747	2231	1430	2704	2207	1427	3741	3037	1934	4857	3931	2492	6981	5637	3564
	cod.	0182117178			0182207178			0182347178			0182227178			0182337178		
3000	outp	3169	2574	1650	3120	2547	1647	4317	3504	2232	5604	4536	2875	8055	6504	4113
	cod.	0182117190			0182207190			0182347190			0182227190			0182337190		

H 900 - I 840		11			20			21			22			33		
Depth (mm)		64			67			67			101			158		
Exponent (n)		1,296			1,257			1,305			1,331			1,333		
Length (mm)		Output Δt 50°C 75/65-20 W	Output Δt 42,5°C 70/55-20 W	Output Δt 30°C 55/45-20 W	Output Δt 50°C 75/65-20 W	Output Δt 42,5°C 70/55-20 W	Output Δt 30°C 55/45-20 W	Output Δt 50°C 75/65-20 W	Output Δt 42,5°C 70/55-20 W	Output Δt 30°C 55/45-20 W	Output Δt 50°C 75/65-20 W	Output Δt 42,5°C 70/55-20 W	Output Δt 30°C 55/45-20 W	Output Δt 50°C 75/65-20 W	Output Δt 42,5°C 70/55-20 W	Output Δt 30°C 55/45-20 W
400	outp	526	426	271	521	425	274	703	569	361	922	744	468	1327	1068	672
	cod.	0182119112			0182209112			0182349112			0182229112			0182339112		
500	outp	658	533	339	652	531	343	879	711	451	1153	930	585	1659	1335	839
	cod.	0182119115			0182209115			0182349115			0182229115			0182339115		
600	outp	789	640	407	782	637	411	1055	853	542	1384	1116	702	1991	1602	1007
	cod.	0182119118			0182209118			0182349118			0182229118			0182339118		
700	outp	921	746	475	912	743	480	1231	996	632	1614	1302	819	2323	1870	1175
	cod.	0182119121			0182209121			0182349121			0182229121			0182339121		
800	outp	1052	853	543	1042	850	548	1407	1138	722	1845	1488	936	2654	2137	1343
	cod.	0182119124			0182209124			0182349124			0182229124			0182339124		
900	outp	1184	959	611	1173	956	617	1582	1280	812	2075	1675	1053	2986	2404	1511
	cod.	0182119127			0182209127			0182349127			0182229127			0182339127		
1000	outp	1315	1066	678	1303	1062	685	1728	1398	887	2306	1861	1169	3318	2671	1679
	cod.	0182119130			0182209130			0182349130			0182229130			0182339130		
1100	outp	1447	1173	746	1433	1168	754	1934	1565	993	2537	2047	1287	3650	2938	1847
	cod.	0182119133			0182209133			0182349133			0182229133			0182339133		
1200	outp	1578	1279	814	1564	1274	822	2109	1706	1083	2767	2233	1404	3982	3205	2015
	cod.	0182119136			0182209136			0182349136			0182229136			0182339136		
1400	outp	1842	1492	950	1824	1487	959	2462	1991	1264	3228	2605	1638	4645	3739	2350
	cod.	0182119142			0182209142			0182349142			0182229142			0182339142		
1600	outp	2105	1706	1085	2085	1699	1096	2813	2275	1444	3690	2977	1873	5309	4273	2686
	cod.	0182119148			0182209148			0182349148			0182229148			0182339148		
1800	outp	2368	1919	1221	2345	1912	1233	3165	2560	1625	4151	3349	2107	5972	4807	3022
	cod.	0182119154			0182209154			0182349154			0182229154			0182339154		
2000	outp	2631	2132	1357	2606	2124	1370	3516	2844	1805	4612	3721	2341	6636	5342	3358
	cod.	0182119160			0182209160			0182349160			0182229160			0182339160		
2300	outp	3025	2452	1560	2997	2443	1576	4043	3271	2076	5304	4279	2692	7631	6143	3861
	cod.	0182119169			0182209169			0182349169			0182229169			0182339169		
2600	outp	3420	2772	1764	3388	2761	1781	4571	3697	2347	5996	4838	3043	8627	6944	4365
	cod.	0182119178			0182209178			0182349178			0182229178			0182339178		
3000	outp	3946	3198	2035	3909	3186	2055	5274	4266	2708	6918	5582	3511	9954	8012	5036
	cod.	0182119190			0182209190			0182349190			0182229190			0182339190		

For coloured versions, please contact RADIATORS customer service

Note

LINEAR C4 Special

Linear C4 Special is designed to provide a radiant panel able to replace old aluminium radiators with particular pipe centres. Versions with special pipe centres are available only for Compact models 22 and 33. Unlike the shaped Plattella models, the Linear models cannot be rotated to locate the side 1 special pipe centre on the right or left. The codes in the table refer to the side 1 special pipe centre on the right.

Image for illustrative purposes only

Technical specifications
Material: UNI EN 10130:2007 steel
Channel pitch 33.33 mm
Connection thread 1/2" G
Working pressure 10 bar
Test pressure 13 bar
Max. operating temperature 110°C
3-phase painting process:
- hot pretreatment and phosphatisation
- electrophoretic dip base coat
- epoxy powder finish coat

Standard connections and accessories
Linear Compact is delivered with:
- top grille
- screw-on side panels for greater safety
- 4 x 1/2" connections
- plugs and vent included

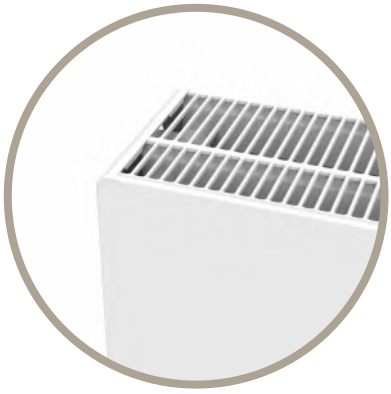

The product is supplied with pre-assembled plastic lids that must be removed before installation and replaced with the supplied caps.

Fixing kit not supplied.

Thermostatic insert and thermostatic head can be ordered separately.

Reversibility
Double pipe centre:
- I1 = H-100
- I2 = H-60

LINEAR C4 Special

Front view

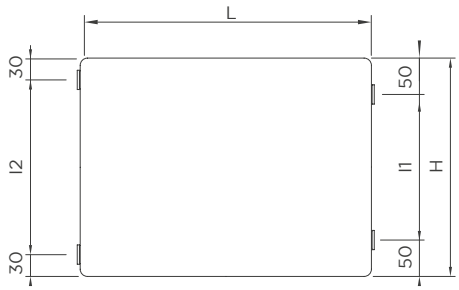

Rear view

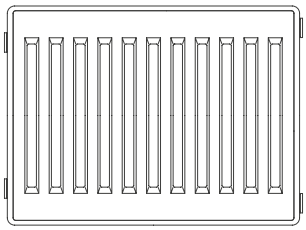

Top view

22

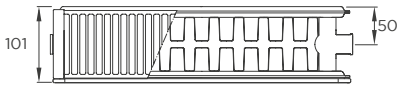

33

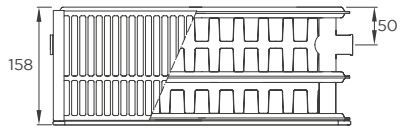

Configurations

In Out

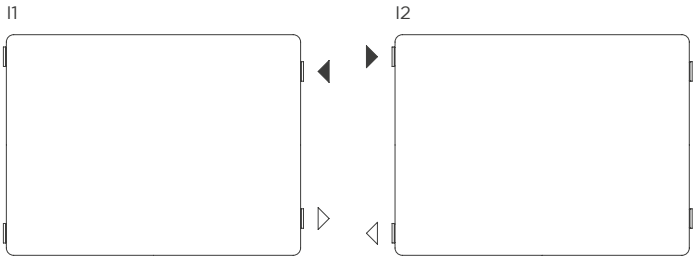

Dimensions are in millimeters (mm)

LINEAR C4 Special

H 600 -l1 500 / l2 540		22			33		
Depth (mm)		101			158		
Exponent (n)		1,298			1,307		
Length (mm)		Output Δt 50°C 75/65-20 W	Output Δt 42,5°C 70/55-20 W	Output Δt 30°C 55/45-20 W	Output Δt 50°C 75/65-20 W	Output Δt 42,5°C 70/55-20 W	Output Δt 30°C 55/45-20 W
400	outp	659	534	340	949	766	486
	cod.	0182286912			0182386912		
500	outp	824	668	425	1186	957	607
	cod.	0182286915			0182386915		
600	outp	988	801	510	1423	1149	729
	cod.	0182286918			0182386918		
700	outp	1153	935	595	1660	1340	850
	cod.	0182286921			0182386921		
800	outp	1318	1068	680	1898	1532	972
	cod.	0182286924			0182386924		
900	outp	1482	1202	765	2135	1723	1093
	cod.	0182286927			0182386927		
1000	outp	1647	1335	849	2372	1915	1216
	cod.	0182286930			0182386930		
1100	outp	1812	1469	935	2609	2106	1336
	cod.	0182286933			0182386933		
1200	outp	1976	1603	1020	2846	2298	1457
	cod.	0182286936			0182386936		
1400	outp	2306	1870	1190	3321	2681	1700
	cod.	0182286942			0182386942		
1600	outp	2635	2137	1360	3795	3064	1943
	cod.	0182286948			0182386948		
1800	outp	2965	2404	1530	4270	3447	2186
	cod.	0182286954			0182386954		
2000	outp	3294	2671	1700	4744	3830	2429
	cod.	0182286960			0182386960		
2300	outp	3788	3072	1954	5456	4404	2793
	cod.	0182286969			0182386969		
2600	outp	4282	3472	2209	6167	4978	3158
	cod.	0182286978			0182386978		
3000	outp	4941	4006	2549	7116	5744	3644
	cod.	0182286990			0182386990		

H 700 -l1 600 / l2 640		22			33		
Depth (mm)		101			158		
Exponent (n)		1,309			1,316		
Length (mm)		Output Δt 50°C 75/65-20 W	Output Δt 42,5°C 70/55-20 W	Output Δt 30°C 55/45-20 W	Output Δt 50°C 75/65-20 W	Output Δt 42,5°C 70/55-20 W	Output Δt 30°C 55/45-20 W
400	outp	747	605	383	1074	867	548
	cod.	0182287912			0182387912		
500	outp	934	756	479	1343	1084	685
	cod.	0182287915			0182387915		
600	outp	1121	907	575	1611	1301	823
	cod.	0182287918			0182387918		
700	outp	1308	1058	671	1880	1518	960
	cod.	0182287921			0182387921		
800	outp	1494	1210	767	2148	1734	1097
	cod.	0182287924			0182387924		
900	outp	1681	1361	863	2417	1951	1234
	cod.	0182287927			0182387927		
1000	outp	1868	1512	957	2685	2168	1371
	cod.	0182287930			0182387930		
1100	outp	2055	1663	1054	2954	2385	1508
	cod.	0182287933			0182387933		
1200	outp	2242	1814	1150	3222	2602	1645
	cod.	0182287936			0182387936		
1400	outp	2615	2117	1342	3759	3035	1919
	cod.	0182287942			0182387942		
1600	outp	2989	2419	1534	4296	3469	2193
	cod.	0182287948			0182387948		
1800	outp	3362	2722	1725	4833	3902	2468
	cod.	0182287954			0182387954		
2000	outp	3736	3024	1917	5370	4336	2742
	cod.	0182287960			0182387960		
2300	outp	4296	3478	2204	6176	4986	3153
	cod.	0182287969			0182387969		
2600	outp	4857	3931	2492	6981	5637	3564
	cod.	0182287978			0182387978		
3000	outp	5604	4536	2875	8055	6504	4113
	cod.	0182287990			0182387990		

For coloured versions, please contact RADIATORS customer service

Note

LINEAR V6 L

Image for illustrative purposes only

Technical specifications
Material: UNI EN 10130:2007 steel
Channel pitch 33.33 mm
Connection thread 1/2" G - 3/4" G
Working pressure 10 bar
Test pressure 13 bar
Max. operating temperature 110°C
3-phase painting process:
- hot pretreatment and phosphatisation
- electrophoretic dip base coat
- epoxy powder finish coat

Standard connections and accessories
Linear with right side connection is delivered with:
- top grille
- screw-on side panels for greater safety
- 4 x 1/2" side connections
- 2 x 3/4" bottom connections, external thread, 50 mm pipe centre
- 3 x 1/2" blind plugs
- 1 x 1/2" vent plug

The product comes with pre-installed plastic covers that must be removed before installation and, if necessary, replaced with caps that can be purchased separately.

Fixing kit not supplied.

Thermostatic insert and thermostatic head can be ordered separately.

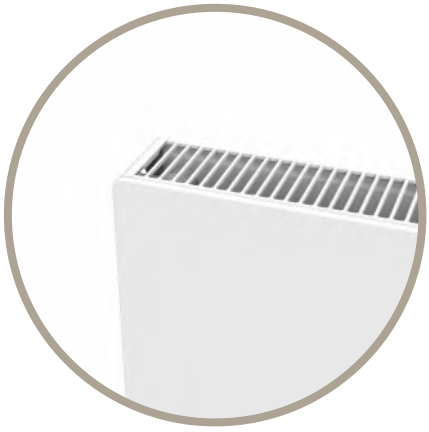

LINEAR V6 L

Front view

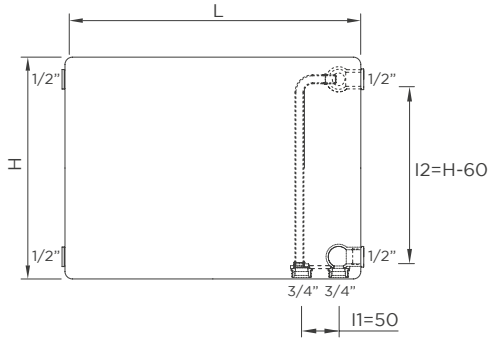

Configurations

In

Out

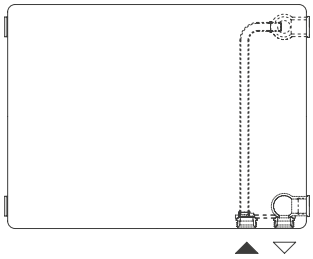

Rear view mod. 11

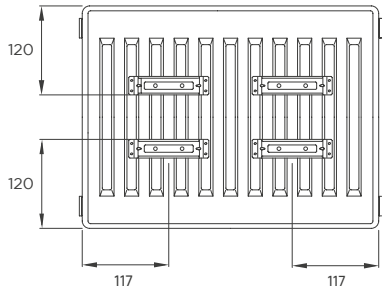

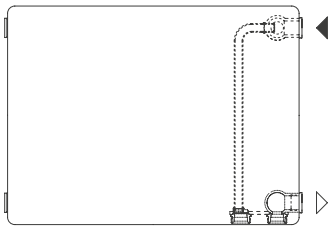

Top view

11

20

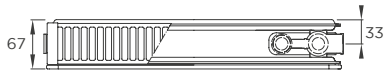

21

22

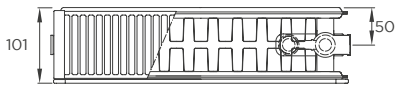

33

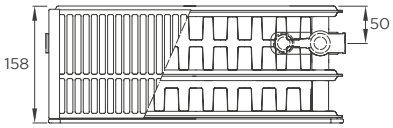

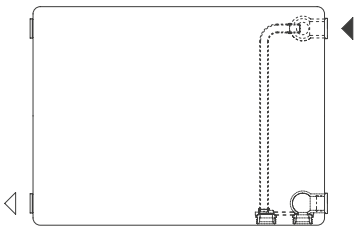

Dimensions are in millimeters (mm)

LINEAR V6 L

H 300 - l1 50 / l2 240		11			20			21			22			33		
Depth (mm)		64			67			67			101			158		
Exponent (n)		1,254			1,310			1,269			1,292			1,288		
Length (mm)		Output Δt 50°C 75/65-20 W	Output Δt 42,5°C 70/55-20 W	Output Δt 30°C 55/45-20 W	Output Δt 50°C 75/65-20 W	Output Δt 42,5°C 70/55-20 W	Output Δt 30°C 55/45-20 W	Output Δt 50°C 75/65-20 W	Output Δt 42,5°C 70/55-20 W	Output Δt 30°C 55/45-20 W	Output Δt 50°C 75/65-20 W	Output Δt 42,5°C 70/55-20 W	Output Δt 30°C 55/45-20 W	Output Δt 50°C 75/65-20 W	Output Δt 42,5°C 70/55-20 W	Output Δt 30°C 55/45-20 W
400	outp	215	176	113	206	166	106	295	240	154	383	310	198	565	458	293
	cod.	0182113612			0182203612			0182343612			0182223612			0182333612		
500	outp	269	220	142	258	208	132	369	300	193	479	388	247	707	572	366
	cod.	0182113615			0182203615			0182343615			0182223615			0182333615		
600	outp	323	263	170	309	250	158	442	359	231	574	465	296	848	687	439
	cod.	0182113618			0182203618			0182343618			0182223618			0182333618		
700	outp	377	307	198	361	291	185	516	420	270	670	543	346	989	801	512
	cod.	0182113621			0182203621			0182343621			0182223621			0182333621		
800	outp	430	351	227	412	333	211	589	480	308	766	620	395	1130	916	586
	cod.	0182113624			0182203624			0182343624			0182223624			0182333624		
900	outp	484	395	255	464	374	238	664	540	347	861	698	445	1272	1030	659
	cod.	0182113627			0182203627			0182343627			0182223627			0182333627		
1000	outp	538	439	283	515	416	264	722	588	378	957	775	494	1413	1145	732
	cod.	0182113630			0182203630			0182343630			0182223630			0182333630		
1100	outp	592	483	312	567	458	290	810	659	424	1053	853	543	1554	1259	805
	cod.	0182113633			0182203633			0182343633			0182223633			0182333633		
1200	outp	646	527	340	618	499	317	885	720	463	1148	930	593	1696	1373	878
	cod.	0182113636			0182203636			0182343636			0182223636			0182333636		
1400	outp	753	615	397	721	582	370	1032	840	540	1340	1085	692	1978	1602	1025
	cod.	0182113642			0182203642			0182343642			0182223642			0182333642		
1600	outp	861	702	453	824	666	422	1179	959	617	1531	1241	790	2261	1831	1171
	cod.	0182113648			0182203648			0182343648			0182223648			0182333648		
1800	outp	968	790	510	927	749	475	1326	1079	694	1723	1396	889	2543	2060	1318
	cod.	0182113654			0182203654			0182343654			0182223654			0182333654		
2000	outp	1076	878	567	1030	832	528	1474	1199	771	1914	1551	988	2826	2289	1464
	cod.	0182113660			0182203660			0182343660			0182223660			0182333660		
2300	outp	1237	1010	652	1185	957	607	1695	1379	887	2201	1783	1136	3250	2633	1684
	cod.	0182113669			0182203669			0182343669			0182223669			0182333669		
2600	outp	1399	1141	737	1339	1082	686	1916	1559	1002	2488	2016	1284	3674	2976	1903
	cod.	0182113678			0182203678			0182343678			0182223678			0182333678		
3000	outp	1614	1317	850	1545	1248	792	2211	1799	1157	2871	2326	1482	4239	3434	2196
	cod.	0182113690			0182203690			0182343690			0182223690			0182333690		

H 400 - l1 50 / l2 340		11			20			21			22			33		
Depth (mm)		64			67			67			101			158		
Exponent (n)		1,259			1,289			1,271			1,294			1,295		
Length (mm)		Output Δt 50°C 75/65-20 W	Output Δt 42,5°C 70/55-20 W	Output Δt 30°C 55/45-20 W	Output Δt 50°C 75/65-20 W	Output Δt 42,5°C 70/55-20 W	Output Δt 30°C 55/45-20 W	Output Δt 50°C 75/65-20 W	Output Δt 42,5°C 70/55-20 W	Output Δt 30°C 55/45-20 W	Output Δt 50°C 75/65-20 W	Output Δt 42,5°C 70/55-20 W	Output Δt 30°C 55/45-20 W	Output Δt 50°C 75/65-20 W	Output Δt 42,5°C 70/55-20 W	Output Δt 30°C 55/45-20 W
400	outp	268	219	141	260	211	134	370	301	193	478	387	247	696	565	360
	cod.	0182114612			0182204612			0182344612			0182224612			0182334612		
500	outp	335	274	176	325	264	168	462	376	241	597	484	309	871	706	450
	cod.	0182114615			0182204615			0182344615			0182224615			0182334615		
600	outp	403	328	212	389	316	202	555	451	290	716	581	370	1045	847	540
	cod.	0182114618			0182204618			0182344618			0182224618			0182334618		
700	outp	470	383	247	454	369	235	647	527	338	836	678	432	1219	988	630
	cod.	0182114621			0182204621			0182344621			0182224621			0182334621		
800	outp	537	438	282	519	422	269	739	601	386	955	774	494	1393	1130	719
	cod.	0182114624			0182204624			0182344624			0182224624			0182334624		
900	outp	604	492	317	584	474	302	832	676	434	1075	871	555	1567	1271	809
	cod.	0182114627			0182204627			0182344627			0182224627			0182334627		
1000	outp	671	547	353	649	527	336	908	738	474	1194	968	617	1741	1412	898
	cod.	0182114630			0182204630			0182344630			0182224630			0182334630		
1100	outp	738	602	388	714	580	370	1017	827	531	1313	1065	679	1915	1553	989
	cod.	0182114633			0182204633			0182344633			0182224633			0182334633		
1200	outp	805	656	423	779	632	403	1110	902	580	1433	1161	740	2089	1694	1079
	cod.	0182114636			0182204636			0182344636			0182224636			0182334636		
1400	outp	939	766	494	909	738	470	1294	1052	676	1672	1355	864	2437	1977	1259
	cod.	0182114642			0182204642			0182344642			0182224642			0182334642		
1600	outp	1073	875	564	1038	843	538	1479	1203	773	1910	1549	987	2786	2259	1439
	cod.	0182114648			0182204648			0182344648			0182224648			0182334648		
1800	outp	1208	985	635	1168	949	605	1663	1353	869	2149	1742	1111	3134	2541	1619
	cod.	0182114654			0182204654			0182344654			0182224654			0182334654		
2000	outp	1342	1094	705	1298	1054	672	1849	1504	966	2388	1936	1234	3482	2824	1799
	cod.	0182114660			0182204660			0182344660			0182224660			0182334660		
2300	outp	1543	1258	811	1493	1212	773	2126	1729	1110	2746	2226	1419	4004	3247	2068
	cod.	0182114669			0182204669			0182344669			0182224669			0182334669		
2600	outp	1744	1422	917	1687	1370	874	2403	1955	1255	3104	2517	1604	4527	3671	2338
	cod.	0182114678			0182204678			0182344678			0182224678			0182334678		
3000	outp	2013	1641	1058	1947	1581	1008	2773	2255	1448	3582	2904	1851	5223	4236	2698
	cod.	0182114690			0182204690			0182344690			0182224690			0182334690		

For coloured versions, please contact RADIATORS customer service

LINEAR V6 L

H 500 - I1 50 / I2 440		11			20			21			22			33		
Depth (mm)		64			67			67			101			158		
Exponent (n)		1,263			1,268			1,274			1,296			1,301		
Length (mm)		Output Δt 50°C 75/65-20 W	Output Δt 42,5°C 70/55-20 W	Output Δt 30°C 55/45-20 W	Output Δt 50°C 75/65-20 W	Output Δt 42,5°C 70/55-20 W	Output Δt 30°C 55/45-20 W	Output Δt 50°C 75/65-20 W	Output Δt 42,5°C 70/55-20 W	Output Δt 30°C 55/45-20 W	Output Δt 50°C 75/65-20 W	Output Δt 42,5°C 70/55-20 W	Output Δt 30°C 55/45-20 W	Output Δt 50°C 75/65-20 W	Output Δt 42,5°C 70/55-20 W	Output Δt 30°C 55/45-20 W
400	outp	320	261	168	312	254	163	441	358	230	569	462	294	823	666	423
	cod.	0182115612			0182205612			0182345612			0182225612			0182335612		
500	outp	400	326	210	390	318	204	552	449	288	712	577	367	1029	833	529
	cod.	0182115615			0182205615			0182345615			0182225615			0182335615		
600	outp	480	391	252	468	381	245	662	538	345	854	692	441	1029	833	529
	cod.	0182115618			0182205618			0182345618			0182225618			0182335618		
700	outp	560	456	294	546	445	286	772	627	402	996	808	514	1441	1166	741
	cod.	0182115621			0182205621			0182345621			0182225621			0182335621		
800	outp	640	522	336	624	508	326	882	717	460	1138	923	588	1646	1332	847
	cod.	0182115624			0182205624			0182345624			0182225624			0182335624		
900	outp	720	587	378	702	572	367	993	807	518	1281	1038	661	1852	1499	953
	cod.	0182115627			0182205627			0182345627			0182225627			0182335627		
1000	outp	800	652	420	780	635	408	1083	880	565	1423	1154	734	2058	1666	1059
	cod.	0182115630			0182205630			0182345630			0182225630			0182335630		
1100	outp	880	717	462	858	699	449	1212	986	632	1565	1269	808	2264	1832	1165
	cod.	0182115633			0182205633			0182345633			0182225633			0182335633		
1200	outp	960	782	504	936	762	490	1323	1076	690	1708	1385	882	2470	1999	1270
	cod.	0182115636			0182205636			0182345636			0182225636			0182335636		
1400	outp	1120	913	588	1092	889	571	1543	1255	805	1992	1615	1028	2881	2332	1482
	cod.	0182115642			0182205642			0182345642			0182225642			0182335642		
1600	outp	1280	1043	672	1248	1016	653	1764	1434	920	2277	1846	1175	3293	2665	1694
	cod.	0182115648			0182205648			0182345648			0182225648			0182335648		
1800	outp	1441	1174	755	1404	1143	734	1984	1613	1035	2561	2077	1322	3704	2998	1906
	cod.	0182115654			0182205654			0182345654			0182225654			0182335654		
2000	outp	1601	1304	839	1560	1270	816	2205	1793	1150	2846	2308	1469	4116	3331	2117
	cod.	0182115660			0182205660			0182345660			0182225660			0182335660		
2300	outp	1841	1500	965	1794	1461	938	2536	2062	1323	3273	2654	1690	4733	3831	2435
	cod.	0182115669			0182205669			0182345669			0182225669			0182335669		
2600	outp	2081	1695	1091	2028	1651	1061	2867	2330	1495	3700	3000	1910	5351	4330	2752
	cod.	0182115678			0182205678			0182345678			0182225678			0182335678		
3000	outp	2401	1956	1259	2340	1905	1224	3307	2689	1725	4269	3461	2204	6174	4997	3176
	cod.	0182115690			0182205690			0182345690			0182225690			0182335690		

H 600 - I1 50 / I2 540		11			20			21			22			33		
Depth (mm)		64			67			67			101			158		
Exponent (n)		1,268			1,248			1,277			1,298			1,307		
Length (mm)		Output Δt 50°C 75/65-20 W	Output Δt 42,5°C 70/55-20 W	Output Δt 30°C 55/45-20 W	Output Δt 50°C 75/65-20 W	Output Δt 42,5°C 70/55-20 W	Output Δt 30°C 55/45-20 W	Output Δt 50°C 75/65-20 W	Output Δt 42,5°C 70/55-20 W	Output Δt 30°C 55/45-20 W	Output Δt 50°C 75/65-20 W	Output Δt 42,5°C 70/55-20 W	Output Δt 30°C 55/45-20 W	Output Δt 50°C 75/65-20 W	Output Δt 42,5°C 70/55-20 W	Output Δt 30°C 55/45-20 W
400	outp	371	302	194	364	297	192	509	414	265	659	534	340	949	766	486
	cod.	0182116612			0182206612			0182346612			0182226612			0182336612		
500	outp	464	378	243	455	372	241	636	517	331	824	668	425	1186	957	607
	cod.	0182116615			0182206615			0182346615			0182226615			0182336615		
600	outp	557	454	291	546	446	289	765	621	398	988	801	510	1423	1149	729
	cod.	0182116618			0182206618			0182346618			0182226618			0182336618		
700	outp	650	529	340	637	520	337	892	725	464	1153	935	595	1660	1340	850
	cod.	0182116621			0182206621			0182346621			0182226621			0182336621		
800	outp	743	605	389	728	594	385	1019	828	531	1318	1068	680	1898	1532	972
	cod.	0182116624			0182206624			0182346624			0182226624			0182336624		
900	outp	836	680	437	819	669	433	1146	931	597	1482	1202	765	2135	1723	1093
	cod.	0182116627			0182206627			0182346627			0182226627			0182336627		
1000	outp	929	756	486	910	743	481	1253	1018	653	1647	1335	849	2372	1915	1216
	cod.	0182116630			0182206630			0182346630			0182226630			0182336630		
1100	outp	1021	832	534	1001	817	529	1401	1138	730	1812	1469	935	2609	2106	1336
	cod.	0182116633			0182206633			0182346633			0182226633			0182336633		
1200	outp	1114	907	583	1092	892	577	1528	1242	796	1976	1603	1020	2846	2298	1457
	cod.	0182116636			0182206636			0182346636			0182226636			0182336636		
1400	outp	1300	1058	680	1274	1040	673	1783	1448	928	2306	1870	1190	3321	2681	1700
	cod.	0182116642			0182206642			0182346642			0182226642			0182336642		
1600	outp	1486	1210	777	1456	1189	770	2038	1656	1062	2635	2137	1360	3795	3064	1943
	cod.	0182116648			0182206648			0182346648			0182226648			0182336648		
1800	outp	1671	1361	874	1638	1337	866	2293	1863	1194	2965	2404	1530	4270	3447	2186
	cod.	0182116654			0182206654			0182346654			0182226654			0182336654		
2000	outp	1857	1512	971	1820	1486	962	2547	2070	1327	3294	2671	1700	4744	3830	2429
	cod.	0182116660			0182206660			0182346660			0182226660			0182336660		
2300	outp	2136	1739	1117	2093	1709	1106	2929	2380	1525	3788	3072	1954	5456	4404	2793
	cod.	0182116669			0182206669			0182346669			0182226669			0182336669		
2600	outp	2414	1966	1263	2366	1932	1251	3312	2691	1725	4109	3533	3318	6167	4978	3158
	cod.	0182116678			0182206678			0182346678			0182226678			0182336678		
3000	outp	2786	2268	1457	2730	2229	1443	3821	3105	1990	4941	4006	2549	7116	5744	3644
	cod.	0182116690			0182206690			0182346690			0182226690			0182336690		

For coloured versions, please contact RADIATORS customer service

LINEAR V6 L

H 700 - l1 50 / l2 640		11			20			21			22			33		
Depth (mm)		64			67			67			101			158		
Exponent (n)		1,277			1,250			1,286			1,309			1,316		
Length (mm)		Output Δt 50°C 75/65-20 W	Output Δt 42,5°C 70/55-20 W	Output Δt 30°C 55/45-20 W	Output Δt 50°C 75/65-20 W	Output Δt 42,5°C 70/55-20 W	Output Δt 30°C 55/45-20 W	Output Δt 50°C 75/65-20 W	Output Δt 42,5°C 70/55-20 W	Output Δt 30°C 55/45-20 W	Output Δt 50°C 75/65-20 W	Output Δt 42,5°C 70/55-20 W	Output Δt 30°C 55/45-20 W	Output Δt 50°C 75/65-20 W	Output Δt 42,5°C 70/55-20 W	Output Δt 30°C 55/45-20 W
400	outp	423	343	220	416	340	220	576	467	298	747	605	383	1074	867	548
	cod.	0182117612			0182207612			0182347612			0182227612			0182337612		
500	outp	528	429	275	520	425	275	720	584	372	934	756	479	1343	1084	685
	cod.	0182117615			0182207615			0182347615			0182227615			0182337615		
600	outp	634	515	330	624	509	329	863	701	446	1121	907	575	1611	1301	823
	cod.	0182117618			0182207618			0182347618			0182227618			0182337618		
700	outp	739	601	385	728	594	384	1007	818	521	1308	1058	671	1880	1518	960
	cod.	0182117621			0182207621			0182347621			0182227621			0182337621		
800	outp	845	686	440	832	679	439	1151	934	595	1494	1210	767	2148	1734	1097
	cod.	0182117624			0182207624			0182347624			0182227624			0182337624		
900	outp	951	772	495	936	764	494	1295	1051	670	1681	1361	863	2417	1951	1234
	cod.	0182117627			0182207627			0182347627			0182227627			0182337627		
1000	outp	1056	858	550	1040	849	549	1413	1147	733	1868	1512	957	2685	2168	1371
	cod.	0182117630			0182207630			0182347630			0182227630			0182337630		
1100	outp	1162	944	605	1144	934	604	1583	1285	818	2055	1663	1054	2954	2385	1508
	cod.	0182117633			0182207633			0182347633			0182227633			0182337633		
1200	outp	1268	1030	660	1248	1019	659	1727	1402	893	2242	1814	1150	3222	2602	1645
	cod.	0182117636			0182207636			0182347636			0182227636			0182337636		
1400	outp	1479	1201	770	1456	1189	769	2015	1635	1042	2615	2117	1342	3759	3035	1919
	cod.	0182117642			0182207642			0182347642			0182227642			0182337642		
1600	outp	1690	1373	880	1664	1358	878	2302	1869	1190	2989	2419	1534	4296	3469	2193
	cod.	0182117648			0182207648			0182347648			0182227648			0182337648		
1800	outp	1902	1544	990	1872	1528	988	2590	2102	1339	3362	2722	1725	4833	3902	2468
	cod.	0182117654			0182207654			0182347654			0182227654			0182337654		
2000	outp	2113	1716	1100	2080	1698	1098	2878	2336	1488	3736	3024	1917	5370	4336	2742
	cod.	0182117660			0182207660			0182347660			0182227660			0182337660		
2300	outp	2430	1973	1265	2392	1953	1263	3310	2686	1711	4296	3478	2204	6176	4986	3153
	cod.	0182117669			0182207669			0182347669			0182227669			0182337669		
2600	outp	2747	2231	1430	2704	2207	1427	3741	3037	1934	4857	3931	2492	6981	5637	3564
	cod.	0182117678			0182207678			0182347678			0182227678			0182337678		
3000	outp	3169	2574	1650	3120	2547	1647	4317	3504	2232	5604	4536	2875	8055	6504	4113
	cod.	0182117690			0182207690			0182347690			0182227690			0182337690		

H 900 - l1 50 / l2 840		11			20			21			22			33		
Depth (mm)		64			67			67			101			158		
Exponent (n)		1,296			1,257			1,305			1,331			1,333		
Length (mm)		Output Δt 50°C 75/65-20 W	Output Δt 42,5°C 70/55-20 W	Output Δt 30°C 55/45-20 W	Output Δt 50°C 75/65-20 W	Output Δt 42,5°C 70/55-20 W	Output Δt 30°C 55/45-20 W	Output Δt 50°C 75/65-20 W	Output Δt 42,5°C 70/55-20 W	Output Δt 30°C 55/45-20 W	Output Δt 50°C 75/65-20 W	Output Δt 42,5°C 70/55-20 W	Output Δt 30°C 55/45-20 W	Output Δt 50°C 75/65-20 W	Output Δt 42,5°C 70/55-20 W	Output Δt 30°C 55/45-20 W
400	outp	526	426	271	521	424	274	703	569	361	922	744	468	1327	1068	672
	cod.	0182119612			0182209612			0182349612			0182229612			0182339612		
500	outp	658	533	339	652	531	343	879	711	451	1153	930	585	1659	1335	839
	cod.	0182119615			0182209615			0182349615			0182229615			0182339615		
600	outp	789	640	407	782	637	411	1055	853	542	1384	1116	702	1991	1602	1007
	cod.	0182119618			0182209618			0182349618			0182229618			0182339618		
700	outp	921	746	475	912	743	480	1231	996	632	1614	1302	819	2323	1870	1175
	cod.	0182119621			0182209621			0182349621			0182229621			0182339621		
800	outp	1052	853	543	1042	849	548	1407	1138	722	1845	1488	936	2654	2137	1343
	cod.	0182119624			0182209624			0182349624			0182229624			0182339624		
900	outp	1184	959	611	1173	955	617	1582	1280	812	2075	1675	1053	2986	2404	1511
	cod.	0182119627			0182209627			0182349627			0182229627			0182339627		
1000	outp	1315	1066	678	1303	1061	685	1728	1398	887	2306	1861	1169	3318	2671	1679
	cod.	0182119630			0182209630			0182349630			0182229630			0182339630		
1100	outp	1447	1173	746	1433	1167	754	1934	1565	993	2537	2047	1287	3650	2938	1847
	cod.	0182119633			0182209633			0182349633			0182229633			0182339633		
1200	outp	1578	1279	814	1564	1273	822	2109	1706	1083	2767	2233	1404	3982	3205	2015
	cod.	0182119636			0182209636			0182349636			0182229636			0182339636		
1400	outp	1842	1492	950	1824	1485	959	2462	1991	1264	3228	2605	1638	4645	3739	2350
	cod.	0182119642			0182209642			0182349642			0182229642			0182339642		
1600	outp	2105	1706	1085	2085	1698	1096	2813	2275	1444	3690	2977	1873	5309	4273	2686
	cod.	0182119648			0182209648			0182349648			0182229648			0182339648		
1800	outp	2368	1919	1221	2345	1910	1233	3165	2560	1625	4151	3349	2107	5972	4807	3022
	cod.	0182119654			0182209654			0182349654			0182229654			0182339654		
2000	outp	2631	2132	1357	2606	2122	1370	3516	2844	1805	4612	3721	2341	6636	5342	3358
	cod.	0182119660			0182209660			0182349660			0182229660			0182339660		
2300	outp	3025	2452	1560	2997	2440	1576	4043	3271	2076	5304	4279	2692	7631	6143	3861
	cod.	0182119669			0182209669			0182349669			0182229669			0182339669		
2600	outp	3420	2772	1764	3388	2759	1781	4571	3697	2347	5996	4838	3043	8627	6944	4365
	cod.	0182119678			0182209678			0182349678			0182229678			0182339678		
3000	outp	3946	3198	2035	3909	3183	2055	5274	4266	2708	6918	5582	3511	9954	8012	5036
	cod.	0182119690			0182209690			0182349690			0182229690			0182339690		

For coloured versions, please contact RADIATORS customer service

Note

LINEAR V6 C

Image for illustrative purposes only

Technical specifications
Material: UNI EN 10130:2007 steel
Channel pitch 33.33 mm
Connection thread 1/2" G - 3/4" G
Working pressure 10 bar
Test pressure 13 bar
Max. operating temperature 110°C
3-phase painting process:
- hot pretreatment and phosphatisation
- electrophoretic dip base coat
- epoxy powder finish coat

Standard connections and accessories
Linear with central connection is delivered with:
- top grille
- screw-on side panels for greater safety
- 4 x 1/2" side connections
- 2 x 3/4" central bottom connections, external thread, 50 mm pipe centre
- 3 x 1/2" blind plugs
- 1 x 1/2" vent plug

The product comes with pre-installed plastic covers that must be removed before installation and, if necessary, replaced with caps that can be purchased separately.

Fixing kit not supplied.

Thermostatic insert and thermostatic head can be ordered separately.

LINEAR V6 C

Front view

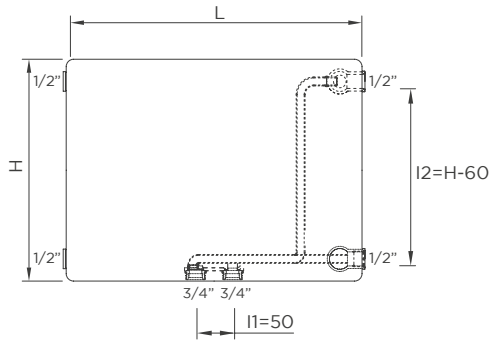

Configurations

In Out

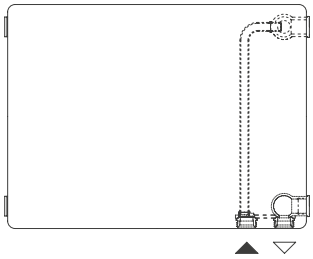

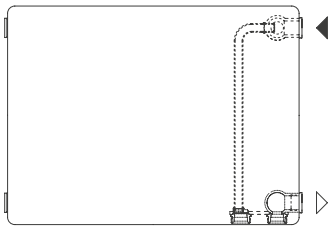

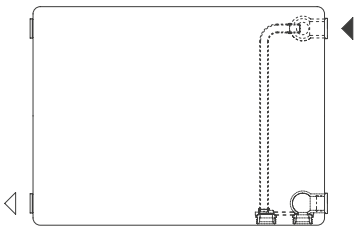

Rear view mod. 11

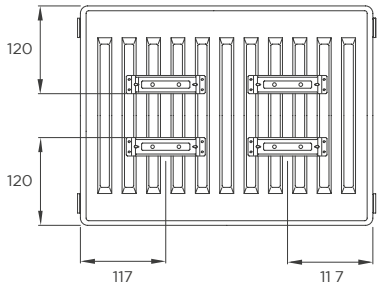

Top view

11

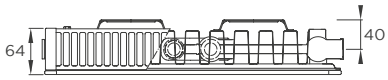

21

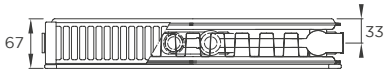

22

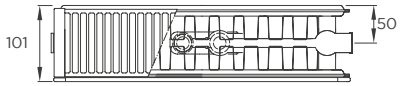

33

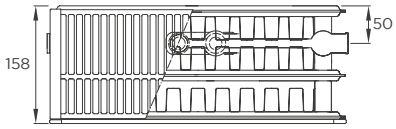

Dimensions are in millimeters (mm)

LINEAR V6 C

H 300 - I1 50 / I2 240		11			21			22			33		
Depth (mm)		64			67			101			158		
Exponent (n)		1,254			1,269			1,292			1,288		
Length (mm)		Output Δt 50°C 75/65-20 W	Output Δt 42,5°C 70/55-20 W	Output Δt 30°C 55/45-20 W	Output Δt 50°C 75/65-20 W	Output Δt 42,5°C 70/55-20 W	Output Δt 30°C 55/45-20 W	Output Δt 50°C 75/65-20 W	Output Δt 42,5°C 70/55-20 W	Output Δt 30°C 55/45-20 W	Output Δt 50°C 75/65-20 W	Output Δt 42,5°C 70/55-20 W	Output Δt 30°C 55/45-20 W
400	outp	215	176	113	295	240	154	383	310	198	565	458	293
	cod.	0H20113012			0H20653512			0H20223512			0H20333512		
500	outp	269	220	142	369	300	193	479	388	247	707	572	366
	cod.	0H20113015			0H20653515			0H20223515			0H20333515		
600	outp	323	263	170	442	359	231	574	465	296	848	687	439
	cod.	0H20113018			0H20653518			0H20223518			0H20333518		
700	outp	377	307	198	516	420	270	670	543	346	989	801	512
	cod.	0H20113021			0H20653521			0H20223521			0H20333521		
800	outp	430	351	227	589	480	308	766	620	395	1130	916	586
	cod.	0H20113024			0H20653524			0H20223524			0H20333524		
900	outp	484	395	255	664	540	347	861	698	445	1272	1030	659
	cod.	0H20113027			0H20653527			0H20223527			0H20333527		
1000	outp	538	439	283	722	588	378	957	775	494	1413	1145	732
	cod.	0H20113030			0H20653530			0H20223530			0H20333530		
1100	outp	592	483	312	810	659	424	1053	853	543	1554	1259	805
	cod.	0H20113033			0H20653533			0H20223533			0H20333533		
1200	outp	646	527	340	885	720	463	1148	930	593	1696	1373	878
	cod.	0H20113036			0H20653536			0H20223536			0H20333536		
1400	outp	753	615	397	1032	840	540	1340	1085	692	1978	1602	1025
	cod.	0H20113042			0H20653542			0H20223542			0H20333542		
1600	outp	861	702	453	1179	959	617	1531	1241	790	2261	1831	1171
	cod.	0H20113048			0H20653548			0H20223548			0H20333548		
1800	outp	968	790	510	1326	1079	694	1723	1396	889	2543	2060	1318
	cod.	0H20113054			0H20653554			0H20223554			0H20333554		
2000	outp	1076	878	567	1474	1199	771	1914	1551	988	2826	2289	1464
	cod.	0H20113060			0H20653560			0H20223560			0H20333560		
2300	outp	1237	1010	652	1695	1379	887	2201	1783	1136	3250	2633	1684
	cod.	0H20113069			0H20653569			0H20223569			0H20333569		
2600	outp	1399	1141	737	1916	1559	1002	2488	2016	1284	3674	2976	1903
	cod.	0H20113078			0H20653578			0H20223578			0H20333578		
3000	outp	1614	1317	850	2211	1799	1157	2871	2326	1482	4239	3434	2196
	cod.	0H20113090			0H20653590			0H20223590			0H20333590		

H 400 - I1 50 / I2 340		11			21			22			33		
Depth (mm)		64			67			101			158		
Exponent (n)		1,259			1,271			1,294			1,295		
Length (mm)		Output Δt 50°C 75/65-20 W	Output Δt 42,5°C 70/55-20 W	Output Δt 30°C 55/45-20 W	Output Δt 50°C 75/65-20 W	Output Δt 42,5°C 70/55-20 W	Output Δt 30°C 55/45-20 W	Output Δt 50°C 75/65-20 W	Output Δt 42,5°C 70/55-20 W	Output Δt 30°C 55/45-20 W	Output Δt 50°C 75/65-20 W	Output Δt 42,5°C 70/55-20 W	Output Δt 30°C 55/45-20 W
400	outp	268	219	141	370	301	193	478	387	247	696	565	360
	cod.	0H20114012			0H20654512			0H20224512			0H20334512		
500	outp	335	274	176	462	376	241	597	484	309	871	706	450
	cod.	0H20114015			0H20654515			0H20224515			0H20334515		
600	outp	403	328	212	555	451	290	716	581	370	1045	847	540
	cod.	0H20114018			0H20654518			0H20224518			0H20334518		
700	outp	470	383	247	647	527	338	836	678	432	1219	988	630
	cod.	0H20114021			0H20654521			0H20224521			0H20334521		
800	outp	537	438	282	739	601	386	955	774	494	1393	1130	719
	cod.	0H20114024			0H20654524			0H20224524			0H20334524		
900	outp	604	492	317	832	676	434	1075	871	555	1567	1271	809
	cod.	0H20114027			0H20654527			0H20224527			0H20334527		
1000	outp	671	547	353	908	738	474	1194	968	617	1741	1412	898
	cod.	0H20114030			0H20654530			0H20224530			0H20334530		
1100	outp	738	602	388	1017	827	531	1313	1065	679	1915	1553	989
	cod.	0H20114033			0H20654533			0H20224533			0H20334533		
1200	outp	805	656	423	1110	902	580	1433	1161	740	2089	1694	1079
	cod.	0H20114036			0H20654536			0H20224536			0H20334536		
1400	outp	939	766	494	1294	1052	676	1672	1355	864	2437	1977	1259
	cod.	0H20114042			0H20654542			0H20224542			0H20334542		
1600	outp	1073	875	564	1479	1203	773	1910	1549	987	2786	2259	1439
	cod.	0H20114048			0H20654548			0H20224548			0H20334548		
1800	outp	1208	985	635	1663	1353	869	2149	1742	1111	3134	2541	1619
	cod.	0H20114054			0H20654554			0H20224554			0H20334554		
2000	outp	1342	1094	705	1849	1504	966	2388	1936	1234	3482	2824	1799
	cod.	0H20114060			0H20654560			0H20224560			0H20334560		
2300	outp	1543	1258	811	2126	1729	1110	2746	2226	1419	4004	3247	2068
	cod.	0H20114069			0H20654569			0H20224569			0H20334569		
2600	outp	1744	1422	917	2403	1955	1255	3104	2517	1604	4527	3671	2338
	cod.	0H20114078			0H20654578			0H20224578			0H20334578		
3000	outp	2013	1641	1058	2773	2255	1448	3582	2904	1851	5223	4236	2698
	cod.	0H20114090			0H20654590			0H20224590			0H20334590		

For coloured versions, please contact RADIATORS customer service

LINEAR V6 C

H 500 - I1 50 / I2 440		11			21			22			33		
Depth (mm)		64			67			101			158		
Exponent (n)		1,263			1,274			1,296			1,301		
Length (mm)		Output Δt 50°C 75/65-20 W	Output Δt 42,5°C 70/55-20 W	Output Δt 30°C 55/45-20 W	Output Δt 50°C 75/65-20 W	Output Δt 42,5°C 70/55-20 W	Output Δt 30°C 55/45-20 W	Output Δt 50°C 75/65-20 W	Output Δt 42,5°C 70/55-20 W	Output Δt 30°C 55/45-20 W	Output Δt 50°C 75/65-20 W	Output Δt 42,5°C 70/55-20 W	Output Δt 30°C 55/45-20 W
400	outp	320	261	168	441	358	230	569	462	294	823	666	423
	cod.	0H20115012			0H20655512			0H20225512			0H20335512		
500	outp	400	326	210	552	449	288	712	577	367	1029	833	529
	cod.	0H20115015			0H20655515			0H20225515			0H20335515		
600	outp	480	391	252	662	538	345	854	692	441	1235	999	635
	cod.	0H20115018			0H20655518			0H20225518			0H20335518		
700	outp	560	456	294	772	627	402	996	808	514	1441	1166	741
	cod.	0H20115021			0H20655521			0H20225521			0H20335521		
800	outp	640	522	336	882	717	460	1138	923	588	1646	1332	847
	cod.	0H20115024			0H20655524			0H20225524			0H20335524		
900	outp	720	587	378	993	807	518	1281	1038	661	1852	1499	953
	cod.	0H20115027			0H20655527			0H20225527			0H20335527		
1000	outp	800	652	420	1083	880	565	1423	1154	734	2058	1666	1059
	cod.	0H20115030			0H20655530			0H20225530			0H20335530		
1100	outp	880	717	462	1212	986	632	1565	1269	808	2264	1832	1165
	cod.	0H20115033			0H20655533			0H20225533			0H20335533		
1200	outp	960	782	504	1323	1076	690	1708	1385	882	2470	1999	1270
	cod.	0H20115036			0H20655536			0H20225536			0H20335536		
1400	outp	1120	913	588	1543	1255	805	1992	1615	1028	2881	2332	1482
	cod.	0H20115042			0H20655542			0H20225542			0H20335542		
1600	outp	1280	1043	672	1764	1434	920	2277	1846	1175	3293	2665	1694
	cod.	0H20115048			0H20655548			0H20225548			0H20335548		
1800	outp	1441	1174	755	1984	1613	1035	2561	2077	1322	3704	2998	1906
	cod.	0H20115054			0H20655554			0H20225554			0H20335554		
2000	outp	1601	1304	839	2205	1793	1150	2846	2308	1469	3704	2998	1906
	cod.	0H20115060			0H20655560			0H20225560			0H20335560		
2300	outp	1841	1500	965	2536	2062	1323	3273	2654	1690	4733	3831	2435
	cod.	0H20115069			0H20655569			0H20225569			0H20335569		
2600	outp	2081	1695	1091	2867	2330	1495	3700	3000	1910	5351	4330	2752
	cod.	0H20115078			0H20655578			0H20225578			0H20335578		
3000	outp	2401	1956	1259	3307	2689	1725	4269	3461	2204	6174	4997	3176
	cod.	0H20115090			0H20655590			0H20225590			0H20335590		

H 600 - I1 50 / I2 540		11			21			22			33		
Depth (mm)		64			67			101			158		
Exponent (n)		1,268			1,277			1,298			1,307		
Length (mm)		Output Δt 50°C 75/65-20 W	Output Δt 42,5°C 70/55-20 W	Output Δt 30°C 55/45-20 W	Output Δt 50°C 75/65-20 W	Output Δt 42,5°C 70/55-20 W	Output Δt 30°C 55/45-20 W	Output Δt 50°C 75/65-20 W	Output Δt 42,5°C 70/55-20 W	Output Δt 30°C 55/45-20 W	Output Δt 50°C 75/65-20 W	Output Δt 42,5°C 70/55-20 W	Output Δt 30°C 55/45-20 W
400	outp	371	302	194	509	414	265	659	534	340	949	766	486
	cod.	0H20116012			0H20656512			0H20226512			0H20336512		
500	outp	464	378	243	636	517	331	824	668	425	1186	957	607
	cod.	0H20116015			0H20656515			0H20226515			0H20336515		
600	outp	557	454	291	765	621	398	988	801	510	1423	1149	729
	cod.	0H20116018			0H20656518			0H20226518			0H20336518		
700	outp	650	529	340	892	725	464	1153	935	595	1660	1340	850
	cod.	0H20116021			0H20656521			0H20226521			0H20336521		
800	outp	743	605	389	1019	828	531	1318	1068	680	1898	1532	972
	cod.	0H20116024			0H20656524			0H20226524			0H20336524		
900	outp	836	680	437	1146	931	597	1482	1202	765	2135	1723	1093
	cod.	0H20116027			0H20656527			0H20226527			0H20336527		
1000	outp	929	756	486	1253	1018	653	1647	1335	849	2372	1915	1216
	cod.	0H20116030			0H20656530			0H20226530			0H20336530		
1100	outp	1021	832	534	1401	1138	730	1812	1469	935	2609	2106	1336
	cod.	0H20116033			0H20656533			0H20226533			0H20336533		
1200	outp	1114	907	583	1528	1242	796	1976	1603	1020	2846	2298	1457
	cod.	0H20116036			0H20656536			0H20226536			0H20336536		
1400	outp	1300	1058	680	1783	1448	928	2306	1870	1190	3321	2681	1700
	cod.	0H20116042			0H20656542			0H20226542			0H20336542		
1600	outp	1486	1210	777	2038	1656	1062	2635	2137	1360	3795	3064	1943
	cod.	0H20116048			0H20656548			0H20226548			0H20336548		
1800	outp	1671	1361	874	2293	1863	1194	2965	2404	1530	4270	3447	2186
	cod.	0H20116054			0H20656554			0H20226554			0H20336554		
2000	outp	1857	1512	971	2547	2070	1327	3294	2671	1700	4744	3830	2429
	cod.	0H20116060			0H20656560			0H20226560			0H20336560		
2300	outp	2136	1739	1117	2929	2380	1525	3788	3072	1954	5456	4404	2793
	cod.	0H20116069			0H20656569			0H20226569			0H20336569		
2600	outp	2414	1966	1263	3312	2691	1725	4282	3472	2209	6167	4978	3158
	cod.	0H20116078			0H20656578			0H20226578			0H20336578		
3000	outp	2786	2268	1457	3821	3105	1990	4941	4006	2549	7116	5744	3644
	cod.	0H20116090			0H20656590			0H20226590			0H20336590		

For coloured versions, please contact RADIATORS customer service

LINEAR V6 C

H 700 - I1 50 / I2 640		11			21			22			33		
Depth (mm)		64			67			101			158		
Exponent (n)		1,277			1,286			1,309			1,316		
Length (mm)		Output Δt 50°C 75/65-20 W	Output Δt 42,5°C 70/55-20 W	Output Δt 30°C 55/45-20 W	Output Δt 50°C 75/65-20 W	Output Δt 42,5°C 70/55-20 W	Output Δt 30°C 55/45-20 W	Output Δt 50°C 75/65-20 W	Output Δt 42,5°C 70/55-20 W	Output Δt 30°C 55/45-20 W	Output Δt 50°C 75/65-20 W	Output Δt 42,5°C 70/55-20 W	Output Δt 30°C 55/45-20 W
400	outp	423	343	220	576	467	298	747	605	383	1074	867	548
	cod.	0H20117012			0H20657512			0H20227512			0H20337512		
500	outp	528	429	275	720	584	372	934	756	479	1343	1084	685
	cod.	0H20117015			0H20657515			0H20227515			0H20337515		
600	outp	634	515	330	863	701	446	1121	907	575	1611	1301	823
	cod.	0H20117018			0H20657518			0H20227518			0H20337518		
700	outp	739	601	385	1007	818	521	1308	1058	671	1880	1518	960
	cod.	0H20117021			0H20657521			0H20227521			0H20337521		
800	outp	845	686	440	1151	934	595	1494	1210	767	2148	1734	1097
	cod.	0H20117024			0H20657524			0H20227524			0H20337524		
900	outp	951	772	495	1295	1051	670	1681	1361	863	2417	1951	1234
	cod.	0H20117027			0H20657527			0H20227527			0H20337527		
1000	outp	1056	858	550	1413	1147	733	1868	1512	957	2685	2168	1371
	cod.	0H20117030			0H20657530			0H20227530			0H20337530		
1100	outp	1162	944	605	1583	1285	818	2055	1663	1054	2954	2385	1508
	cod.	0H20117033			0H20657533			0H20227533			0H20337533		
1200	outp	1268	1030	660	1727	1402	893	2242	1814	1150	3222	2602	1645
	cod.	0H20117036			0H20657536			0H20227536			0H20337536		
1400	outp	1479	1201	770	2015	1635	1042	2615	2117	1342	3759	3035	1919
	cod.	0H20117042			0H20657542			0H20227542			0H20337542		
1600	outp	1690	1373	880	2302	1869	1190	2989	2419	1534	4296	3469	2193
	cod.	0H20117048			0H20657548			0H20227548			0H20337548		
1800	outp	1902	1544	990	2590	2102	1339	3362	2722	1725	4833	3902	2468
	cod.	0H20117054			0H20657554			0H20227554			0H20337554		
2000	outp	2113	1716	1100	2878	2336	1488	3736	3024	1917	5370	4336	2742
	cod.	0H20117060			0H20657560			0H20227560			0H20337560		
2300	outp	2430	1973	1265	3310	2686	1711	4296	3478	2204	6176	4986	3153
	cod.	0H20117069			0H20657569			0H20227569			0H20337569		
2600	outp	2747	2231	1430	3741	3037	1934	4857	3931	2492	6981	5637	3564
	cod.	0H20117078			0H20657578			0H20227578			0H20337578		
3000	outp	3169	2574	1650	4317	3504	2232	5604	4536	2875	8055	6504	4113
	cod.	0H20117090			0H20657590			0H20227590			0H20337590		

H 900 - I1 50 / I2 840		11			21			22			33		
Depth (mm)		64			67			101			158		
Exponent (n)		1,296			1,305			1,331			1,333		
Length (mm)		Output Δt 50°C 75/65-20 W	Output Δt 42,5°C 70/55-20 W	Output Δt 30°C 55/45-20 W	Output Δt 50°C 75/65-20 W	Output Δt 42,5°C 70/55-20 W	Output Δt 30°C 55/45-20 W	Output Δt 50°C 75/65-20 W	Output Δt 42,5°C 70/55-20 W	Output Δt 30°C 55/45-20 W	Output Δt 50°C 75/65-20 W	Output Δt 42,5°C 70/55-20 W	Output Δt 30°C 55/45-20 W
400	outp	526	426	271	703	569	361	922	744	468	1327	1068	672
	cod.	0H20119012			0H20659512			0H20229512			0H20339512		
500	outp	658	533	339	879	711	451	1153	930	585	1659	1335	839
	cod.	0H20119015			0H20659515			0H20229515			0H20339515		
600	outp	789	640	407	1055	853	542	1384	1116	702	1991	1602	1007
	cod.	0H20119018			0H20659518			0H20229518			0H20339518		
700	outp	921	746	475	1231	996	632	1614	1302	819	2323	1870	1175
	cod.	0H20119021			0H20659521			0H20229521			0H20339521		
800	outp	1052	853	543	1407	1138	722	1845	1488	936	2654	2137	1343
	cod.	0H20119024			0H20659524			0H20229524			0H20339524		
900	outp	1184	959	611	1582	1280	812	2075	1675	1053	2986	2404	1511
	cod.	0H20119027			0H20659527			0H20229527			0H20339527		
1000	outp	1315	1066	678	1728	1398	887	2306	1861	1169	3318	2671	1679
	cod.	0H20119030			0H20659530			0H20229530			0H20339530		
1100	outp	1447	1173	746	1934	1565	993	2537	2047	1287	3650	2938	1847
	cod.	0H20119033			0H20659533			0H20229533			0H20339533		
1200	outp	1578	1279	814	2109	1706	1083	2767	2233	1404	3982	3205	2015
	cod.	0H20119036			0H20659536			0H20229536			0H20339536		
1400	outp	1842	1492	950	2462	1991	1264	3228	2605	1638	4645	3739	2350
	cod.	0H20119042			0H20659542			0H20229542			0H20339542		
1600	outp	2105	1706	1085	2813	2275	1444	3690	2977	1873	5309	4273	2686
	cod.	0H20119048			0H20659548			0H20229548			0H20339548		
1800	outp	2368	1919	1221	3165	2560	1625	4151	3349	2107	5972	4807	3022
	cod.	0H20119054			0H20659554			0H20229554			0H20339554		
2000	outp	2631	2132	1357	3516	2844	1805	4612	3721	2341	6636	5342	3358
	cod.	0H20119060			0H20659560			0H20229560			0H20339560		
2300	outp	3025	2452	1560	4043	3271	2076	5304	4279	2692	7631	6143	3861
	cod.	0H20119069			0H20659569			0H20229569			0H20339569		
2600	outp	3420	2772	1764	4571	3697	2347	5996	4838	3043	8627	6944	4365
	cod.	0H20119078			0H20659578			0H20229578			0H20339578		
3000	outp	3946	3198	2035	5274	4266	2708	6918	5582	3511	9954	8012	5036
	cod.	0H20119090			0H20659590			0H20229590			0H20339590		

For coloured versions, please contact RADIATORS customer service

Note

LINEAR C4 Hygiene

Image for illustrative purposes only

Technical specifications
Material: UNI EN 10130:2007 steel
Channel pitch 33.33 mm
Connection thread 1/2" G
Working pressure 10 bar
Test pressure 13 bar
Max. operating temperature 110°C
3-phase painting process:
- hot pretreatment and phosphatisation
- electrophoretic dip base coat
- epoxy powder finish coat

Standard connections and accessories
Linear C4 Hygiene is delivered with:
- 4 x 1/2" connections

The product is supplied with pre-assembled plastic lids that must be removed before installation and replaced with the supplied caps.

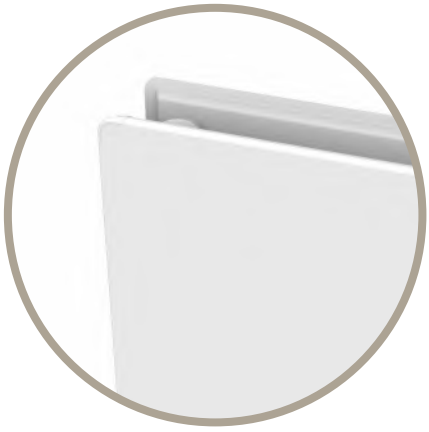

LINEAR C4 Hygiene

Front view

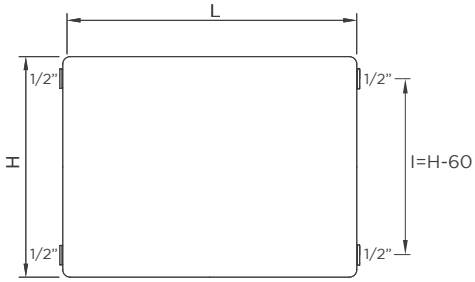

Rear view mod. 20 - 30

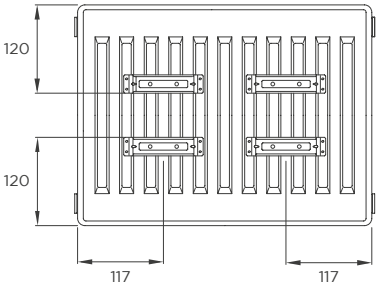

Top view

10

20

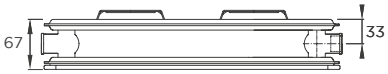

30

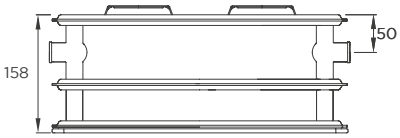

Configurations

In Out

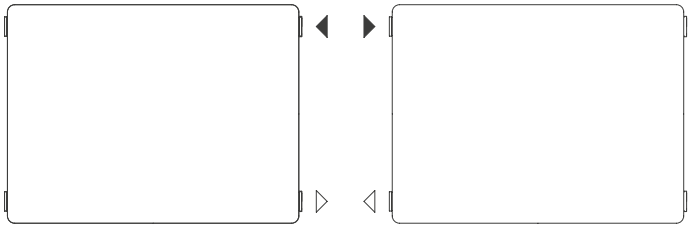

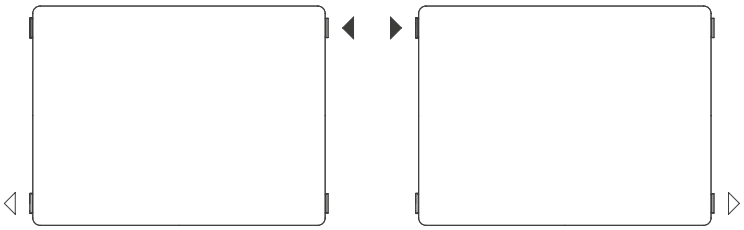

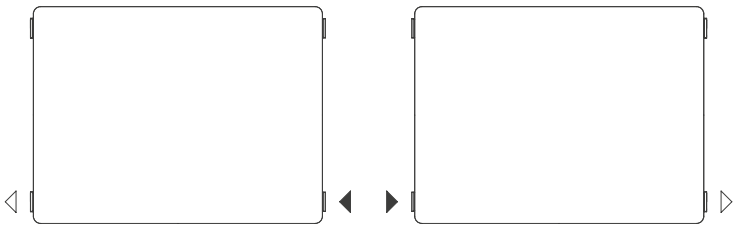

Dimensions are in millimeters (mm)

LINEAR C4 Hygiene

H 300 - l 240		10			20			30		
Depth (mm)		63			66			157		
Exponent (n)		1,279			1,310			1,279		
Length (mm)		Output Δt 50°C 75/65-20 W	Output Δt 42,5°C 70/55-20 W	Output Δt 30°C 55/45-20 W	Output Δt 50°C 75/65-20 W	Output Δt 42,5°C 70/55-20 W	Output Δt 30°C 55/45-20 W	Output Δt 50°C 75/65-20 W	Output Δt 42,5°C 70/55-20 W	Output Δt 30°C 55/45-20 W
400	outp	117	95	61	206	166	106	312	253	162
	cod.	0182103012			0H21203012			0H21303012		
500	outp	146	119	76	258	208	132	391	316	203
	cod.	0182103015			0H21203015			0H21303015		
600	outp	175	142	91	309	250	158	469	379	244
	cod.	0182103018			0H21203018			0H21303018		
700	outp	204	166	106	361	291	185	547	443	284
	cod.	0182103021			0H21203021			0H21303021		
800	outp	234	190	122	412	333	211	625	506	325
	cod.	0182103024			0H21203024			0H21303024		
900	outp	263	213	137	464	374	238	703	569	365
	cod.	0182103027			0H21203027			0H21303027		
1000	outp	292	237	152	515	416	264	780	632	406
	cod.	0182103030			0H21203030			0H21303030		
1100	outp	321	261	167	567	458	290	859	696	447
	cod.	0182103033			0H21203033			0H21303033		
1200	outp	350	284	182	618	499	317	937	759	487
	cod.	0182103036			0H21203036			0H21303036		
1400	outp	409	332	213	721	582	370	1093	885	568
	cod.	0182103042			0H21203042			0H21303042		
1600	outp	467	379	243	824	666	422	1250	1012	650
	cod.	0182103048			0H21203048			0H21303048		
1800	outp	526	427	274	927	749	475	1406	1138	731
	cod.	0182103054			0H21203054			0H21303054		
2000	outp	584	474	304	1030	832	528	1562	1265	812
	cod.	0182103060			0H21203060			0H21303060		
2300	outp	672	545	350	1185	957	607	1796	1455	934
	cod.	0182103069			0H21203069			0H21303069		
2600	outp	759	616	395	1339	1082	686	2031	1644	1056
	cod.	0182103078			0H21203078			0H21303078		
3000	outp	876	711	456	1545	1248	792	2343	1897	1218
	cod.	0182103090			0H21203090			0H21303090		

H 400 - l 340		10			20			30		
Depth (mm)		63			66			157		
Exponent (n)		1,281			1,289			1,280		
Length (mm)		Output Δt 50°C 75/65-20 W	Output Δt 42,5°C 70/55-20 W	Output Δt 30°C 55/45-20 W	Output Δt 50°C 75/65-20 W	Output Δt 42,5°C 70/55-20 W	Output Δt 30°C 55/45-20 W	Output Δt 50°C 75/65-20 W	Output Δt 42,5°C 70/55-20 W	Output Δt 30°C 55/45-20 W
400	outp	142	116	74	260	211	134	390	317	203
	cod.	0182104012			0H21204012			0H21304012		
500	outp	178	145	93	325	264	168	488	396	254
	cod.	0182104015			0H21204015			0H21304015		
600	outp	214	173	111	389	316	202	585	475	304
	cod.	0182104018			0H21204018			0H21304018		
700	outp	249	202	130	454	369	235	683	554	355
	cod.	0182104021			0H21204021			0H21304021		
800	outp	285	231	148	519	422	269	780	633	406
	cod.	0182104024			0H21204024			0H21304024		
900	outp	320	260	167	584	474	302	878	713	456
	cod.	0182104027			0H21204027			0H21304027		
1000	outp	356	289	185	649	527	336	975	792	507
	cod.	0182104030			0H21204030			0H21304030		
1100	outp	392	318	204	714	580	370	1073	871	558
	cod.	0182104033			0H21204033			0H21304033		
1200	outp	427	347	222	779	632	403	1170	950	608
	cod.	0182104036			0H21204036			0H21304036		
1400	outp	498	405	259	909	738	470	1365	1109	710
	cod.	0182104042			0H21204042			0H21304042		
1600	outp	570	462	296	1038	843	538	1560	1267	811
	cod.	0182104048			0H21204048			0H21304048		
1800	outp	641	520	333	1168	949	605	1755	1425	913
	cod.	0182104054			0H21204054			0H21304054		
2000	outp	712	578	370	1298	1054	672	1950	1584	1014
	cod.	0182104060			0H21204060			0H21304060		
2300	outp	819	665	426	1493	1212	773	2243	1821	1166
	cod.	0182104069			0H21204069			0H21304069		
2600	outp	926	751	481	1687	1370	874	2535	2059	1318
	cod.	0182104078			0H21204078			0H21304078		
3000	outp	1068	867	555	1947	1581	1008	2925	2376	1521
	cod.	0182104090			0H21204090			0H21304090		

For coloured versions, please contact RADIATORS customer service.

LINEAR C4 Hygiene

H 500 - 1 440		10			20			30		
Depth (mm)		63			66			157		
Exponent (n)		1,281			1,268			1,281		
Length (mm)		Output Δt 50°C 75/65-20 W	Output Δt 42,5°C 70/55-20 W	Output Δt 30°C 55/45-20 W	Output Δt 50°C 75/65-20 W	Output Δt 42,5°C 70/55-20 W	Output Δt 30°C 55/45-20 W	Output Δt 50°C 75/65-20 W	Output Δt 42,5°C 70/55-20 W	Output Δt 30°C 55/45-20 W
400	outp	170	138	88	312	254	163	466	379	243
	cod.	0182105012			0H21205012			0H21305012		
500	outp	213	173	111	390	318	204	583	474	303
	cod.	0182105015			0H21205015			0H21305015		
600	outp	256	208	133	468	381	245	699	569	364
	cod.	0182105018			0H21205018			0H21305018		
700	outp	298	242	155	546	445	286	816	664	425
	cod.	0182105021			0H21205021			0H21305021		
800	outp	341	277	177	624	508	326	932	758	485
	cod.	0182105024			0H21205024			0H21305024		
900	outp	383	311	199	702	572	367	1049	853	546
	cod.	0182105027			0H21205027			0H21305027		
1000	outp	426	346	221	780	635	408	1165	948	606
	cod.	0182105030			0H21205030			0H21305030		
1100	outp	469	381	243	858	699	449	1282	1043	667
	cod.	0182105033			0H21205033			0H21305033		
1200	outp	511	415	265	936	762	490	1398	1138	728
	cod.	0182105036			0H21205036			0H21305036		
1400	outp	596	484	309	1092	889	571	1631	1327	849
	cod.	0182105042			0H21205042			0H21305042		
1600	outp	682	554	354	1248	1016	653	1864	1517	971
	cod.	0182105048			0H21205048			0H21305048		
1800	outp	767	623	398	1404	1143	734	2097	1706	1092
	cod.	0182105054			0H21205054			0H21305054		
2000	outp	852	692	442	1560	1270	816	2330	1896	1213
	cod.	0182105060			0H21205060			0H21305060		
2300	outp	980	796	508	1794	1461	938	2680	2180	1396
	cod.	0182105069			0H21205069			0H21305069		
2600	outp	1108	900	575	2028	1651	1061	3029	2465	1578
	cod.	0182105078			0H21205078			0H21305078		
3000	outp	1278	1038	663	2340	1905	1224	3495	2844	1820
	cod.	0182105090			0H21205090			0H21305090		

H 600 - 1 540		10			20			30		
Depth (mm)		63			66			157		
Exponent (n)		1,282			1,248			1,281		
Length (mm)		Output Δt 50°C 75/65-20 W	Output Δt 42,5°C 70/55-20 W	Output Δt 30°C 55/45-20 W	Output Δt 50°C 75/65-20 W	Output Δt 42,5°C 70/55-20 W	Output Δt 30°C 55/45-20 W	Output Δt 50°C 75/65-20 W	Output Δt 42,5°C 70/55-20 W	Output Δt 30°C 55/45-20 W
400	outp	201	163	104	364	297	192	541	439	281
	cod.	0182106012			0H21206012			0H21306012		
500	outp	252	204	131	455	372	241	677	549	352
	cod.	0182106015			0H21206015			0H21306015		
600	outp	302	245	157	546	446	289	812	659	422
	cod.	0182106018			0H21206018			0H21306018		
700	outp	352	286	183	637	520	337	947	769	492
	cod.	0182106021			0H21206021			0H21306021		
800	outp	402	326	209	728	594	385	1083	879	562
	cod.	0182106024			0H21206024			0H21306024		
900	outp	453	367	235	819	669	433	1218	989	633
	cod.	0182106027			0H21206027			0H21306027		
1000	outp	503	408	261	910	743	481	1353	1098	703
	cod.	0182106030			0H21206030			0H21306030		
1100	outp	553	449	287	1001	817	529	1489	1208	773
	cod.	0182106033			0H21206033			0H21306033		
1200	outp	604	490	313	1092	892	577	1624	1318	844
	cod.	0182106036			0H21206036			0H21306036		
1400	outp	704	571	365	1274	1040	673	1895	1538	984
	cod.	0182106042			0H21206042			0H21306042		
1600	outp	805	653	418	1456	1189	770	2165	1758	1125
	cod.	0182106048			0H21206048			0H21306048		
1800	outp	905	734	470	1638	1337	866	2436	1977	1266
	cod.	0182106054			0H21206054			0H21306054		
2000	outp	1006	816	522	1820	1486	962	2707	2197	1406
	cod.	0182106060			0H21206060			0H21306060		
2300	outp	1157	938	600	2093	1709	1106	3113	2526	1617
	cod.	0182106069			0H21206069			0H21306069		
2600	outp	1308	1061	679	2366	1932	1251	3519	2856	1828
	cod.	0182106078			0H21206078			0H21306078		
3000	outp	1509	1224	783	2730	2229	1443	4060	3295	2109
	cod.	0182106090			0H21206090			0H21306090		

For coloured versions, please contact RADIATORS customer service.

LINEAR C4 Hygiene

H 700 - I 640		10			20			30		
Depth (mm)		63			66			157		
Exponent (n)		1,263			1,250			1,281		
Length (mm)		Output Δt 50°C 75/65-20 W	Output Δt 42,5°C 70/55-20 W	Output Δt 30°C 55/45-20 W	Output Δt 50°C 75/65-20 W	Output Δt 42,5°C 70/55-20 W	Output Δt 30°C 55/45-20 W	Output Δt 50°C 75/65-20 W	Output Δt 42,5°C 70/55-20 W	Output Δt 30°C 55/45-20 W
400	outp	236	192	124	416	340	220	616	499	319
	cod.	0182107012			0H21207012			0H21307012		
500	outp	295	240	155	520	425	275	771	624	399
	cod.	0182107015			0H21207015			0H21307015		
600	outp	353	288	185	624	509	329	925	749	479
	cod.	0182107018			0H21207018			0H21307018		
700	outp	412	336	216	728	594	384	1079	874	558
	cod.	0182107021			0H21207021			0H21307021		
800	outp	471	384	247	832	679	439	1233	999	638
	cod.	0182107024			0H21207024			0H21307024		
900	outp	530	432	278	936	764	494	1387	1124	718
	cod.	0182107027			0H21207027			0H21307027		
1000	outp	589	480	309	1040	849	549	1541	1249	799
	cod.	0182107030			0H21207030			0H21307030		
1100	outp	648	528	340	1144	934	604	1695	1374	878
	cod.	0182107033			0H21207033			0H21307033		
1200	outp	707	576	371	1248	1019	659	1849	1498	957
	cod.	0182107036			0H21207036			0H21307036		
1400	outp	825	672	433	1456	1189	769	2157	1748	1117
	cod.	0182107042			0H21207042			0H21307042		
1600	outp	942	768	494	1664	1358	878	2466	1998	1277
	cod.	0182107048			0H21207048			0H21307048		
1800	outp	1060	864	556	1872	1528	988	2774	2248	1436
	cod.	0182107054			0H21207054			0H21307054		
2000	outp	1178	960	618	2080	1698	1098	3082	2497	1596
	cod.	0182107060			0H21207060			0H21307060		
2300	outp	1355	1104	711	2392	1953	1263	3544	2872	1835
	cod.	0182107069			0H21207069			0H21307069		
2600	outp	1531	1248	803	2704	2207	1427	4007	3247	2074
	cod.	0182107078			0H21207078			0H21307078		
3000	outp	1767	1440	927	3120	2547	1647	4623	3746	2394
	cod.	0182107090			0H21207090			0H21307090		

H 900 - I 840		10			20			30		
Depth (mm)		63			66			157		
Exponent (n)		1,226			1,257			1,297		
Length (mm)		Output Δt 50°C 75/65-20 W	Output Δt 42,5°C 70/55-20 W	Output Δt 30°C 55/45-20 W	Output Δt 50°C 75/65-20 W	Output Δt 42,5°C 70/55-20 W	Output Δt 30°C 55/45-20 W	Output Δt 50°C 75/65-20 W	Output Δt 42,5°C 70/55-20 W	Output Δt 30°C 55/45-20 W
400	outp	318	261	170	521	424	274	768	623	396
	cod.	0182109012			0H21209012			0H21309012		
500	outp	398	326	213	652	531	343	960	778	495
	cod.	0182109015			0H21209015			0H21309015		
600	outp	478	391	256	782	637	411	1152	934	594
	cod.	0182109018			0H21209018			0H21309018		
700	outp	557	456	298	912	743	480	1344	1090	693
	cod.	0182109021			0H21209021			0H21309021		
800	outp	637	522	341	1042	849	548	1536	1245	793
	cod.	0182109024			0H21209024			0H21309024		
900	outp	716	587	383	1173	955	617	1728	1401	892
	cod.	0182109027			0H21209027			0H21309027		
1000	outp	796	652	426	1303	1061	685	1920	1556	990
	cod.	0182109030			0H21209030			0H21309030		
1100	outp	876	717	469	1433	1167	754	2112	1712	1090
	cod.	0182109033			0H21209033			0H21309033		
1200	outp	955	782	511	1564	1273	822	2304	1868	1189
	cod.	0182109036			0H21209036			0H21309036		
1400	outp	1114	913	596	1824	1485	959	2688	2179	1387
	cod.	0182109042			0H21209042			0H21309042		
1600	outp	1274	1043	682	2085	1698	1096	3072	2490	1585
	cod.	0182109048			0H21209048			0H21309048		
1800	outp	1433	1174	767	2345	1910	1233	3455	2802	1783
	cod.	0182109054			0H21209054			0H21309054		
2000	outp	1592	1304	852	2606	2122	1370	3839	3113	1981
	cod.	0182109060			0H21209060			0H21309060		
2300	outp	1831	1500	980	2997	2440	1576	4415	3580	2279
	cod.	0182109069			0H21209069			0H21309069		
2600	outp	2070	1695	1108	3388	2759	1781	4991	4047	2576
	cod.	0182109078			0H21209078			0H21309078		
3000	outp	2388	1956	1278	3909	3183	2055	5759	4669	2972
	cod.	0182109090			0H21209090			0H21309090		

For coloured versions, please contact RADIATORS customer service.

Note

LINEAR V6 Hygiene

Image for illustrative purposes only

Technical specifications
Material: UNI EN 10130:2007 steel
Channel pitch 33.33 mm
Connection thread 1/2" G
Working pressure 10 bar
Test pressure 13 bar
Max. operating temperature 110°C
3-phase painting process:
- hot pretreatment and phosphatisation
- electrophoretic dip base coat
- epoxy powder finish coat

Standard connections and accessories
Linear V6 Hygiene with right side connection is delivered with:
- 4 x 1/2" connections
- 2 x 3/4" bottom connections, external thread, 50 mm pipe centre
- 1 x installation kit including:
- 3 x 1/2" blind plugs
- 1 x 1/2" vent plug

The product is supplied with pre-assembled plastic lids that must be removed before installation and replaced with the supplied caps.

Fixing kit not supplied.

Thermostatic insert and thermostatic head can be ordered separately.

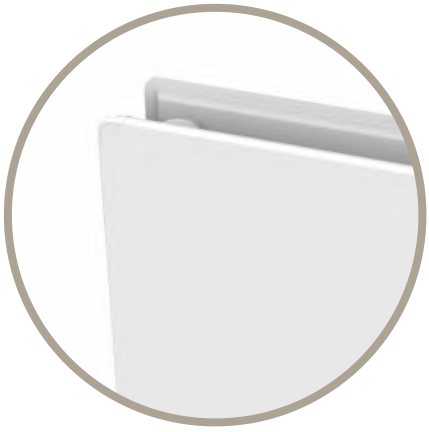

LINEAR V6 Hygiene

Front view

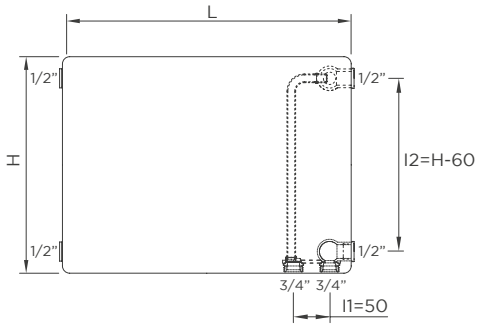

Configurations

In Out

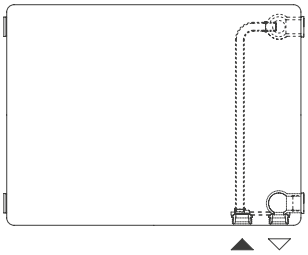

Rear view mod. 20 - 30

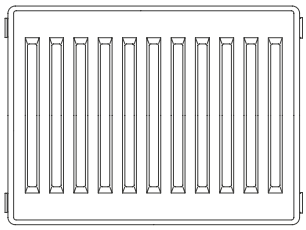

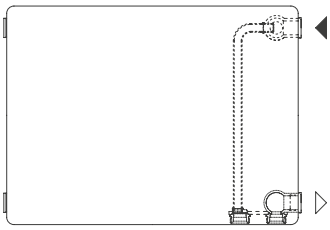

Top view

10

20

30

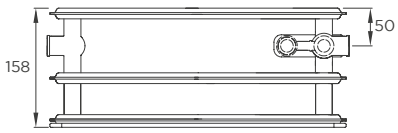

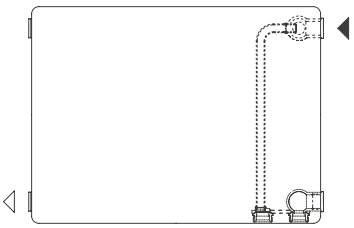

Dimensions are in millimeters (mm)

LINEAR V6 Hygiene

H 300 - I1 50 / I2 240		10			20			30		
Depth (mm)		64			67			158		
Exponent (n)		1,280			1,310			1,279		
Length (mm)		Output Δt 50°C 75/65-20 W	Output Δt 42,5°C 70/55-20 W	Output Δt 30°C 55/45-20 W	Output Δt 50°C 75/65-20 W	Output Δt 42,5°C 70/55-20 W	Output Δt 30°C 55/45-20 W	Output Δt 50°C 75/65-20 W	Output Δt 42,5°C 70/55-20 W	Output Δt 30°C 55/45-20 W
400	outp	117	95	61	206	166	106	312	253	162
	cod.	0182103612			0H21203212			0H21303212		
500	outp	146	119	76	258	208	132	391	316	203
	cod.	0182103615			0H21203215			0H21303215		
600	outp	175	142	91	309	250	158	469	379	244
	cod.	0182103618			0H21203218			0H21303218		
700	outp	204	166	106	361	291	185	547	443	284
	cod.	0182103621			0H21203221			0H21303221		
800	outp	234	190	122	412	333	211	625	506	325
	cod.	0182103624			0H21203224			0H21303224		
900	outp	263	213	137	464	374	238	703	569	365
	cod.	0182103627			0H21203227			0H21303227		
1000	outp	292	237	152	515	416	264	780	632	406
	cod.	0182103630			0H21203230			0H21303230		
1100	outp	321	261	167	567	458	290	859	696	447
	cod.	0182103633			0H21203233			0H21303233		
1200	outp	350	284	182	618	499	317	937	759	487
	cod.	0182103636			0H21203236			0H21303236		
1400	outp	409	332	213	721	582	370	1093	885	568
	cod.	0182103642			0H21203242			0H21303242		
1600	outp	467	379	243	824	666	422	1250	1012	650
	cod.	0182103648			0H21203248			0H21303248		
1800	outp	526	427	274	927	749	475	1406	1138	731
	cod.	0182103654			0H21203254			0H21303254		
2000	outp	584	474	304	1030	832	528	1562	1265	812
	cod.	0182103660			0H21203260			0H21303260		
2300	outp	672	545	350	1185	957	607	1796	1455	934
	cod.	0182103669			0H21203269			0H21303269		
2600	outp	759	616	395	1339	1082	686	2031	1644	1056
	cod.	0182103678			0H21203278			0H21303278		
3000	outp	876	711	456	1545	1248	792	2343	1897	1218
	cod.	0182103690			0H21203290			0H21303290		

H 400 - I1 50 / I2 340		10			20			30		
Depth (mm)		64			67			158		
Exponent (n)		1,281			1,289			1,280		
Length (mm)		Output Δt 50°C 75/65-20 W	Output Δt 42,5°C 70/55-20 W	Output Δt 30°C 55/45-20 W	Output Δt 50°C 75/65-20 W	Output Δt 42,5°C 70/55-20 W	Output Δt 30°C 55/45-20 W	Output Δt 50°C 75/65-20 W	Output Δt 42,5°C 70/55-20 W	Output Δt 30°C 55/45-20 W
400	outp	142	116	74	260	211	134	390	317	203
	cod.	0182104612			0H21204212			0H21304212		
500	outp	178	145	93	325	264	168	488	396	254
	cod.	0182104615			0H21204215			0H21304215		
600	outp	214	173	111	389	316	202	585	475	304
	cod.	0182104618			0H21204218			0H21304218		
700	outp	249	202	130	454	369	235	683	554	355
	cod.	0182104621			0H21204221			0H21304221		
800	outp	285	231	148	519	422	269	780	633	406
	cod.	0182104624			0H21204224			0H21304224		
900	outp	320	260	167	584	474	302	878	713	456
	cod.	0182104627			0H21204227			0H21304227		
1000	outp	356	289	185	649	527	336	975	792	507
	cod.	0182104630			0H21204230			0H21304230		
1100	outp	392	318	204	714	580	370	1073	871	558
	cod.	0182104633			0H21204233			0H21304233		
1200	outp	427	347	222	779	632	403	1170	950	608
	cod.	0182104636			0H21204236			0H21304236		
1400	outp	498	405	259	909	738	470	1365	1109	710
	cod.	0182104642			0H21204242			0H21304242		
1600	outp	570	462	296	1038	843	538	1560	1267	811
	cod.	0182104648			0H21204248			0H21304248		
1800	outp	641	520	333	1168	949	605	1755	1425	913
	cod.	0182104654			0H21204254			0H21304254		
2000	outp	712	578	370	1298	1054	672	1950	1584	1014
	cod.	0182104660			0H21204260			0H21304260		
2300	outp	819	665	426	1493	1212	773	2243	1821	1166
	cod.	0182104669			0H21204269			0H21304269		
2600	outp	926	751	481	1687	1370	874	2535	2059	1318
	cod.	0182104678			0H21204278			0H21304278		
3000	outp	1068	867	555	1947	1581	1008	2925	2376	1521
	cod.	0182104690			0H21204290			0H21304290		

For coloured versions, please contact RADIATORS customer service.

LINEAR V6 Hygiene

H 500 - l1 50 / l2 440		10			20			30		
Depth (mm)		64			67			158		
Exponent (n)		1,281			1,268			1,281		
Length (mm)		Output Δt 50°C 75/65-20 W	Output Δt 42,5°C 70/55-20 W	Output Δt 30°C 55/45-20 W	Output Δt 50°C 75/65-20 W	Output Δt 42,5°C 70/55-20 W	Output Δt 30°C 55/45-20 W	Output Δt 50°C 75/65-20 W	Output Δt 42,5°C 70/55-20 W	Output Δt 30°C 55/45-20 W
400	outp	170	138	88	312	254	163	466	379	243
	cod.	0182105612			0H21205212			0H21305212		
500	outp	213	173	111	390	318	204	583	474	303
	cod.	0182105615			0H21205215			0H21305215		
600	outp	256	208	133	468	381	245	699	569	364
	cod.	0182105618			0H21205218			0H21305218		
700	outp	298	242	155	546	445	286	816	664	425
	cod.	0182105621			0H21205221			0H21305221		
800	outp	341	277	177	624	508	326	932	758	485
	cod.	0182105624			0H21205224			0H21305224		
900	outp	383	311	199	702	572	367	1049	853	546
	cod.	0182105627			0H21205227			0H21305227		
1000	outp	426	346	221	780	635	408	1165	948	606
	cod.	0182105630			0H21205230			0H21305230		
1100	outp	469	381	243	858	699	449	1282	1043	667
	cod.	0182105633			0H21205233			0H21305233		
1200	outp	511	415	265	936	762	490	1398	1138	728
	cod.	0182105636			0H21205236			0H21305236		
1400	outp	596	484	309	1092	889	571	1631	1327	849
	cod.	0182105642			0H21205242			0H21305242		
1600	outp	682	554	354	1248	1016	653	1864	1517	971
	cod.	0182105648			0H21205248			0H21305248		
1800	outp	767	623	398	1404	1143	734	2097	1706	1092
	cod.	0182105654			0H21205254			0H21305254		
2000	outp	852	692	442	1560	1270	816	2330	1896	1213
	cod.	0182105660			0H21205260			0H21305260		
2300	outp	980	796	508	1794	1461	938	2680	2180	1396
	cod.	0182105669			0H21205269			0H21305269		
2600	outp	1108	900	575	2028	1651	1061	3029	2465	1578
	cod.	0182105678			0H21205278			0H21305278		
3000	outp	1278	1038	663	2340	1905	1224	3495	2844	1820
	cod.	0182105690			0H21205290			0H21305290		

H 600 - l1 50 / l2 540		10			20			30		
Depth (mm)		64			67			158		
Exponent (n)		1,282			1,248			1,281		
Length (mm)		Output Δt 50°C 75/65-20 W	Output Δt 42,5°C 70/55-20 W	Output Δt 30°C 55/45-20 W	Output Δt 50°C 75/65-20 W	Output Δt 42,5°C 70/55-20 W	Output Δt 30°C 55/45-20 W	Output Δt 50°C 75/65-20 W	Output Δt 42,5°C 70/55-20 W	Output Δt 30°C 55/45-20 W
400	outp	201	163	104	364	297	192	541	439	281
	cod.	0182106612			0H21206212			0H21306212		
500	outp	252	204	131	455	372	241	677	549	352
	cod.	0182106615			0H21206215			0H21306215		
600	outp	302	245	157	546	446	289	812	659	422
	cod.	0182106618			0H21206218			0H21306218		
700	outp	352	286	183	637	520	337	947	769	492
	cod.	0182106621			0H21206221			0H21306221		
800	outp	402	326	209	728	594	385	1083	879	562
	cod.	0182106624			0H21206224			0H21306224		
900	outp	453	367	235	819	669	433	1218	989	633
	cod.	0182106627			0H21206227			0H21306227		
1000	outp	503	408	261	910	743	481	1353	1098	703
	cod.	0182106630			0H21206230			0H21306230		
1100	outp	553	449	287	1001	817	529	1489	1208	773
	cod.	0182106633			0H21206233			0H21306233		
1200	outp	604	490	313	1092	892	577	1624	1318	844
	cod.	0182106636			0H21206236			0H21306236		
1400	outp	704	571	365	1274	1040	673	1895	1538	984
	cod.	0182106642			0H21206242			0H21306242		
1600	outp	805	653	418	1456	1189	770	2165	1758	1125
	cod.	0182106648			0H21206248			0H21306248		
1800	outp	905	734	470	1638	1337	866	2436	1977	1266
	cod.	0182106654			0H21206254			0H21306254		
2000	outp	1006	816	522	1820	1486	962	2707	2197	1406
	cod.	0182106660			0H21206260			0H21306260		
2300	outp	1157	938	600	2093	1709	1106	3113	2526	1617
	cod.	0182106669			0H21206269			0H21306269		
2600	outp	1308	1061	679	2366	1932	1251	3519	2856	1828
	cod.	0182106678			0H21206278			0H21306278		
3000	outp	1509	1224	783	2730	2229	1443	4060	3295	2109
	cod.	0182106690			0H21206290			0H21306290		

For coloured versions, please contact RADIATORS customer service.

LINEAR V6 Hygiene

H 700 - I1 50 / I2 640		10			20			30		
Depth (mm)		64			67			158		
Exponent (n)		1,263			1,250			1,286		
Length (mm)		Output Δt 50°C 75/65-20 W	Output Δt 42,5°C 70/55-20 W	Output Δt 30°C 55/45-20 W	Output Δt 50°C 75/65-20 W	Output Δt 42,5°C 70/55-20 W	Output Δt 30°C 55/45-20 W	Output Δt 50°C 75/65-20 W	Output Δt 42,5°C 70/55-20 W	Output Δt 30°C 55/45-20 W
400	outp	236	192	124	416	340	220	616	499	319
	cod.	0182107612			0H21207212			0H21307212		
500	outp	295	240	155	520	425	275	771	624	399
	cod.	0182107615			0H21207215			0H21307215		
600	outp	353	288	185	624	509	329	925	749	479
	cod.	0182107618			0H21207218			0H21307218		
700	outp	412	336	216	728	594	384	1079	874	558
	cod.	0182107621			0H21207221			0H21307221		
800	outp	471	384	247	832	679	439	1233	999	638
	cod.	0182107624			0H21207224			0H21307224		
900	outp	530	432	278	936	764	494	1387	1124	718
	cod.	0182107627			0H21207227			0H21307227		
1000	outp	589	480	309	1040	849	549	1541	1249	799
	cod.	0182107630			0H21207230			0H21307230		
1100	outp	648	528	340	1144	934	604	1695	1374	878
	cod.	0182107633			0H21207233			0H21307233		
1200	outp	707	576	371	1248	1019	659	1849	1498	957
	cod.	0182107636			0H21207236			0H21307236		
1400	outp	825	672	433	1456	1189	769	2157	1748	1117
	cod.	0182107642			0H21207242			0H21307242		
1600	outp	942	768	494	1664	1358	878	2466	1998	1277
	cod.	0182107648			0H21207248			0H21307248		
1800	outp	1060	864	556	1872	1528	988	2774	2248	1436
	cod.	0182107654			0H21207254			0H21307254		
2000	outp	1178	960	618	2080	1698	1098	3082	2497	1596
	cod.	0182107660			0H21207260			0H21307260		
2300	outp	1355	1104	711	2392	1953	1263	3544	2872	1835
	cod.	0182107669			0H21207269			0H21307269		
2600	outp	1531	1248	803	2704	2207	1427	4007	3247	2074
	cod.	0182107678			0H21207278			0H21307278		
3000	outp	1767	1440	927	3120	2547	1647	4623	3746	2394
	cod.	0182107690			0H21207290			0H21307290		

H 900 - I1 50 / I2 840		10			20			30		
Depth (mm)		64			67			158		
Exponent (n)		1,226			1,257			1,297		
Length (mm)		Output Δt 50°C 75/65-20 W	Output Δt 42,5°C 70/55-20 W	Output Δt 30°C 55/45-20 W	Output Δt 50°C 75/65-20 W	Output Δt 42,5°C 70/55-20 W	Output Δt 30°C 55/45-20 W	Output Δt 50°C 75/65-20 W	Output Δt 42,5°C 70/55-20 W	Output Δt 30°C 55/45-20 W
400	outp	318	261	170	521	424	274	768	623	396
	cod.	0182109612			0H21209212			0H21309212		
500	outp	398	326	213	652	531	343	960	778	495
	cod.	0182109615			0H21209215			0H21309215		
600	outp	478	391	256	782	637	411	1152	934	594
	cod.	0182109618			0H21209218			0H21309218		
700	outp	557	456	298	912	743	480	1344	1090	693
	cod.	0182109621			0H21209221			0H21309221		
800	outp	637	522	341	1042	849	548	1536	1245	793
	cod.	0182109624			0H21209224			0H21309224		
900	outp	716	587	383	1173	955	617	1728	1401	892
	cod.	0182109627			0H21209227			0H21309227		
1000	outp	796	652	426	1303	1061	685	1920	1556	990
	cod.	0182109630			0H21209230			0H21309230		
1100	outp	876	717	469	1433	1167	754	2112	1712	1090
	cod.	0182109633			0H21209233			0H21309233		
1200	outp	955	782	511	1564	1273	822	2304	1868	1189
	cod.	0182109636			0H21209236			0H21309236		
1400	outp	1114	913	596	1824	1485	959	2688	2179	1387
	cod.	0182109642			0H21209242			0H21309242		
1600	outp	1274	1043	682	2085	1698	1096	3072	2490	1585
	cod.	0182109648			0H21209248			0H21309248		
1800	outp	1433	1174	767	2345	1910	1233	3455	2802	1783
	cod.	0182109654			0H21209254			0H21309254		
2000	outp	1592	1304	852	2606	2122	1370	3839	3113	1981
	cod.	0182109660			0H21209260			0H21309260		
2300	outp	1831	1500	980	2997	2440	1576	4415	3580	2279
	cod.	0182109669			0H21209269			0H21309269		
2600	outp	2070	1695	1108	3388	2759	1781	4991	4047	2576
	cod.	0182109678			0H21209278			0H21309278		
3000	outp	2388	1956	1278	3909	3183	2055	5759	4669	2972
	cod.	0182109690			0H21209290			0H21309290		

For coloured versions, please contact RADIATORS customer service.

Note

LINEAR C6 Vertical

Image for illustrative purposes only

Technical specifications
Material: UNI EN 10130:2007 steel
Channel pitch 33.33 mm
Connection thread 1/2" G
Working pressure 10 bar
Test pressure 13 bar
Max. operating temperature 110°C
3-phase painting process:
- hot pretreatment and phosphatisation
- electrophoretic dip base coat
- epoxy powder finish coat

Standard connections and accessories
Linear C6 Vertical is delivered with:
- top grille
- screw-on side panels for greater safety
- 2 x 1/2" bottom connections, internal thread, 50 mm pipe centre
- 4 x 1/2" connections, internal thread

The product is supplied with pre-assembled plastic lids that must be removed before installation and replaced with the supplied caps.

Installation kit including:
- GB brackets
- 3 x 1/2" blind plugs
- 1 x 1/2" vent plug

LINEAR C6 Vertical

Front view

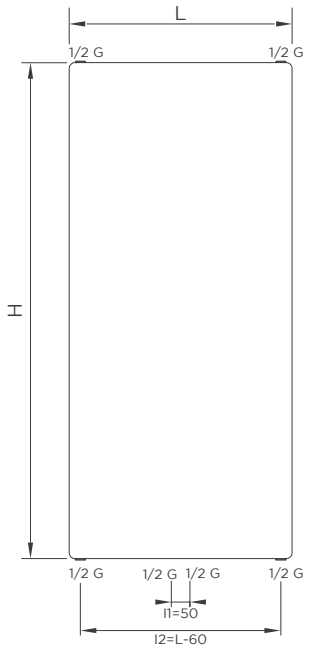

Top view

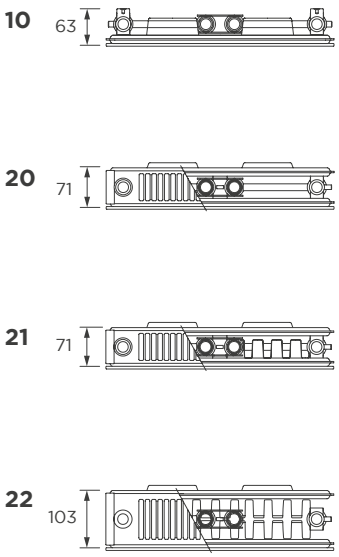

Configurations

In Out

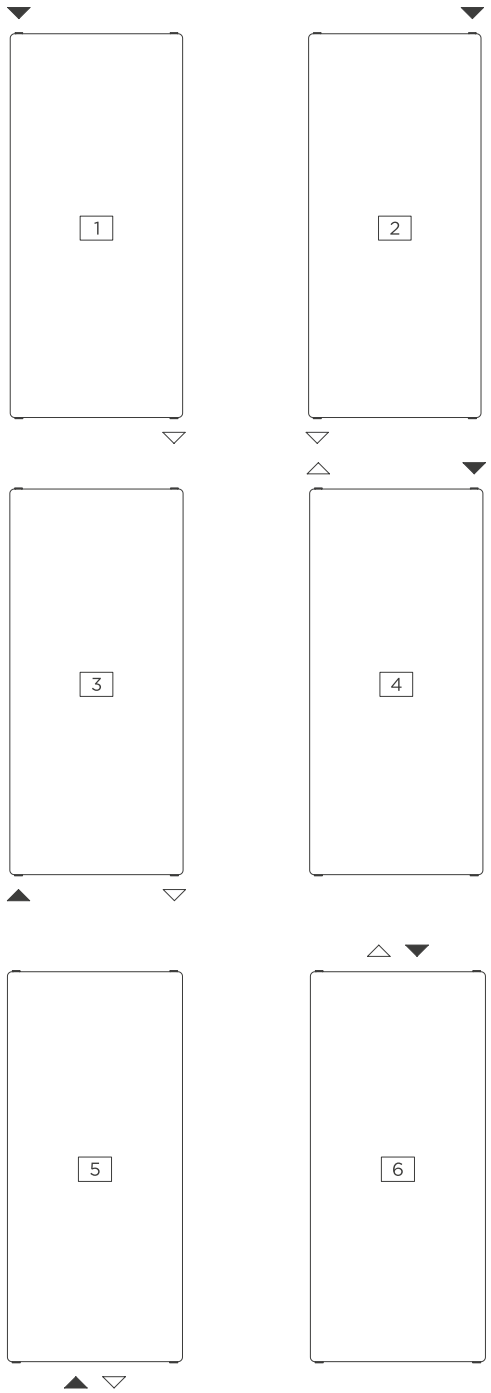

For connection method:
1-2-3-5 standard configurations
4-6 before ordering, see configuration notes page 157

Dimensions are in millimeters (mm)

LINEAR C6 Vertical

H 1400			10			20			21			22		
Depth (mm)			63			71			71			103		
Exponent (n)			1,234			1,263			1,298			1,354		
Length (mm)	Pipe center (mm)		Output Δt 50°C 75/65-20 W	Output Δt 42,5°C 70/55-20 W	Output Δt 30°C 55/45-20 W	Output Δt 50°C 75/65-20 W	Output Δt 42,5°C 70/55-20 W	Output Δt 30°C 55/45-20 W	Output Δt 50°C 75/65-20 W	Output Δt 42,5°C 70/55-20 W	Output Δt 30°C 55/45-20 W	Output Δt 50°C 75/65-20 W	Output Δt 42,5°C 70/55-20 W	Output Δt 30°C 55/45-20 W
300	240	outp	381	312	203	576	469	302	738	598	380	953	765	477
		cod.	0146103842			0146203842			0146213842			0146223842		
400	340	outp	508	416	270	768	625	403	984	797	507	1271	1020	636
		cod.	0146104842			0146204842			0146214842			0146224842		
500	440	outp	635	520	338	960	782	503	1230	996	634	1588	1274	795
		cod.	0146105842			0146205842			0146215842			0146225842		
600	540	outp	762	623	406	1152	938	604	1476	1195	761	1906	1529	954
		cod.	0146106842			0146206842			0146216842			0146226842		
700	640	outp	889	727	473	1344	1094	705	1722	1395	887	2223	1784	1113
		cod.	0146107842			0146207842			0146217842			0146227842		
900	840	outp	1143	935	608	1728	1407	906	2215	1793	1141	2859	2294	1431
		cod.	0146109842			0146209842			0146219842			0146229842		

H 1600			10			20			21			22		
Depth (mm)			63			71			71			103		
Exponent (n)			1,288			1,276			1,318			1,355		
Length (mm)	Pipe center (mm)		Output Δt 50°C 75/65-20 W	Output Δt 42,5°C 70/55-20 W	Output Δt 30°C 55/45-20 W	Output Δt 50°C 75/65-20 W	Output Δt 42,5°C 70/55-20 W	Output Δt 30°C 55/45-20 W	Output Δt 50°C 75/65-20 W	Output Δt 42,5°C 70/55-20 W	Output Δt 30°C 55/45-20 W	Output Δt 50°C 75/65-20 W	Output Δt 42,5°C 70/55-20 W	Output Δt 30°C 55/45-20 W
300	240	outp	416	337	215	648	527	338	809	653	413	1053	845	527
		cod.	0146103848			0146203848			0146213848			0146223848		
400	340	outp	554	449	287	864	702	450	1079	871	550	1404	1126	702
		cod.	0146104848			0146204848			0146214848			0146224848		
500	440	outp	693	562	359	1081	878	563	1349	1089	688	1755	1408	878
		cod.	0146105848			0146205848			0146215848			0146225848		
600	540	outp	831	674	430	1297	1054	675	1619	1307	826	2105	1689	1054
		cod.	0146106848			0146206848			0146216848			0146226848		
700	640	outp	970	786	502	1513	1229	788	1888	1524	963	2456	1971	1229
		cod.	0146107848			0146207848			0146217848			0146227848		
900	840	outp	1247	1011	645	1945	1584	1013	2428	1960	1239	3158	2534	1581
		cod.	0146109848			0146209848			0146219848			0146229848		

H 1800			10			20			21			22		
Depth (mm)			63			71			71			103		
Exponent (n)			1,343			1,290			1,337			1,355		
Length (mm)	Pipe center (mm)		Output Δt 50°C 75/65-20 W	Output Δt 42,5°C 70/55-20 W	Output Δt 30°C 55/45-20 W	Output Δt 50°C 75/65-20 W	Output Δt 42,5°C 70/55-20 W	Output Δt 30°C 55/45-20 W	Output Δt 50°C 75/65-20 W	Output Δt 42,5°C 70/55-20 W	Output Δt 30°C 55/45-20 W	Output Δt 50°C 75/65-20 W	Output Δt 42,5°C 70/55-20 W	Output Δt 30°C 55/45-20 W
300	240	outp	457	367	230	727	589	376	878	706	443	1148	921	574
		cod.	0146103854			0146203854			0146213854			0146223854		
400	340	outp	609	490	307	969	785	501	1170	942	591	1531	1228	766
		cod.	0146104854			0146204854			0146214854			0146224854		
500	440	outp	762	612	383	1211	982	626	1463	1177	739	1913	1535	957
		cod.	0146105854			0146205854			0146215854			0146225854		
600	540	outp	914	735	460	1453	1178	752	1755	1413	887	2296	1842	1149
		cod.	0146106854			0146206854			0146216854			0146226854		
700	640	outp	1066	857	537	1695	1375	877	2048	1648	1035	2679	2149	1340
		cod.	0146107854			0146207854			0146217854			0146227854		
900	840	outp	1371	1102	690	2180	1767	1127	2633	2119	1330	3444	2763	1723
		cod.	0146109854			0146209854			0146219854			0146229854		

For coloured versions, please contact RADIATORS customer service.

LINEAR C6 Vertical

H 2000			10			20			21			22		
Depth (mm)			63			71			71			103		
Exponent (n)			1,330			1,286			1,341			1,357		
Length (mm)	Pipe center (mm)		Output Δt 50°C 75/65-20 W	Output Δt 42,5°C 70/55-20 W	Output Δt 30°C 55/45-20 W	Output Δt 50°C 75/65-20 W	Output Δt 42,5°C 70/55-20 W	Output Δt 30°C 55/45-20 W	Output Δt 50°C 75/65-20 W	Output Δt 42,5°C 70/55-20 W	Output Δt 30°C 55/45-20 W	Output Δt 50°C 75/65-20 W	Output Δt 42,5°C 70/55-20 W	Output Δt 30°C 55/45-20 W
300	240	outp	506	407	256	809	657	420	944	759	476	1239	994	619
		cod.	0146103860			0146203860			0146213860			0146223860		
400	340	outp	674	543	342	1079	875	559	1258	1012	634	1652	1325	826
		cod.	0146104860			0146204860			0146214860			0146224860		
500	440	outp	843	679	427	1348	1094	699	1573	1265	793	2065	1657	1032
		cod.	0146105860			0146205860			0146215860			0146225860		
600	540	outp	1012	815	513	1618	1313	839	1888	1518	951	2478	1988	1239
		cod.	0146106860			0146206860			0146216860			0146226860		
700	640	outp	1180	951	598	1888	1532	979	2202	1771	1110	2892	2319	1445
		cod.	0146107860			0146207860			0146217860			0146227860		
900	840	outp	1517	1222	769	2427	1970	1259	2831	2277	1427	3718	2982	1858
		cod.	0146109860			0146209860			0146219860			0146229860		

H 2200			10			20			21			22		
Depth (mm)			63			71			71			103		
Exponent (n)			1,318			1,381			1,346			1,359		
Length (mm)	Pipe center (mm)		Output Δt 50°C 75/65-20 W	Output Δt 42,5°C 70/55-20 W	Output Δt 30°C 55/45-20 W	Output Δt 50°C 75/65-20 W	Output Δt 42,5°C 70/55-20 W	Output Δt 30°C 55/45-20 W	Output Δt 50°C 75/65-20 W	Output Δt 42,5°C 70/55-20 W	Output Δt 30°C 55/45-20 W	Output Δt 50°C 75/65-20 W	Output Δt 42,5°C 70/55-20 W	Output Δt 30°C 55/45-20 W
300	240	outp	563	454	287	899	730	467	1008	810	507	1327	1064	662
		cod.	0146103866			0146203866			0146213866			0146223866		
400	340	outp	750	606	383	1198	973	623	1344	1080	676	1769	1418	883
		cod.	0146104866			0146204866			0146214866			0146224866		
500	440	outp	938	757	479	1498	1216	779	1680	1350	845	2211	1773	1104
		cod.	0146105866			0146205866			0146215866			0146225866		
600	540	outp	1126	909	574	1798	1460	934	2016	1620	1014	2653	2127	1325
		cod.	0146106866			0146206866			0146216866			0146226866		
700	640	outp	1313	1060	670	2097	1703	1090	2352	1890	1182	3095	2482	1546
		cod.	0146107866			0146207866			0146217866			0146227866		
900	840	outp	1689	1363	861	2696	2190	1401	3024	2430	1520	3980	3191	1987
		cod.	0146109866			0146209866			0146219866			0146229866		

H 2400			10			20			21			22		
Depth (mm)			63			71			71			103		
Exponent (n)			1,309			1,276			1,352			1,376		
Length (mm)	Pipe center (mm)		Output Δt 50°C 75/65-20 W	Output Δt 42,5°C 70/55-20 W	Output Δt 30°C 55/45-20 W	Output Δt 50°C 75/65-20 W	Output Δt 42,5°C 70/55-20 W	Output Δt 30°C 55/45-20 W	Output Δt 50°C 75/65-20 W	Output Δt 42,5°C 70/55-20 W	Output Δt 30°C 55/45-20 W	Output Δt 50°C 75/65-20 W	Output Δt 42,5°C 70/55-20 W	Output Δt 30°C 55/45-20 W
300	240	outp	629	509	322	995	809	519	1070	859	536	1410	1128	698
		cod.	0146103872			0146203872			0146213872			0146223872		
400	340	outp	839	678	430	1327	1079	692	1427	1145	715	1880	1504	931
		cod.	0146104872			0146204872			0146214872			0146224872		
500	440	outp	1048	848	537	1659	1348	865	1783	1432	894	2351	1879	1164
		cod.	0146105872			0146205872			0146215872			0146225872		
600	540	outp	1258	1017	645	1991	1618	1037	2140	1718	1073	2821	2252	1397
		cod.	0146106872			0146206872			0146216872			0146226872		
700	640	outp	1468	1187	752	2323	1888	1210	2497	2004	1252	3291	2631	1629
		cod.	0146107872			0146207872			0146217872			0146227872		
900	840	outp	1887	1526	967	2986	2427	1556	3210	2577	1609	4231	3383	2095
		cod.	0146109872			0146209872			0146219872			0146229872		

For coloured versions, please contact RADIATORS customer service.

Note

Replacement side panels and grilles - LINEAR

REPLACEMENT SIDE PANELS FOR LINEAR

Type	Height	11	21	22	33
C4-V6	300	7380000000	7380012400	7380003000	7380018300
C4-V6	400	7380000100	7380012500	7380003100	7380004300
C4-V6	500	7380000200	7380012600	7380003200	7380004400
C4-V6	600	7380000300	7380012700	7380003300	7380004500
C4-V6	700	7380000400	7380012800	7380003400	7380004600
C4-V6	900	7380000500	7380012900	7380003500	7380004700

REPLACEMENT GRILLES FOR LINEAR

Type	Height	11	21	22	33
all	400	7380006000	7380013000	7380009200	7380010800
	500	7380006100	7380013100	7380009300	7380010900
	600	7380006200	7380013200	7380009400	7380011000
	700	7380006300	7380013300	7380009500	7380011100
	800	7380006400	7380013400	7380009600	7380011200
	900	7380006500	7380013500	7380009700	7380011300
	1000	7380006600	7380013600	7380009800	7380011400
	1100	7380006700	7380013700	7380009900	7380011500
	1200	7380006800	7380013800	7380010000	7380011600
	1400	7380006900	7380013900	7380010100	7380011700
	1600	7380007000	7380014000	7380010200	7380011800
	1800	7380007100	7380014100	7380010300	7380011900
	2000	7380007200	7380014200	7380010400	7380012000
	2300	7380007300	7380014300	7380010500	7380012100
	2600	7380007400	7380014400	7380010600	7380012200
	3000	7380007500	7380014500	7380010700	7380012300

REPLACEMENT SIDE PANELS FOR LINEAR C6 VERTICAL

Short description	Code	
Repl. side panels 20 1400 NE	7384002700	repl. 20/21 vert.
Repl. side panels 20 1600 NE	7384002800	repl. 20/21 vert.
Repl. side panels 20 1800 NE	7384002900	repl. 20/21 vert.
Repl. side panels 20 2000 NE	7384003000	repl. 20/21 vert.
Repl. side panels 20 2200 NE	7384003100	repl. 20/21 vert.
Repl. side panelsi 20 2400 NE	7384003300	repl. 20/21 vert.
Repl. side panels 22 1400 NE	7384004600	repl. 22 vert.
Repl. side panels 22 1600 NE	7384004700	repl. 22 vert.
Repl. side panels 22 1800 NE	7384004800	repl. 22 vert.
Repl. side panels 22 2000 NE	7384004900	repl. 22 vert.
Repl. side panels 22 2200 NE	7384005000	repl. 22 vert.
Repl. side panels 22 2400 NE	7384005100	repl. 22 vert.

REPLACEMENT GRILLE FOR LINEAR C6 VERTICAL

Short description	Code	
Replacement vertical L 300	7384002000	Repl. grille 20/21
Replacement vertical L 400	7384002100	Repl. grille 20/21
Replacement vertical L 500	7384002200	Repl. grille 20/21
Replacement vertical L 600	7384002300	Repl. grille 20/21
Replacement vertical L 700	7384002400	Repl. grille 20/21
Replacement vertical L 900	7384002500	Repl. grille 20/21
Replacement vertical L 300	7384005200	Repl. grille 22
Replacement vertical L 400	7384005300	Repl. grille 22
Replacement vertical L 500	7384005400	Repl. grille 22
Replacement vertical L 600	7384005500	Repl. grille 22
Replacement vertical L 700	7384005600	Repl. grille 22
Replacement vertical L 900	7384005700	Repl. grille 22

REPLACEMENT GRILLE CLIP FOR LINEAR

Short description	Code
Plastic grille clip 11	5380000301
Plastic grille clip 21	5380000401
Plastic grille clip 22	5380000501
Plastic grille clip 33	5380000301 5380000501
Plastic screw 1 for grille clip	535295

Weights, water content and surface area - LINEAR

LINEAR C4 COMPACT

		Height					
Model	Characteristic	300	400	500	600	700	900
11	Water content (l/m)	2,10	2,59	3,07	3,55	4,05	5,05
	Weight (kg/m)	13,30	17,00	21,20	25,02	29,80	38,40
	Surface area (m2/m)	1,19	2,18	3,16	4,14	4,90	7,09
20	Water content (l/m)	4,20	5,17	6,13	7,10	8,10	10,10
	Weight (kg/m)	16,42	21,76	27,97	31,47	36,14	48,02
	Surface area (m2/m)	0,62	1,68	2,11	2,52	2,70	3,66
21	Water content (l/m)	4,20	5,17	6,13	7,10	8,10	10,10
	Weight (kg/m)	17,40	23,00	27,50	33,10	39,00	50,00
	Surface area (m2/m)	1,87	3,10	4,30	5,50	6,50	9,17
22	Water content (l/m)	4,20	5,17	6,13	7,10	8,10	10,10
	Weight (kg/m)	19,58	25,98	31,91	39,11	45,54	59,00
	Surface area (m2/m)	2,40	4,36	6,33	8,30	10,50	14,21
33	Water content (l/m)	6,10	7,87	9,63	11,40	12,73	15,40
	Weight (kg/m)	28,12	37,38	46,81	55,29	64,51	84,44
	Surface area (m2/m)	3,61	6,57	9,53	12,49	15,79	21,37

LINEAR V6 L

		Height					
Model	Characteristic	300	400	500	600	700	900
11	Water content (l/m)	2,10	2,59	3,07	3,55	4,05	5,05
	Weight (kg/m)	13,30	17,00	21,20	25,02	29,80	38,40
	Surface area (m2/m)	1,19	2,18	3,16	4,14	4,90	7,09
20	Water content (l/m)	4,20	5,17	6,13	7,10	8,10	10,10
	Weight (kg/m)	16,49	21,79	27,95	31,39	35,97	47,76
	Surface area (m2/m)	0,62	1,68	2,11	2,52	2,70	3,66
21	Water content (l/m)	4,20	5,17	6,13	7,10	8,10	10,10
	Weight (kg/m)	18,07	23,90	30,42	35,21	41,17	53,25
	Surface area (m2/m)	1,52	3,02	4,22	5,31	6,64	8,99
22	Water content (l/m)	4,20	5,17	6,13	7,10	8,10	10,10
	Weight (kg/m)	19,65	26,01	32,89	39,03	46,37	58,74
	Surface area (m2/m)	2,40	4,36	6,33	8,30	10,50	14,21
33	Water content (l/m)	6,10	7,87	9,63	11,40	12,73	15,40
	Weight (kg/m)	28,19	37,43	46,67	55,18	64,35	84,13
	Surface area (m2/m)	3,61	6,57	9,53	12,49	15,79	21,37

LINEAR V6 C

		Height					
Model	Characteristic	300	400	500	600	700	900
11	Water content (l/m)	2,10	2,59	3,07	3,55	4,05	5,05
	Weight (kg/m)	13,30	17,00	21,20	25,02	29,80	38,40
	Surface area (m2/m)	1,19	2,18	3,16	4,14	4,90	7,09
21	Water content (l/m)	4,20	5,17	6,13	7,10	8,10	10,10
	Weight (kg/m)	18,71	24,98	21,15	37,32	43,59	55,39
	Surface area (m2/m)	1,52	3,02	4,22	5,31	6,64	8,99
22	Water content (l/m)	4,20	5,17	6,13	7,10	8,10	10,10
	Weight (kg/m)	21,95	29,30	36,55	43,80	51,15	65,65
	Surface area (m2/m)	2,40	4,36	6,33	8,30	10,50	14,21
33	Water content (l/m)	6,10	7,87	9,63	11,40	12,73	15,40
	Weight (kg/m)	31,40	41,90	52,30	62,70	73,20	94,00
	Surface area (m2/m)	3,61	6,57	9,53	12,49	15,79	21,37

LINEAR C4 HYGIENE

		Height					
Model	Characteristic	300	400	500	600	700	900
10	Water content (l/m)	2,10	2,59	3,07	3,55	4,05	5,05
	Weight (kg/m)	9,14	12,03	14,73	17,23	20,56	25,24
	Surface area (m2/m)	0,31	0,84	1,06	1,26	1,35	1,83
20	Water content (l/m)	4,20	5,17	6,13	7,10	8,10	10,10
	Weight (kg/m)	14,76	19,45	23,75	28,42	33,76	42,51
	Surface area (m2/m)	0,62	1,68	2,11	2,52	2,70	3,66
30	Water content (l/m)	6,10	7,87	9,63	11,40	12,73	15,40
	Weight (kg/m)	21,09	27,98	33,73	40,33	47,89	60,22
	Surface area (m2/m)	2,02	5,00	7,97	10,94	13,92	19,86

LINEAR V6 HYGIENE

		Height					
Model	Characteristic	300	400	500	600	700	900
10	Water content (l/m)	2,10	2,59	3,07	3,55	4,05	5,05
	Weight (kg/m)	8,98	11,96	14,82	17,33	20,86	25,60
	Surface area (m2/m)	0,31	0,84	1,06	1,26	1,35	1,83
20	Water content (l/m)	4,20	5,17	6,13	7,10	8,10	10,10
	Weight (kg/m)	14,83	19,48	23,73	28,34	33,59	42,25
	Surface area (m2/m)	0,62	1,68	2,11	2,52	2,70	3,66
30	Water content (l/m)	6,10	7,87	9,63	11,40	12,73	15,40
	Weight (kg/m)	21,16	27,33	33,69	40,22	47,73	59,91
	Surface area (m2/m)	2,02	5,00	7,97	10,94	13,92	19,86

Weights, water content and surface area - LINEAR C6 Vertical

			Length					
Model	Height	Characteristic	300	400	500	600	700	900
10	1400	Water content (l/m)	2,49	3,32	4,16	4,99	5,82	7,48
		Weight (kg/m)	11,70	15,60	19,50	23,40	27,30	35,10
	1600	Water content (l/m)	2,73	3,64	4,55	5,45	6,36	8,18
		Weight (kg/m)	13,47	17,96	22,46	26,95	31,44	40,42
	1800	Water content (l/m)	2,95	3,94	4,92	5,90	6,89	8,86
		Weight (kg/m)	15,25	20,33	25,41	30,49	35,57	45,74
	2000	Water content (l/m)	3,33	4,44	5,55	6,66	7,77	9,99
		Weight (kg/m)	16,87	22,49	28,11	33,73	39,35	50,60
	2200	Water content (l/m)	3,80	5,07	6,33	7,60	8,87	11,40
		Weight (kg/m)	18,55	24,73	30,92	37,10	43,28	55,65
	2400	Water content (l/m)	4,15	5,53	6,92	8,30	9,68	12,45
		Weight (kg/m)	20,25	27,00	33,75	40,50	47,25	60,75

			Length					
Model	Height	Characteristic	300	400	500	600	700	900
20	1400	Water content (l/m)	5,00	6,66	8,33	9,99	11,66	14,99
		Weight (kg/m)	20,40	27,20	34,01	40,81	47,61	61,21
	1600	Water content (l/m)	5,50	7,33	9,17	11,00	12,83	16,50
		Weight (kg/m)	23,21	30,95	38,69	46,42	54,16	69,63
	1800	Water content (l/m)	6,00	8,00	10,01	12,01	14,01	18,01
		Weight (kg/m)	26,01	34,68	43,35	52,02	60,59	78,03
	2000	Water content (l/m)	6,74	8,99	11,24	13,48	15,73	20,22
		Weight (kg/m)	28,83	38,44	48,05	57,65	67,26	86,48
	2200	Water content (l/m)	7,70	10,27	12,83	15,40	17,97	23,10
		Weight (kg/m)	31,50	42,00	52,50	63,00	73,50	94,50
	2400	Water content (l/m)	8,25	11,00	13,75	16,50	19,25	24,75
		Weight (kg/m)	34,25	45,67	57,08	68,50	79,92	102,75

			Length					
Model	Height	Characteristic	300	400	500	600	700	900
21	1400	Water content (l/m)	5,00	6,66	8,33	9,99	11,66	14,99
		Weight (kg/m)	24,35	32,46	40,58	48,69	56,81	73,04
	1600	Water content (l/m)	5,50	7,33	9,17	11,00	12,83	16,50
		Weight (kg/m)	27,80	37,07	46,34	55,60	64,87	83,40
	1800	Water content (l/m)	6,00	8,00	10,01	12,01	14,01	18,01
		Weight (kg/m)	31,25	41,66	52,08	62,50	72,91	93,74
	2000	Water content (l/m)	6,74	8,99	11,24	13,48	15,73	20,22
		Weight (kg/m)	34,77	46,36	57,95	69,53	81,12	104,30
	2200	Water content (l/m)	7,70	10,27	12,83	15,40	17,97	23,10
		Weight (kg/m)	37,20	49,60	62,00	74,40	86,80	111,60
	2400	Water content (l/m)	8,25	11,00	13,75	16,50	19,25	24,75
		Weight (kg/m)	40,55	54,07	67,58	81,10	94,62	121,65

			Length					
Model	Height	Characteristic	300	400	500	600	700	900
22	1400	Water content (l/m)	5,00	6,66	8,33	9,99	11,66	14,99
		Weight (kg/m)	28,20	37,59	47,00	56,40	65,80	84,60
	1600	Water content (l/m)	5,50	7,33	9,17	11,00	12,83	16,50
		Weight (kg/m)	31,65	42,20	52,76	63,31	73,86	94,96
	1800	Water content (l/m)	6,00	8,00	10,01	12,01	14,01	18,01
		Weight (kg/m)	35,10	46,79	58,50	70,21	81,90	105,30
	2000	Water content (l/m)	6,74	8,99	11,24	13,48	15,73	20,22
		Weight (kg/m)	38,62	51,49	64,37	77,24	90,11	105,86
	2200	Water content (l/m)	7,70	10,27	12,83	15,40	17,97	23,10
		Weight (kg/m)	41,05	54,73	68,42	82,11	95,79	123,16
	2400	Water content (l/m)	8,25	11,00	13,75	16,50	19,25	24,75
		Weight (kg/m)	44,40	59,20	74,00	88,81	103,61	133,21

Connection method

Linear C4 Compact - Linear C4 Hygiene

Two-pipe

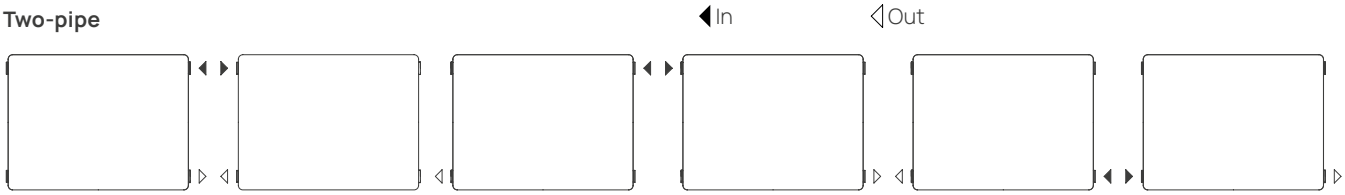

The connection methods described here are symmetric.
Linear C4 can be connected with a two-pipe connection as follows:

- high/low same side (all EN442 heat outputs are calculated and verified with this type of connection),
- high/low opposite side (the best way to connect panels longer than 1000 mm),

low/low opposite side (this connection method reduces heat output by about 10%).
Two-pipe connection needs one thermostatic valve (with eventually one thermostatic head) and one holder.

One-pipe (feed from a single connection point)

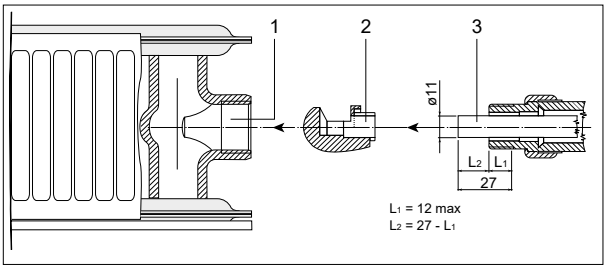

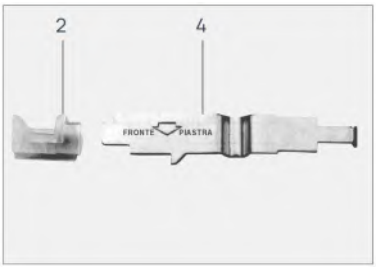

Linear C4 can be connected with a one-pipe connection using the special flow deflector (2) inserted in the connection point (1) using the key (4). To connect to a one-pipe installation, a one-pipe valve with probe (not available from RADIATORS) is required. The probe
must have a maximum length of 11 mm and the length of the external probe and the thread inside the valve must not exceed 27 mm (3).

One-pipe connection kit

Code	Description
5380003300	Flow deector for one-pipe valve
611561	Flow deector key

Pressure drop and valve regulation

Two-pipe system

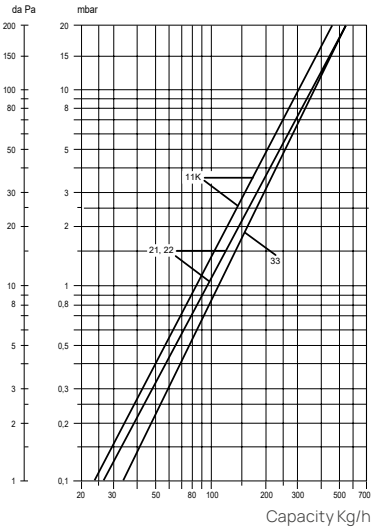

Diagram 1: Pressure drops for two-pipe system Pressure drops Δp are expressed in daPa and mbar.

1 mm H2O col. = 0.0981 mbar

Pressure drop diagram for LINEAR panels

The values are obtained with the 1/2" G connection on one side only.
basic models 11K
basic models 21 and 22
basic models 33

One-pipe system

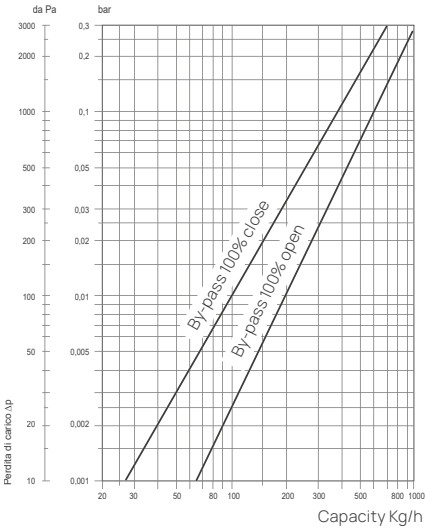

Diagram 2: Pressure drops for one-pipe system with flow deflector. Pressure drops refer to panels with special valve for one-pipe system and including special flow deflectors. They are expressed in daPa and bar. The pressure drop diagram shows the extreme pressure drop values for LINEAR panels for basic models 21, 22 and 33. Bear in mind the requirements for special one-pipe valves.

Connection method

Linear V6 L - Linear V6 C - Linear V6 Hygiene

Linear V6 L e V6 Igiene

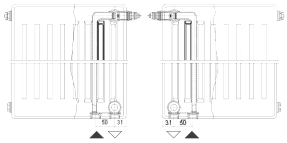

Regulation is based on the 70/55-20 heat output of the radiator and the pressure drop of the insert mounted (0.1 bar). To reset if necessary, the value to be set for the thermostatic insert (two-pipe connection) can be obtained from the Q Flow Rate diagrams (expressed in kg/h). Pressure drop Cp (expressed in bar or kPa). Starting from the t set in the system and the power of the radiator (EN442 standard output), the intersection with the pressure drop value on the X axis determines the nearest kv at which to set the insert (for example: position 3 or 4).

Linear V6 C

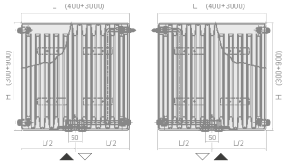

The value to be set for the thermostatic insert (two-pipe connection) can be obtained from the Q Flow Rate diagrams (expressed in kg/h) - Pressure drop p (expressed in bars or kPa). Starting from the t set in the system and the power of the radiator (EN442 standard output), the intersection with the pressure drop value on the X axis determines the nearest kv at which to set the insert (for example: position 3 or 4).

Two-pipe connection

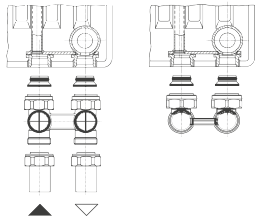

V6 model can be connected to a two-pipe system using a straight or "L" distributor.
Our range of distributors are provided with Eurocone insert for connection to the 3/4" externally threaded connections on the Plattella models. The nozzle on the distributors provided for draining the radiator can be connected to the draining
device.

Two-pipe Distributors

Code	Description
5580013600	Straight distributor - TWO-PIPE
5580013700	"L" distributor - TWO-PIPE
5580103500	Straight distributor - TWO-PIPE - designed for radiator drain
5580193600	"L" distributor - TWO-PIPE - designed for radiator drain

One-pipe connection method (single-point connection method)

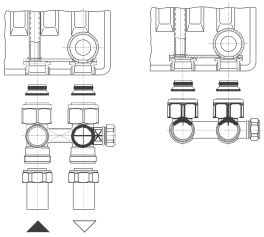

V6 steel panel can be connected to a one-pipe system using a straight or "L" distributor. Our range of distributors are provided with Eurocone insert for connection to the 3/4" threaded connections on the V8 models. On the distributor side the by-pass must be regulated to define the water flow entering the radiator and the flow bypassing it to continue in the circuit.

One-pipe distributors

Code	Description
5580008200	Straight distributor - ONE-PIPE
5580008300	"L" distributor - ONE-PIPE

Valve - part numbers

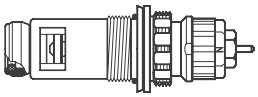

RADIATORS code	Presetting	Dimension
5580139900	NN	M23 x 1,5
5580140000	-	M30 x 1,5

Connection method

Linear V6 L - Linear V6 C - Linear V6 Hygiene

Pressure drop and valve regulation (rif. cod. 5580139900) - two-pipe system

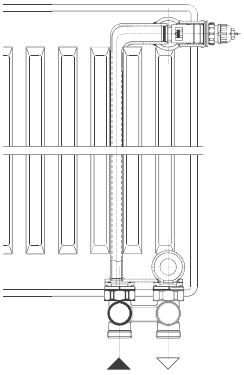

Fig. 1

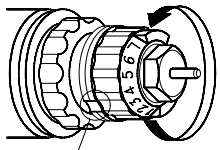

Fig. 2

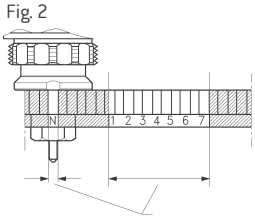

Fig. 3

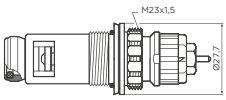

"L" or straight distributors can be used in two-pipe installations.

These distributors incorporate two gate valves to intercept both the input and output flows. To ensure the thermostatic head maintains room temperature precisely, the built-in thermostatic valve must be adjusted to achieve a pressure drop of 0.1 bar in the radiator (use diagram 2).

REGULATION

The value obtained from the diagram can be easily set on the thermostatic valve without tools:

- Remove the protective cap,
- Turn the adjustment ring until the pointer corresponds to the required value on the graduated scale (fig. 1).

The setting is continuous from 1 to 7 (fig. 2).
In position N, the valve is fully open.

Example:

- Model 21/600-1000
- Power = 1325 W
- With Δt = 15°C and Δp = 0,1 bar diagram 1 gives the valve setting value 3 (water flow)

Pressure drop and valve regulation (rif. cod. 5580139900) - one-pipe system

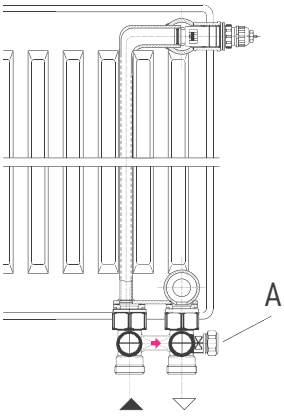

Diagram 1

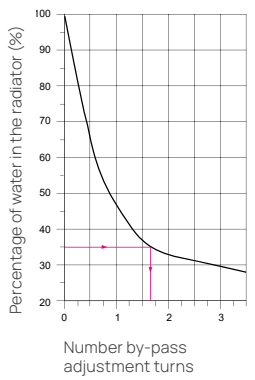

For one-pipe installations, a straight or "L" distributor with adjustable by-pass is required. The thermostatic valve must be set to position N (radiators are normally marked with the valve in this position - the panels are factory pre-set). When the percentage flow rate in the radiator is known (with respect to the total flow in the installation), the no. of turns to be set on the by-pass can be obtained from diagram 1. The by-pass under the cover A of the distributor can then be adjusted using an Allen key by the number of turns indicated in the table. To know the pressure drop in the radiator, use diagram 2. Once the total flow in the installation and the percentage flow in the radiator are known, the pressure drop in meters water column or bars can be obtained.

Example:

Given: Total heat flow in loop (5814 Watt)
Δt = 10°C (75/65°C)
35% flow rate in exchanger

Obtain: by-pass adjustment value and pressure drop in radiator

Solution: Flow rate in loop $m = \frac{Q}{c \times \Delta t} = \frac{5814 \times 0{,}86}{1 \times 10} = 500$ kg/h

From table 1: no. of by-pass turns = 1 and 3/4
From diagram 2 Δp = 0,1 bar

The flow rate in the radiator can be regulated subsequently, including during operation. The distributor can also be used as a blind bridge if the radiator is mounted subsequently or dismounted, without having to empty the installation.

Diagram 2

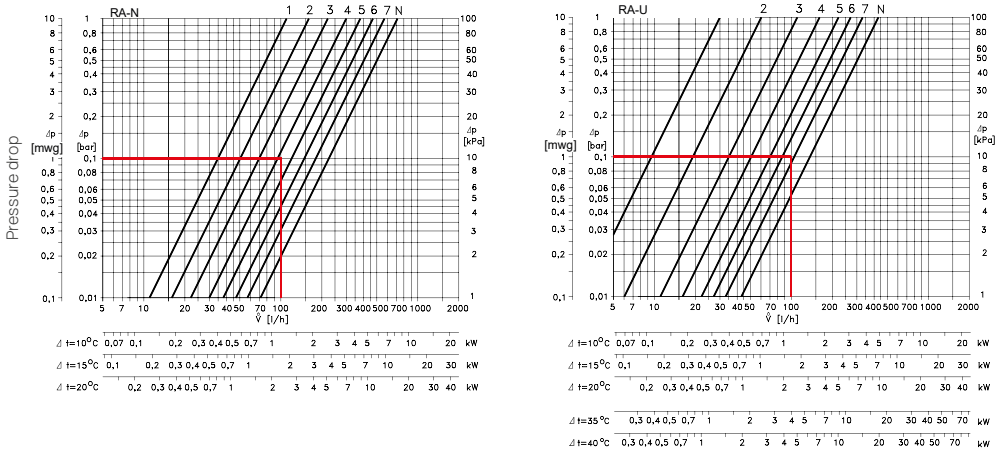

Connection method

Linear C6 Vertical

The Vertical panels can be connected to a two-pipe system as follows:
- top/bottom opposite side (1, 2),
- bottom/bottom opposite side (3),
- top/top opposite side (4);

connections and in the configuration with bottom (5) or top (6) central connection.
The top/top opposite side connection (4) and top central connection (6) are applicable only and exclusively with the panel in configuration AA (top connection) as in this case there is a deflector installed in the radiator and it is without grille. Configurations 3, 4, 5 and 6 are symmetrical with respect to the indications in the drawings below (the output and input indicated by the arrows can be reversed). Two-pipe connection with connections at the sides of the panel requires a thermostatic valve (possibly with thermostatic head) and lockshield. When connecting with connections at the sides of the panel, the central connection must be sealed with two blind plugs.

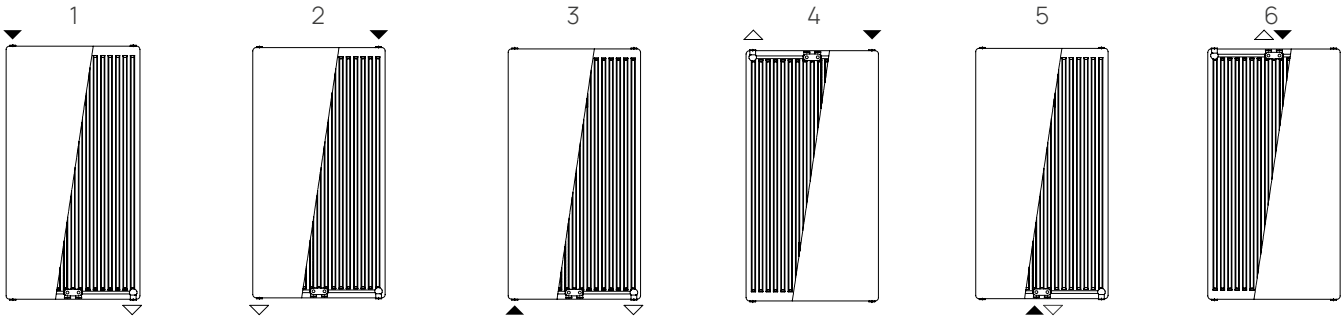

Configurations

When ordering, please indicate the desired configuration:
- AB bottom connection
- AA top connection

In the case of the top connection (AA), the 8 in the third to last position of the code must be replaced with a 9. Example:
0146214854 is a Vertical 21 1800x400 panel with bottom connections (AB); 0146214954 is a Vertical 21 1800x400 panel with top connections (AA).

CONFIGURATION AB:
Bottom connection, with top grille

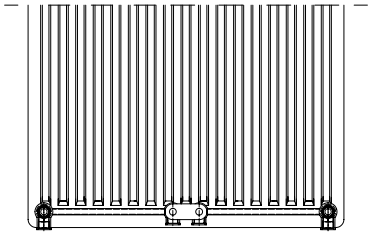

CONFIGURATION AA:
Top connection, without top grille

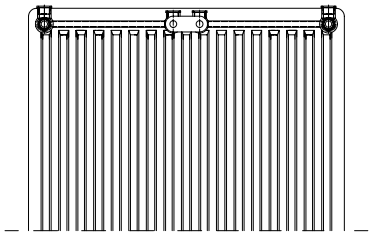

Fixing brackets

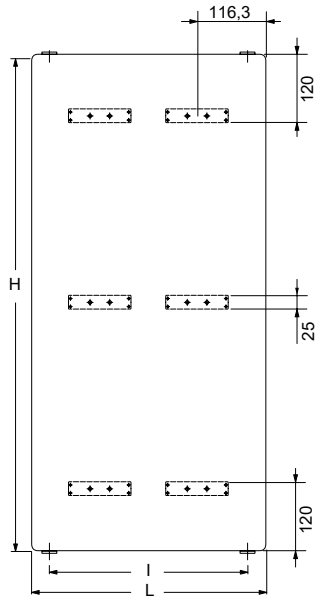

Vertical 300 mm wide panels are provided with a welded support at the back, but they nevertheless require fixing with 2 brackets, as do all larger widths.

Total dimensions

Linear C4 Compact

		Dimensions per model (mm)				
		11	20	21	22	33
Panel depth excluding back supports	A	64	67	67	101	158
Total depth from back of support to front panel**	B	76	76	76	110	167
Distance from back support to connection**	C	40	42	42	59	59
Distance from wall to centre of connection (mounting the panel on the GB brackets for purchase separately)*	D	57/65	91	91	74/81	74/81
Total distance from wall to front panel (mounting the panel radiator on the GB brackets for purchase separately)*	E	90/98	99	99	124/132	181/189

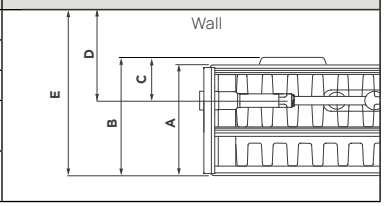

* The total distance changes depending on the depth of the side of the shelf chosen.
** When calculating the total size occupied by the panel radiator (from the wall to the front panel) with the chosen wall brackets: the useful length of the chosen bracket must be added to this measurement.

Linear C4 Special

	Height (mm)	
	600	700
Pipe centre side 1 (Special pipe centre)	500	600
Pipe centre side 2	540	640

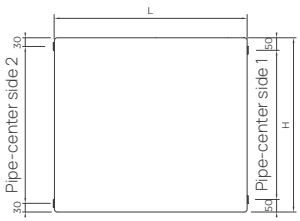

Linear V6 L

		Dimensions per model (mm)				
		11	20	21	22	33
Panel depth excluding back supports	A	64	67	67	101	158
Total depth from back of support to front panel	B	76	-	-	-	-
Distance from back support to connection	C	40	33	33	50	50
Distance from wall to centre of connection (mod.11 GB brackets)*	D	57/65	63	63	80	80
Total distance from wall to front panel (mod.11 GB brackets)*	E	91/99	97	97	131	188

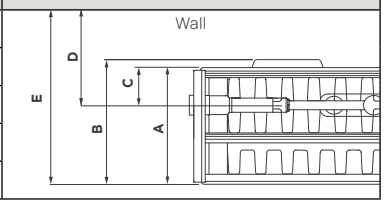

The dimensions indicated for model 11 refer to the fixing kit GB.
The dimensions indicated for the models 21, 22 and 33 refer to the fixing kit F7.
* The footprint changes depending on the depth of the side of the shelf chosen

Linear V6 C

		Dimensions per model (mm)			
		11	21	22	33
Panel depth excluding back supports	A	64	67	101	158
Total depth from back of support to front panel	B	76	-	-	-
Distance from back support to connection	C	40	33	50	50
Distance from wall to centre of connection (mod.11 GB brackets)*	D	57/65	63	80	80
Total distance from wall to front panel (mod.11 GB brackets)*	E	91/99	97	131	188

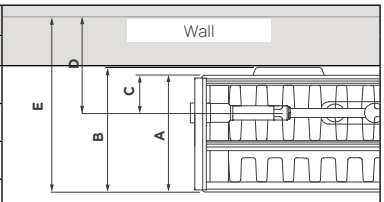

The dimensions indicated for model 11 refer to the fixing kit GB.
The dimensions indicated for the models 21, 22 and 33 refer to the fixing kit F7.
* The footprint changes depending on the depth of the side of the shelf chosen

Total dimensions

Linear C4 Hygiene

		Dimensions per model (mm)		
		10	20	30
Panel depth excluding back supports	A	64	67	158
Total depth from back of support to front panel**	B	64	76	167
Distance from back support to connection	C	-	42	59
Distance from wall to centre of connection (mounting the panel radiator on the GB brackets provided as standard)*	D	34	59/67	74/81
Total distance from wall to front panel (mounting the panel radiator on the GB brackets provided as standard)*	E	69	94/102	175/183

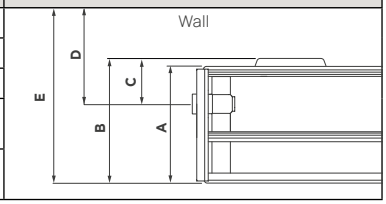

* The overall dimensions change depending on the depth of the side of the shelf chosen, model 10 on D30
** For the calculation of the overall dimensions of the plate (wall to front panel) with shelves/wall brackets of your choice: add to this size the useful size of the shelf chosen.

Linear V6 Hygiene

		Dimensions per model (mm)		
		10	20	30
Panel depth excluding back supports	A	64	67	158
Total depth from back of support to front panel**	B	-	76	167
Distance from back support to connection	C	-	42	59
Distance from wall to centre of connection (mounting the panel radiator on the GB brackets provided as standard)*	D	34	59/67	74/81
Total distance from wall to front panel (mounting the panel radiator on the GB brackets provided as standard)*	E	69	94/102	175/183

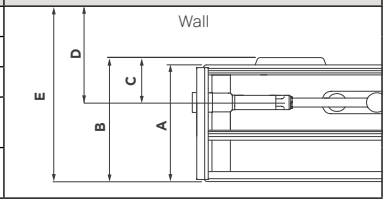

The dimensions indicated for model 20 and 30 refer to the fixing kit F7.
The dimensions indicated for the 10 models refer to the fixing kit GB.
* The overall dimensions change depending on the depth of the side of the shelf chosen, model 10 on D30
** For the calculation of the overall dimensions of the plate (wall to front panel) with shelves/wall brackets of your choice: add to this size the useful size of the shelf chosen.

Linear C6 Vertical

		Dimensions per model (mm)			
		10	20	21	22
Panel depth excluding back supports	A	63	71	71	103
Total depth from back of support to front panel**	B	63	78	78	112
Distance from back support to connection	C	-	43	43	60
Distance from wall to centre of connection (mounting the panel radiator on the GB brackets provided as standard)*	D	35	58/66	58/66	74/82
Total distance from wall to front panel (mounting the panel radiator on the GB brackets provided as standard)*	E	71	94/102	94/102	126/134

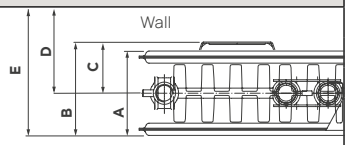

* The total distance changes depending on the depth of the side of the shelf chosen.
** When calculating the total size occupied by the panel radiator (from the wall to the front panel) with the chosen wall brackets: the useful length of the chosen bracket must be added to this measurement

Palletizing

Linear C4 Compact

	11						21						22						33					
H.	300	400	500	600	700	900	300	400	500	600	700	900	300	400	500	600	700	900	300	400	500	600	700	900
L.																								
400	24	24	24	24	24	24	24	24	24	24	24	20	16	16	16	16	16	16	16	16	12	12	12	12
500	24	24	24	24	24	24	24	24	24	24	24	20	16	16	16	16	16	16	16	16	12	12	12	12
600	13	13	13	13	13	13	13	13	13	13	13	13	9	9	9	9	9	9	9	9	6	6	6	6
700	13	13	13	13	13	13	13	13	13	13	13	13	9	9	9	9	9	9	9	9	6	6	6	6
800	13	13	13	13	13	13	13	13	13	13	13	13	9	9	9	9	9	9	6	6	6	6	6	6
900	13	13	13	13	13	13	13	13	13	13	13	13	9	9	9	9	9	9	6	6	6	6	6	6
1000	13	13	13	13	13	13	13	13	13	13	13	13	9	9	9	9	9	9	6	6	6	6	6	6
1100	13	13	13	13	13	13	13	13	13	13	13	13	9	9	9	9	9	9	6	6	6	6	6	6
1200	13	13	13	13	13	13	13	13	13	13	13	13	9	9	9	9	9	9	6	6	6	6	6	6
1400	13	13	13	13	13	13	13	13	13	13	13	13	9	9	9	9	9	9	6	6	6	6	6	6
1600	13	13	13	13	13	13	13	13	13	13	13	13	9	9	9	9	9	9	6	6	6	6	6	6
1800	13	13	13	13	13	13	13	13	13	13	13	13	9	9	9	9	9	9	6	6	6	6	6	6
2000	13	13	13	13	13	13	13	13	13	13	13	13	9	9	9	9	9	9	6	6	6	6	6	6
2300	13	13	13	13	13	13	13	13	13	13	13	13	9	9	9	9	9	9	6	6	6	6	6	6
2600	13	13	13	13	13	13	13	13	13	13	13	13	9	9	9	9	9	9	6	6	6	6	6	6
3000	13	13	13	13	13	13	13	13	13	13	13	13	9	9	9	9	9	9	6	6	6	6	6	6

Linear C4 Special

	11						21						22						33					
H.	300	400	500	600	700	900	300	400	500	600	700	900	300	400	500	600	700	900	300	400	500	600	700	900
L.																								
400																16	16					12	12	
500																16	16					12	12	
600																9	9					6	6	
700																9	9					6	6	
800																9	9					6	6	
900																9	9					6	6	
1000																9	9					6	6	
1100																9	9					6	6	
1200																9	9					6	6	
1400																9	9					6	6	
1600																9	9					6	6	
1800																9	9					6	6	
2000																9	9					6	6	
2300																9	9					6	6	
2600																9	9					6	6	
3000																9	9					6	6	

Palletizing

Linear V6 L

	11						21						22						33					
H.	300	400	500	600	700	900	300	400	500	600	700	900	300	400	500	600	700	900	300	400	500	600	700	900
L.																								
400	24	24	24	24	24	24	24	24	24	24	24	20	16	16	16	16	16	16	12	12	12	12	12	12
500	24	24	24	24	24	24	24	24	24	24	24	20	16	16	16	16	16	16	12	12	12	12	12	12
600	13	13	13	13	13	13	13	13	13	13	13	13	9	9	9	9	9	9	6	6	6	6	6	6
700	13	13	13	13	13	13	13	13	13	13	13	13	9	9	9	9	9	9	6	6	6	6	6	6
800	13	13	13	13	13	13	13	13	13	13	13	13	9	9	9	9	9	9	6	6	6	6	6	6
900	13	13	13	13	13	13	13	13	13	13	13	13	9	9	9	9	9	9	6	6	6	6	6	6
1000	13	13	13	13	13	13	13	13	13	13	13	13	9	9	9	9	9	9	6	6	6	6	6	6
1100	13	13	13	13	13	13	13	13	13	13	13	13	9	9	9	9	9	9	6	6	6	6	6	6
1200	13	13	13	13	13	13	13	13	13	13	13	13	9	9	9	9	9	9	6	6	6	6	6	6
1400	13	13	13	13	13	13	13	13	13	13	13	13	9	9	9	9	9	9	6	6	6	6	6	6
1600	13	13	13	13	13	13	13	13	13	13	13	13	9	9	9	9	9	9	6	6	6	6	6	6
1800	13	13	13	13	13	13	13	13	13	13	13	13	9	9	9	9	9	9	6	6	6	6	6	6
2000	13	13	13	13	13	13	13	13	13	13	13	13	9	9	9	9	9	9	6	6	6	6	6	6
2300	13	13	13	13	13	13	13	13	13	13	13	13	9	9	9	9	9	9	6	6	6	6	6	6
2600	13	13	13	13	13	13	13	13	13	13	13	13	9	9	9	9	9	9	6	6	6	6	6	6
3000	13	13	13	13	13	13	13	13	13	13	13	13	9	9	9	9	9	9	6	6	6	6	6	6

Linear V6 C

	11						21						22						33					
H.	300	400	500	600	700	900	300	400	500	600	700	900	300	400	500	600	700	900	300	400	500	600	700	900
L.																								
400	24	24	24	24	24	24	24	24	24	24	24	20	16	16	16	16	16	16	12	12	12	12	12	12
500	24	24	24	24	24	24	24	24	24	24	24	20	16	16	16	16	16	16	12	12	12	12	12	12
600	13	13	13	13	13	13	13	13	13	13	13	13	9	9	9	9	9	9	6	6	6	6	6	6
700	13	13	13	13	13	13	13	13	13	13	13	13	9	9	9	9	9	9	6	6	6	6	6	6
800	13	13	13	13	13	13	13	13	13	13	13	13	9	9	9	9	9	9	6	6	6	6	6	6
900	13	13	13	13	13	13	13	13	13	13	13	13	9	9	9	9	9	9	6	6	6	6	6	6
1000	13	13	13	13	13	13	13	13	13	13	13	13	9	9	9	9	9	9	6	6	6	6	6	6
1100	13	13	13	13	13	13	13	13	13	13	13	13	9	9	9	9	9	9	6	6	6	6	6	6
1200	13	13	13	13	13	13	13	13	13	13	13	13	9	9	9	9	9	9	6	6	6	6	6	6
1400	13	13	13	13	13	13	13	13	13	13	13	13	9	9	9	9	9	9	6	6	6	6	6	6
1600	13	13	13	13	13	13	13	13	13	13	13	13	9	9	9	9	9	9	6	6	6	6	6	6
1800	13	13	13	13	13	13	13	13	13	13	13	13	9	9	9	9	9	9	6	6	6	6	6	6
2000	13	13	13	13	13	13	13	13	13	13	13	13	9	9	9	9	9	9	6	6	6	6	6	6
2300	13	13	13	13	13	13	13	13	13	13	13	13	9	9	9	9	9	9	6	6	6	6	6	6
2600	13	13	13	13	13	13	13	13	13	13	13	13	9	9	9	9	9	9	6	6	6	6	6	6
3000	13	13	13	13	13	13	13	13	13	13	13	13	9	9	9	9	9	9	6	6	6	6	6	6

Palletizing

Linear C4 Hygiene

	10						20						30					
H.	300	400	500	600	700	900	300	400	500	600	700	900	300	400	500	600	700	900
L.																		
400	24	24	24	24	24	24	24	24	24	24	24	20	12	12	12	12	12	12
500	24	24	24	24	24	24	24	24	24	24	24	20	12	12	12	12	12	12
600	13	13	13	13	13	13	13	13	13	13	13	13	6	6	6	6	6	6
700	13	13	13	13	13	13	13	13	13	13	13	13	6	6	6	6	6	6
800	13	13	13	13	13	13	13	13	13	13	13	13	6	6	6	6	6	6
900	13	13	13	13	13	13	13	13	13	13	13	13	6	6	6	6	6	6
1000	13	13	13	13	13	13	13	13	13	13	13	13	6	6	6	6	6	6
1100	13	13	13	13	13	13	13	13	13	13	13	13	6	6	6	6	6	6
1200	13	13	13	13	13	13	13	13	13	13	13	13	6	6	6	6	6	6
1400	13	13	13	13	13	13	13	13	13	13	13	13	6	6	6	6	6	6
1600	13	13	13	13	13	13	13	13	13	13	13	13	6	6	6	6	6	6
1800	13	13	13	13	13	13	13	13	13	13	13	13	6	6	6	6	6	6
2000	13	13	13	13	13	13	13	13	13	13	13	13	6	6	6	6	6	6
2300	13	13	13	13	13	13	13	13	13	13	13	13	6	6	6	6	6	6
2600	13	13	13	13	13	13	13	13	13	13	13	13	6	6	6	6	6	6
3000	13	13	13	13	13	13	13	13	13	13	13	13	6	6	6	6	6	6

Linear V6 Hygiene

	10						20						30					
H.	300	400	500	600	700	900	300	400	500	600	700	900	300	400	500	600	700	900
L.																		
400	24	24	24	24	24	24	24	24	24	24	24	20	12	12	12	12	12	12
500	24	24	24	24	24	24	24	24	24	24	24	20	12	12	12	12	12	12
600	13	13	13	13	13	13	13	13	13	13	13	13	6	6	6	6	6	6
700	13	13	13	13	13	13	13	13	13	13	13	13	6	6	6	6	6	6
800	13	13	13	13	13	13	13	13	13	13	13	13	6	6	6	6	6	6
900	13	13	13	13	13	13	13	13	13	13	13	13	6	6	6	6	6	6
1000	13	13	13	13	13	13	13	13	13	13	13	13	6	6	6	6	6	6
1100	13	13	13	13	13	13	13	13	13	13	13	13	6	6	6	6	6	6
1200	13	13	13	13	13	13	13	13	13	13	13	13	6	6	6	6	6	6
1400	13	13	13	13	13	13	13	13	13	13	13	13	6	6	6	6	6	6
1600	13	13	13	13	13	13	13	13	13	13	13	13	6	6	6	6	6	6
1800	13	13	13	13	13	13	13	13	13	13	13	13	6	6	6	6	6	6
2000	13	13	13	13	13	13	13	13	13	13	13	13	6	6	6	6	6	6
2300	13	13	13	13	13	13	13	13	13	13	13	13	6	6	6	6	6	6
2600	13	13	13	13	13	13	13	13	13	13	13	13	6	6	6	6	6	6
3000	13	13	13	13	13	13	13	13	13	13	13	13	6	6	6	6	6	6

Palletizing

Linear C6 Vertical

	10						20						21						22					
H.	1400	1600	1800	2000	2200	2400	1400	1600	1800	2000	2200	2400	1400	1600	1800	2000	2200	2400	1400	1600	1800	2000	2200	2400
L.																								
300	15	15	15	15	15	15	15	15	15	15	15	15	15	15	15	15	15	15	10	10	10	10	10	10
400	15	15	15	15	15	15	15	15	15	15	15	15	15	15	15	15	15	15	10	10	10	10	10	10
500	15	15	15	15	15	15	15	15	15	15	15	15	15	15	15	15	15	15	10	10	10	10	10	10
600	15	15	15	15	15	15	15	15	15	15	15	15	15	15	15	15	15	15	10	10	10	10	10	10
700	15	15	15	15	15	15	15	15	15	15	15	15	15	15	15	15	15	15	10	10	10	10	10	10
900	15	15	15	15	15	15	15	15	15	15	15	15	15	15	15	15	15	15	10	10	10	10	10	10

Towel Warmers

Bathroom range

The RADIATORS range of bathroom radiators includes straight and curved towel warmers with round and flat tubes to offer products to satisfy the most diverse tastes.

The appearance of the towel warmers can be modified according to the end user's wishes as the range includes both chromed and coloured versions.

An electrification kit is available for each towel warmer, allowing it to be powered electrically for use either connected to the home's heating system or to the mains electricity supply to produce the warmth required to heat the bathroom quickly and independently.

The range also includes a number of models with central connection. Each bathroom radiator is supplied with an air vent and set of mounting brackets.

Varnishing

The top quality painted finish of RADIATORS towel warmers is created using an industrial process from the automotive sector, giving each element a glossy long-lasting colour.

The colour is the characteristic Radiators RAL 9016 white, complying with DIN 55900.

Certification and compliance marks

CE certified and all heat outputs are measured and certified according to the European EN 442 standard.

Warranty

Thanks to the top quality standards and implementation of automated control systems, RADIATORS is the only company able to guarantee its hydronic products for 15 years.

FANTASIA Linea White

Image for illustrative purposes only

Technical specifications
Material: UNI EN 10130:2007 steel
Straight tubes
Oval manifolds 40 x 30 mm
Maximum working pressure 10 bars
Test pressure 13 bars
Maximum operating temperature 110° C

Code	Height	Width	Pipe centre	Depth	Output Δt 50°C 75/65-20	Output Δt 42,5°C 70/55-20	Output Δt 30°C 55/45-20	Esp.	Weight	Water cont.	Hybrid func.
	H (mm)	L (mm)	I (mm)	(mm)	W	W	W	N.	kg	l	W
0SDRCL017064000	691	400	350	30	261	214	140	1,215	4,5	2,7	300
* 0SDRCL017065000	691	500	450	30	326	266	171	1,258	4,5	3,1	300
0SDRCL012094500	961	450	400	30	385	316	206	1,221	6,6	3,8	400
* 0SDRCL012095000	961	500	450	30	420	344	225	1,221	6,2	4,1	400
0SDRCL012114000	1186	400	350	30	404	331	216	1,223	7,6	4,2	400
* 0SDRCL012114500	1186	450	400	30	466	380	245	1,263	7	4,6	500
* 0SDRCL012115000	1186	500	450	30	512	417	270	1,256	7,6	4,9	500
* 0SDRCL012115500	1186	550	500	30	558	456	295	1,248	8,1	5,2	500
* 0SDRCL012116000	1186	600	550	30	603	493	320	1,241	8,2	5,6	700
0SDRCL012154000	1546	400	350	30	559	458	298	1,234	9,9	5,7	700
* 0SDRCL012154500	1546	450	400	30	640	522	337	1,258	9,4	6,2	700
* 0SDRCL012155000	1546	500	450	30	690	562	363	1,258	10,3	6,7	700
* 0SDRCL012155500	1546	550	500	30	739	602	389	1,258	10,8	7,1	700
* 0SDRCL012156000	1546	600	550	30	789	643	416	1,258	11	7,6	700
0SDRCL012157500	1546	750	700	30	956	781	505	1,250	15,9	8,9	1000
0SDRCL012174000	1726	400	350	30	629	515	335	1,234	11,2	6,8	600
* 0SDRCL012174500	1726	450	400	30	709	578	374	1,252	10,4	7,1	700
* 0SDRCL012175000	1726	500	450	30	774	631	408	1,255	11,6	7,6	700
* 0SDRCL012175500	1726	550	500	30	840	685	442	1,258	12	8,1	1000
* 0SDRCL012176000	1726	600	550	30	906	738	476	1,262	12,3	8,7	1000
0SDRCL012177500	1726	750	700	30	1081	884	575	1,234	18,1	10,5	1000

* = The indicated codes are NF certified

Standard configuration

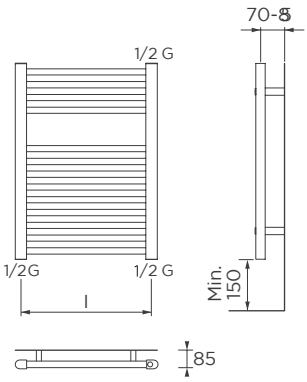

Connections and standard supply:
- 3 x 1/2", connections, internal thread (two perpendicular bottom connections at the base of the manifolds, one perpendicular connection at the top).
- Installation kit including:
- brackets
- 1 x 1/2" vent plug

Dimensions are in millimeters (mm)

FANTASIA Linea Chrome and Anthracite

Image for illustrative purposes only

Technical specifications
Material: UNI EN 10130:2007 steel
Straight tubes
Oval manifolds 40 x 30 mm
Maximum working pressure 10 bars
Test pressure 13 bars
Maximum operating temperature 110° C

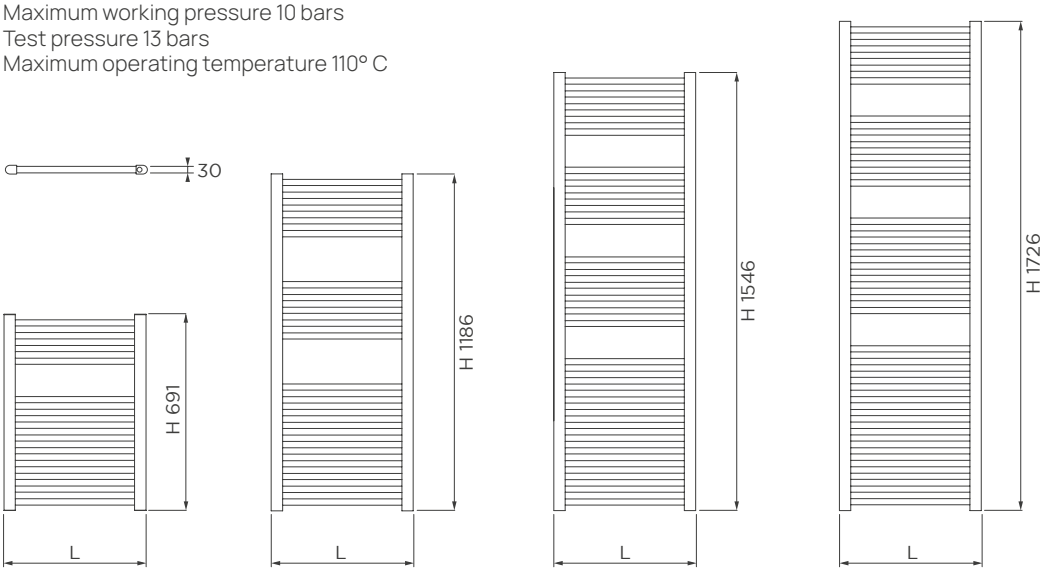

FANTASIA Linea Chrome

Code	Height	Width	Pipe centre	Depth	Output Δt 50°C 75/65-20	Output Δt 42,5°C 70/55-20	Output Δt 30°C 55/45-20	Esp.	Weight	Water cont.	Hybrid func.
	H (mm)	L (mm)	I (mm)	(mm)	W	W	W	N.	kg	l	W
* 0SDRCL117065000	691	500	450	30	213	174	112	1,253	5	3,1	200
* 0SDRCL112115000	1186	500	450	30	352	286	183	1,284	7,5	4,9	300
* 0SDRCL112155000	1546	500	450	30	465	379	244	1,266	10	6,7	400
0SDRCL112156000	1546	600	550	30	520	422	270	1,289	13,4	7,5	500
0SDRCL112175000	1726	500	450	30	507	411	262	1,289	13,2	7,9	400
* 0SDRCL112176000	1726	600	550	30	527	427	273	1,289	11,2	7,6	500

* = The indicated codes are NF certified

FANTASIA Linea Anthracite

Code	Height	Width	Pipe centre	Depth	Output Δt 50°C 75/65-20	Output Δt 42,5°C 70/55-20	Output Δt 30°C 55/45-20	Esp.	Weight	Water cont.	Hybrid func.
	H (mm)	L (mm)	I (mm)	(mm)	W	W	W	N.	kg	l	W
* 0SDRCL317065000	691	500	450	30	326	266	171	1,258	4,5	3,1	300
* 0SDRCL312115000	1186	500	450	30	512	417	270	1,256	7,6	4,9	500
* 0SDRCL312155000	1546	500	450	30	690	562	363	1,258	10,3	6,7	700
* 0SDRCL312156000	1546	600	550	30	789	643	416	1,258	11	7,6	700

* = The indicated codes are NF certified

Standard configuration

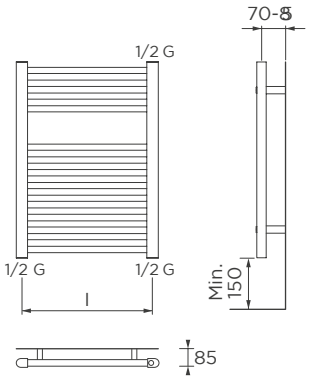

Connections and standard supply:
- 3 x 1/2", connections, internal thread
(two bottom connections perpendicular to the base of the manifolds, one perpendicular connection at the top).
- Installation kit including:
- brackets Anthracite or Chrome
- 1 x 1/2" vent plug

Dimensions are in millimeters (mm)

FANTASIA Linea White - Central connection

Image for illustrative purposes only

Technical specifications
Material: UNI EN 10130:2007 steel
Straight tubes
Oval manifolds 40 x 30 mm
Maximum working pressure 10 bars
Test pressure 13 bars
Maximum operating temperature 110° C

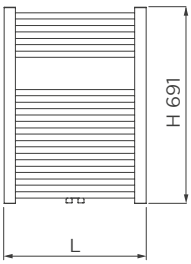

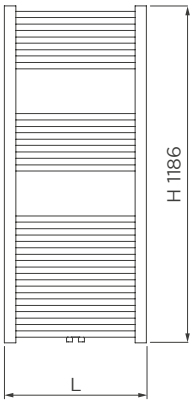

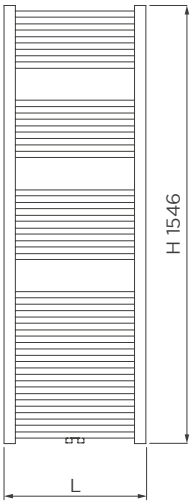

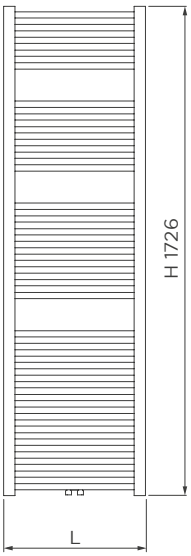

FANTASIA Linea White - Central connection

Code	Height	Width	Pipe centre	Depth	Output Δt 50°C 75/65-20	Output Δt 42,5°C 70/55-20	Output Δt 30°C 55/45-20	Esp.	Weight	Water cont.	Hybrid func.
	H (mm)	L (mm)	I (mm)	(mm)	W	W	W	N.	kg	l	W
0SDRAD017065000	691	500	50	30	311	225	167	1,217	5,3	3,1	300
0SDRAD012115000	1186	500	50	30	481	392	254	1,251	8,6	4,8	500
0SDRAD012155000	1546	500	50	30	673	549	357	1,238	11,6	6,6	700
0SDRAD012156000	1546	600	50	30	786	642	417	1,243	13,4	7,5	700
0SDRAD012175000	1726	500	50	30	758	620	404	1,234	13,2	7,9	700
0SDRAD012176000	1726	600	50	30	887	726	472	1,234	15,2	8,9	1000

Standard configuration

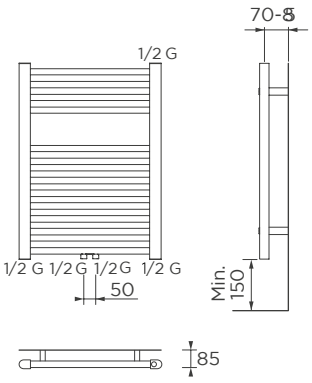

Connections and standard supply:
- 3 x 1/2" connections, internal thread
(two bottom connections, 50 mm pipe centre, one at the top right).
- Installation kit including:
- brackets
- 1 x 1/2" vent plug

Dimensions are in millimeters (mm)

FANTASIA Parentesi White

Image for illustrative purposes only

Technical specifications
Material: UNI EN 10130:2007 steel
Curved tubes
Oval manifolds 40 x 30 mm
Maximum working pressure 10 bars
Test pressure 13 bars
Maximum operating temperature 110° C

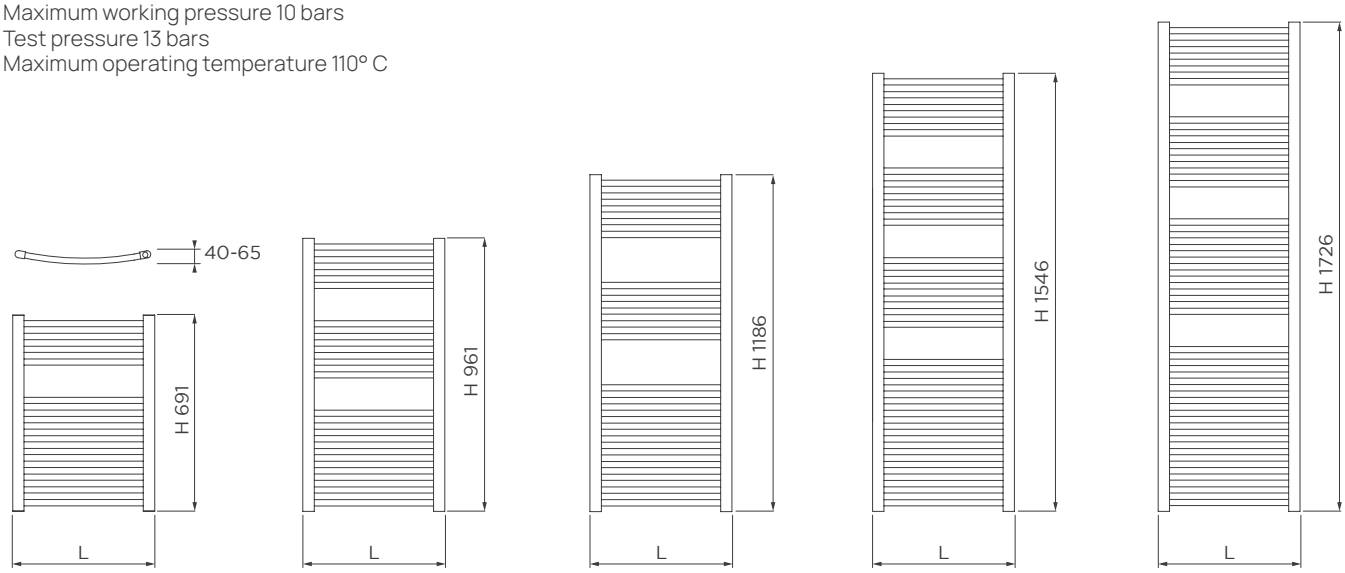

Code	Height	Width	Pipe centre	Depth	Output Δt 50°C 75/65-20	Output Δt 42,5°C 70/55-20	Output Δt 30°C 55/45-20	Esp.	Weight	Water cont.	Hybrid func.
	H (mm)	L (mm)	I (mm)	(mm)	W	W	W	N.	kg	l	W
0SDROL017065000	691	500	450	48	311	255	167	1,217	5,3	3,1	300
0SDROL012115000	1186	500	450	48	481	392	254	1,251	8,6	4,8	500
0SDROL012115500	1186	550	500	54	520	424	274	1,251	9,1	5,1	500
0SDROL012155000	1546	500	450	48	673	549	357	1,238	11,6	6,6	700
0SDROL012156000	1546	600	550	58	786	642	417	1,243	13,4	7,5	700
0SDROL012175000	1726	500	450	48	758	620	404	1,234	13,2	7,9	700
0SDROL012176000	1726	600	550	58	887	726	472	1,234	15,2	8,9	1000

Standard configuration

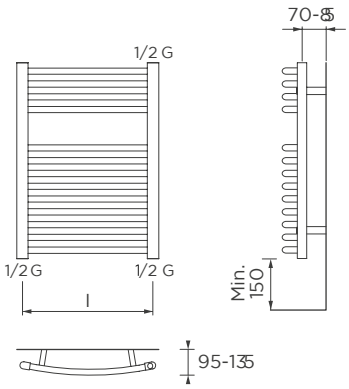

Connections and standard supply:
- 3 x 1/2", connections, internal thread
(two bottom connections perpendicular to the base of the manifolds, one perpendicular connection at the top).
- Installation kit including:
- brackets
- 1 x 1/2" vent plug

Dimensions are in millimeters (mm)

UNIQUE White

Image for illustrative purposes only

Code	Height	Width	Pipe centre	Depth	Output Δt 50°C 75/65-20	Output Δt 42,5°C 70/55-20	Output Δt 30°C 55/45-20	Esp.	Weight	Water cont.	Hybrid func.
	H (mm)	L (mm)	I (mm)	(mm)	W	W	W	N.	kg	l	W
0SDRTD057125800	1280	585	550	35	489	402	261	1,235	8,0	4,3	300
0SDRTD057165800	1690	585	550	35	678	558	365	1,213	9,0	5,6	500
0SDRTD057167300	1690	735	700	35	787	646	419	1,233	10,3	6,5	600

Technical specifications
Material: UNI EN 10130:2007 steel
Round tubes
Round manifolds diameter 35 mm
Maximum working pressure 10 bars
Test pressure 13 bars
Maximum operating temperature 110° C

Connections and standard supply:
- 4 x 1/2" connections, internal thread
(two bottom connections perpendicular to the base of the manifolds, one perpendicular at the top).
- Installation kit including:
- EASY FIT brackets
- 1 x 1/2" vent plug
- 1 x blind plug

Standard configuration

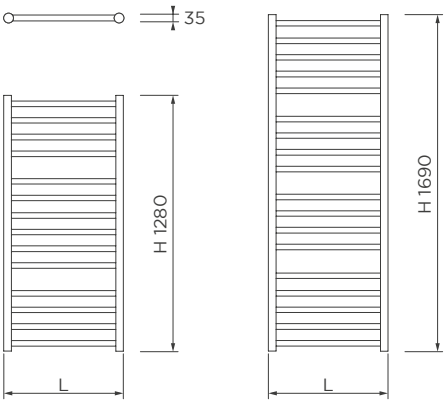

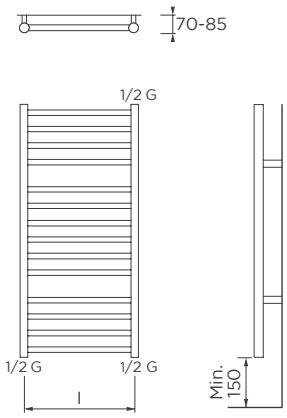

Dimensions are in millimeters (mm)

UNIQUE White

Image for illustrative purposes only

Code	Height	Width	Pipe centre	Depth	Output Δt 50°C 75/65-20	Output Δt 42,5°C 70/55-20	Output Δt 30°C 55/45-20	Esp.	Weight	Water cont.	Hybrid func.
	H (mm)	L (mm)	I (mm)	(mm)	W	W	W	N.	kg	l	W
0SDRTD157125800	1280	585	550	35	330	270	176	1,235	8,0	4,3	300
0SDRTD157165800	1690	585	550	35	457	375	246	1,213	9,0	5,6	500
0SDRTD157167300	1690	735	700	35	531	434	283	1,233	10,3	6,5	600

Technical specifications
Material: UNI EN 10130:2007 steel
Round tubes
Round manifolds diameter 35 mm
Maximum working pressure 10 bars
Test pressure 13 bars
Maximum operating temperature 110° C

Connections and standard supply:
- 4 x 1/2" connections, internal thread
(two bottom connections perpendicular to the base of the manifolds, one perpendicular at the top).
- Installation kit including:
- EASY FIT brackets
- 1 x 1/2" vent plug
- 1 x blind plug

Standard configuration

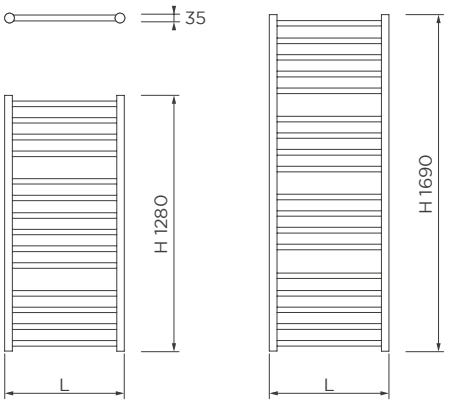

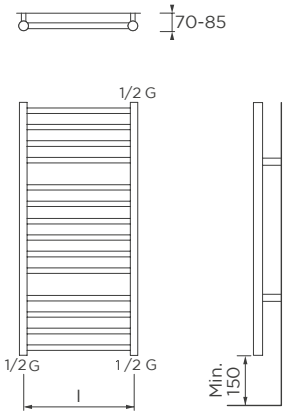

Dimensions are in millimeters (mm)

CORTINA

Image for illustrative purposes only

Code	Height	Width	Pipe centre	Depth	Output Δt 50°C 75/65-20	Output Δt 42,5°C 70/55-20	Output Δt 30°C 55/45-20	Esp.	Weight	Water cont.	Hybrid func.
	H (mm)	L (mm)	I (mm)	(mm)	W	W	W	N.	kg	l	W
0SDRBQ045114800	1198	480	450	30	628	513	332	1,249	10,5	4,8	700
0SDRBQ045144800	1485	480	450	30	807	659	426	1,249	12,5	6,2	1000
0SDRBQ045185800	1731	580	550	30	1162	949	614	1,249	16,2	9,4	1000

Technical specifications
Material: UNI EN 10130:2007 steel
Square tubes
Square manifolds 30 x 30 mm
Maximum working pressure 10 bars
Test pressure 13 bars
Maximum operating temperature 110° C

Connections and standard supply:
- 3 x 1/2", connections, internal thread
(two bottom connections perpendicular to the base of the manifolds, one perpendicular connection at the top).
- Installation kit including:
• brackets
• 1 x 1/2" vent plug
Chromed brackets are available for RALI finishes.

Standard configuration

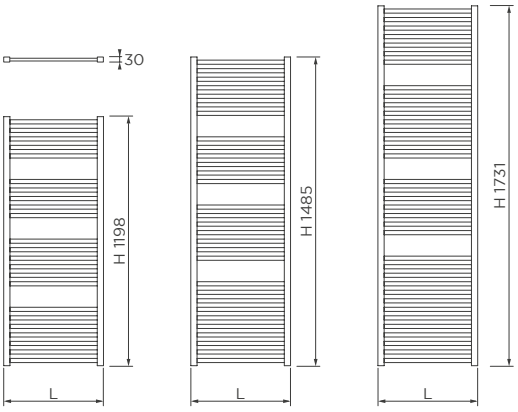

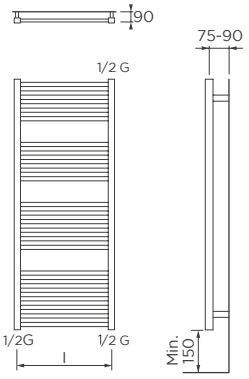

Dimensions are in millimeters (mm)

QUARZO

Image for illustrative purposes only

Code	Height	Width	Pipe centre	Depth	Output Δt 50°C 75/65-20	Output Δt 42,5°C 70/55-20	Output Δt 30°C 55/45-20	Esp.	Weight	Water cont.	Hybrid func.
	H (mm)	L (mm)	I (mm)	(mm)	W	W	W	N.	kg	l	W
0MDRQS096114800	1193	482	450	60	638	525	347	1,250	11,5	6,1	600
0MDRQS096154800	1503	482	450	60	833	680	440	1,250	13,5	7,2	750

For coloured versions, change the seventh digit of the code from "0" to "9"

Technical specifications
Material: UNI EN 10130:2007 steel
Superimposed square tubes
Square manifolds 30 x 30 mm
Maximum working pressure 4 bars
Test pressure 5,2 bars
Maximum operating temperature 110° C

Connections and standard supply:
- 4 x 1/2" connections, internal thread
(two perpendicular bottom connections, at the base of the manifolds, two perpendicular at the top).
- Installation kit including:
• EASY FIT brackets
• 1 x 1/2" vent plug
Chromed brackets are available for RAL finishes.

Standard configuration

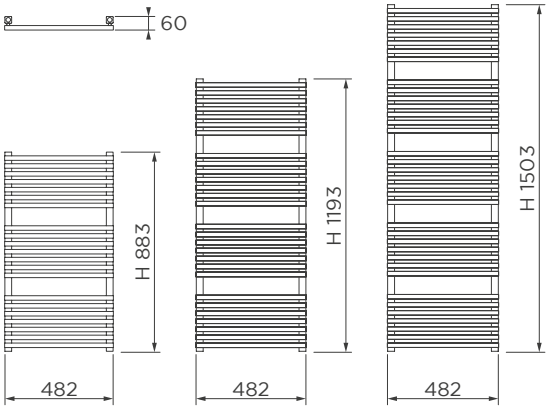

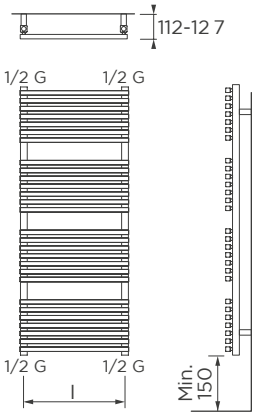

Dimensions are in millimeters (mm)

COBALTO

Image for illustrative purposes only

Code	Height	Width	Pipe centre	Depth	Output Δt 50°C 75/65-20	Output Δt 42,5°C 70/55-20	Output Δt 30°C 55/45-20	Esp.	Weight	Water cont.	Hybrid func.
	H (mm)	L (mm)	I (mm)	(mm)	W	W	W	N.	kg	l	W
0PDRPM063075000	774	500	450	49	383	318	208	1,192	9,5	3,5	400
0PDRPM063105000	1000	500	450	49	481	396	261	1,199	12,9	5,1	500
0PDRPM063135000	1328	500	450	49	629	517	338	1,218	16,3	6,2	700
0PDRPM063165000	1636	500	450	49	777	637	413	1,237	20,1	7,9	1000

For coloured versions, change the seventh digit of the code from "0" to "9"

Technical specifications
Material: UNI EN 10130:2007 steel
Straight flat tubes
Round manifolds diameter 38 mm
Maximum working pressure 4 bars
Test pressure 5,2 bars
Maximum operating temperature 110° C

Connections and standard supply:
- 3 x 1/2", connections, internal thread
(two bottom connections perpendicular to the base of the manifolds, one perpendicular connection at the top).
- Installation kit including:
• brackets
• 1 x 1/2" vent plug
Chromed brackets are available for RAL finishes.

Standard configuration

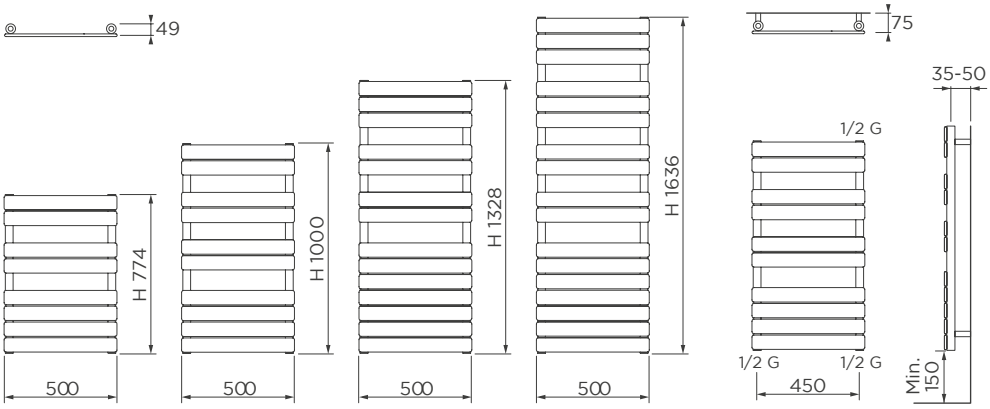

Dimensions are in millimeters (mm)

AGATA

Image for illustrative purposes only

Code	Height	Width	Pipe centre	Depth	Output Δt 50°C 75/65-20	Output Δt 42,5°C 70/55-20	Output Δt 30°C 55/45-20	Esp.	Weight	Water cont.	Hybrid func.
	H (mm)	L (mm)	I (mm)	(mm)	W	W	W	N.	kg	l	W
0PDRTR051115500	1108	550	50	49	592	481	312	1,229	15,0	5,6	700
0PDRTR051145500	1432	550	50	49	733	581	376	1,243	19,5	7,0	700
0PDRTR051175500	1756	550	50	49	894	723	469	1,231	23,1	8,4	1000

For coloured versions, change the seventh digit of the code from "0" to "9"

Technical specifications
Material: UNI EN 10130:2007 steel
Straight flat tubes
Round manifolds diameter 38 mm
Maximum working pressure 4 bars
Test pressure 5,2 bars
Maximum operating temperature 110° C

Connections and standard supply:
- 4 x 1/2" connections, internal thread (two perpendicular bottom connections, 50 mm pipe centre, at the base of the manifolds, two perpendicular at the top).
- Installation kit including:
• brackets
• 1 x 1/2" vent plug
• 1 x blind plug
Chromed brackets are available for RAL finishes.

Standard configuration

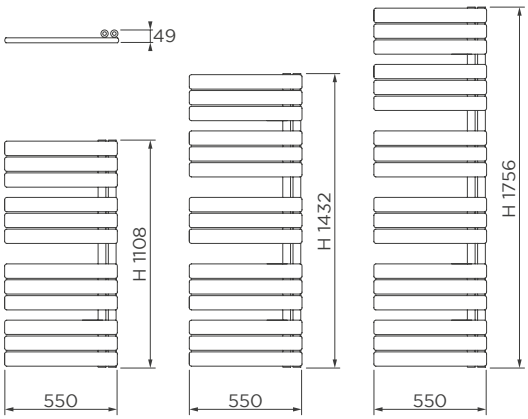

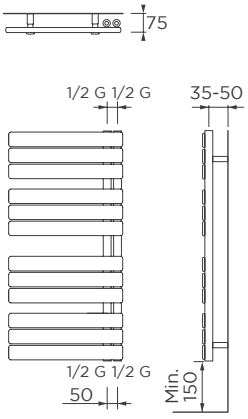

Dimensions are in millimeters (mm)

IRIDIO

Image for illustrative purposes only

Code	Height	Width	Pipe centre	Depth	Output Δt 50°C 75/65-20	Output Δt 42,5°C 70/55-20	Output Δt 30°C 55/45-20	Esp.	Weight	Water cont.	Hybrid func.
	H (mm)	L (mm)	I (mm)	(mm)	W	W	W	N.	kg	l	W
0PDRMM071115000	1110	500	450	56	565	467	305	1,207	9,9	5,5	700
0PDRMM071145000	1438	500	450	56	732	605	397	1.198	12,8	6,9	700
0PDRMM071175000	1725	500	450	56	895	733	476	1,235	15,6	8,6	700

Technical specifications
Material: UNI EN 10130:2007 steel
Straight tubes
Maximum working pressure 4 bars Test pressure 5,2 bars
Maximum operating temperature 110° C

Connections and standard supply:
- 3 x 1/2", connections, internal thread
(two bottom connections perpendicular to the base of the manifolds, one perpendicular connection at the top).
- Installation kit including:
• brackets
• 1 x 1/2" vent plug

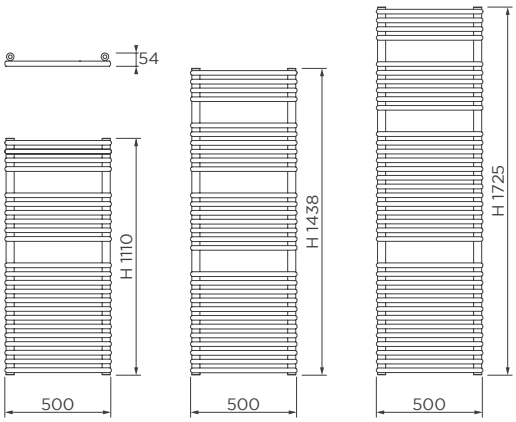

Standard configuration

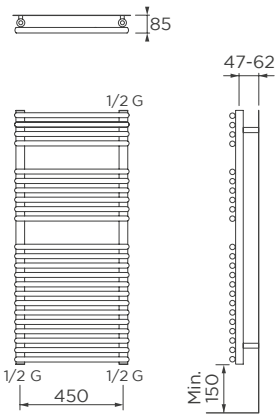

Dimensions are in millimeters (mm)

COSY

Image for illustrative purposes only

Code	Height	Width	Pipe centre	Depth	Output Δt 50°C 75/65-20	Output Δt 42,5°C 70/55-20	Output Δt 30°C 55/45-20	Esp.	Weight	Water cont.	Hybrid func.
	H (mm)	L (mm)	I (mm)	(mm)	W	W	W	N.	kg	l	W
0SDRPI095115000	1135	500	450	30	455	372	240	1,250	8,7	4,8	400

Technical specifications
Material: UNI EN 10130:2007 steel
Straight tubes
Oval manifolds 40 x 30 mm
Maximum working pressure 10 bars
Test pressure 13 bars
Maximum operating temperature 110° C

Connections and standard supply:
- 4 x 1/2" connections, internal thread
(two bottom connections perpendicular to the base of the manifolds, two perpendicular at the top).
- Installation kit including:
- brackets
- 1 x 1/2" vent plug
- 1 x blind plug

Standard configuration

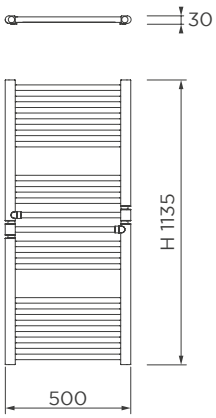

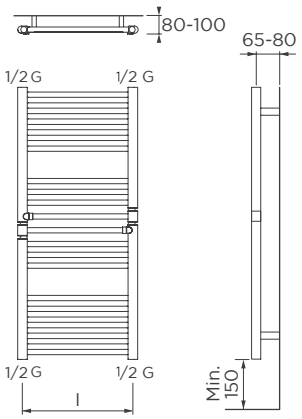

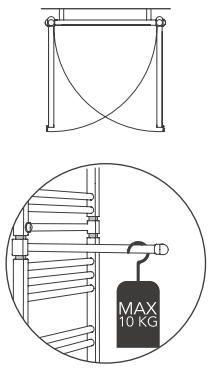

Dimensions are in millimeters (mm)

LOOP

Image for illustrative purposes only

Code	Height	Width	Pipe centre	Depth	Output Δt 50°C 75/65-20	Output Δt 42,5°C 70/55-20	Output Δt 30°C 55/45-20	Esp.	Weight	Water cont.	Hybrid func.
	H (mm)	L (mm)	I (mm)	(mm)	W	W	W	N.	kg	l	W
0SDRAENB1115800	1240	550	400	50	440	361	236	1,216	10,6	5,0	-

SUPPLIED AS STANDARD IN MATT WHITE - RAL 9003 MATT
For coloured versions, change the seventh digit of the code from "N" to "9"

Technical specifications
Material: UNI EN 10130:2007 steel
Round tubes
Maximum working pressure 8 bars
Test pressure 10 bars
Maximum operating temperature 110° C

Connections and standard supply:
- 2 x 1/2" connections, internal thread
(two perpendicular bottom connections at the base of the manifolds).
- Installation kit including:
• EASY FIT brackets
Chromed brackets are available for RAL finishes.

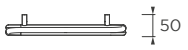

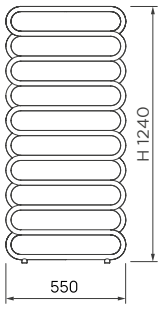

Standard configuration

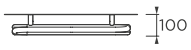

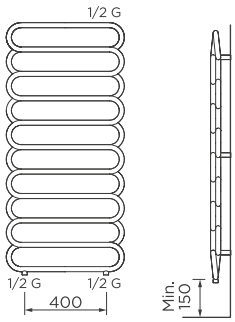

Dimensions are in millimeters (mm)

SHADE

Image for illustrative purposes only

Code	Height	Width	Pipe centre	Depth	Output Δt 50°C 75/65-20	Output Δt 42,5°C 70/55-20	Output Δt 30°C 55/45-20	Esp.	Weight	Water cont.	Hybrid func.
	H (mm)	L (mm)	I (mm)	(mm)	W	W	W	N.	kg	l	W
0PDRSA0A9125000	1243	500	450	108	865	701	445	1,290	21,9	8,7	1000

Technical specifications
Straight flat tubes
Round manifolds diameter 38 mm
Maximum working pressure 4 bars
Test pressure 5,2 bars
Maximum operating temperature 110° C

Connections and standard supply:
- 4 x 1/2" connections, internal thread
(two bottom connections perpendicular to the base of the manifolds, two perpendicular at the top).
- Installation kit including:
• EASY FIT brackets
• 1 x 1/2" vent plug

Standard configuration

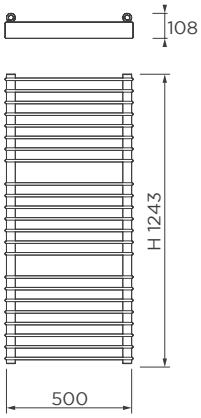

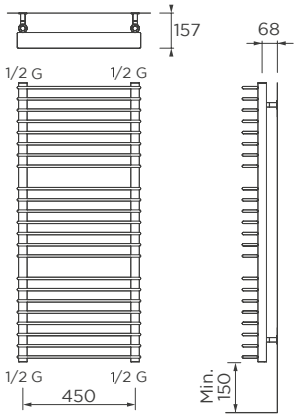

Dimensions are in millimeters (mm)

SLASH

Image for illustrative purposes only

Code	Height	Width	Pipe centre	Depth	Output Δt 50°C 75/65-20	Output Δt 42,5°C 70/55-20	Output Δt 30°C 55/45-20	Esp.	Weight	Water cont.	Hybrid func.
	H (mm)	L (mm)	I (mm)	(mm)	W	W	W	N.	kg	l	W
0SDRAGNB2124800	1250	525	450	56	693	566	366	1,249	13	6,3	700

SUPPLIED AS STANDARD IN MATT WHITE - RAL 9003 MATT
For coloured versions, change the seventh digit of the code from "N" to "9"

Technical specifications
Material: UNI EN 10130:2007 steel
Straight tubes
Round manifolds diameter 38 mm
Maximum working pressure 8 bars
Test pressure 10 bars
Maximum operating temperature 110° C

Connections and standard supply:
- 2 x 1/2" connections, internal thread
(two bottom connections perpendicular to the base of the manifolds).
- Installation kit including:
• EASY FIT brackets

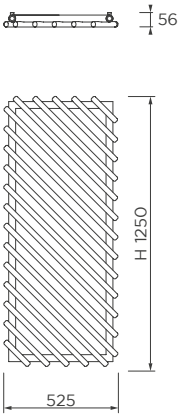

Standard configuration

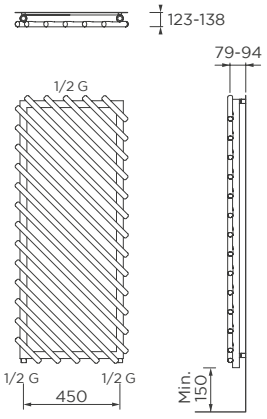

Dimensions are in millimeters (mm)

DL RADIATORS

EASY FIT

WINNER Bianco

Image for illustrative purposes only

Code	Height	Width	Pipe centre	Depth	Output Δt 50°C 75/65-20	Output Δt 42,5°C 70/55-20	Output Δt 30°C 55/45-20	Esp.	Weight	Water cont.	Hybrid func.
	H (mm)	L (mm)	I (mm)	(mm)	W	W	W	N.	kg	l	W
* 0SDRFO055085000	886	500	450	30	398	327	214	1,210	10,1	2,7	400
* 0SDRFO055125000	1252	500	450	30	552	455	284	1,190	13,6	3,7	600

* = The indicated codes are NF certified

Technical specifications
Material: UNI EN 10130:2007 steel
Straight flat tubes
Oval manifolds 40 x 30 mm
Maximum working pressure 4 bars
Test pressure 5,2 bars
Maximum operating temperature 110° C

Connections and standard supply:
- 3 x 1/2", connections, internal thread
(two bottom connections perpendicular to the base of the manifolds, one perpendicular connection at the top).
- Installation kit including:
• brackets
• 1 x 1/2" vent plug

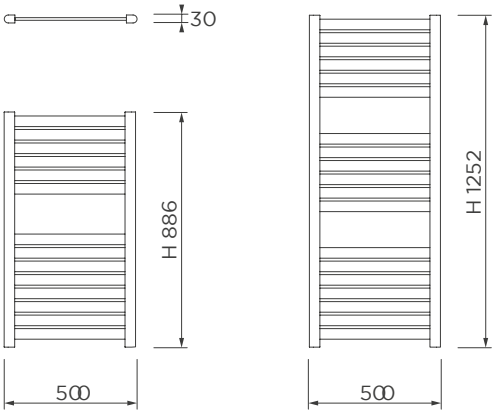

Standard configuration

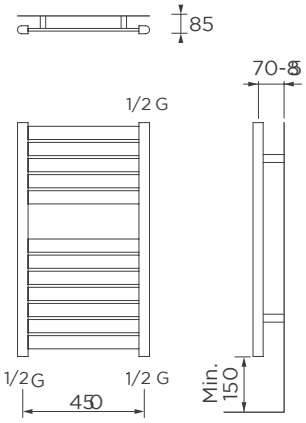

Dimensions are in millimeters (mm)

STRING Bianco

Image for illustrative purposes only

Code	Height	Width	Pipe centre	Depth	Output Δt 50°C 75/65-20	Output Δt 42,5°C 70/55-20	Output Δt 30°C 55/45-20	Esp.	Weight	Water cont.	Hybrid func.
	H (mm)	L (mm)	I (mm)	(mm)	W	W	W	N.	kg	l	W
0PDRMM0B4115000	1077	500	450	52	475	389	253	1,233	9,0	4,5	500

SUPPLIED AS STANDARD IN MATT WHITE - RAL 9003 MATT
For coloured versions, change the seventh digit of the code from "0" to "9"

Technical specifications
Material: UNI EN 10130:2007 steel
Straight tubes
Round manifolds diameter 38 mm
Maximum working pressure 8 bars
Test pressure 10 bars
Maximum operating temperature 110° C

Connections and standard supply:
- 3 x 1/2", connections, internal thread
(two bottom connections perpendicular to the base of the manifolds, one perpendicular connection at the top).
- Installation kit including:
• EASY FIT brackets
• 1 x 1/2" vent plug
Chromed brackets are available for RAL finishes.

Standard configuration

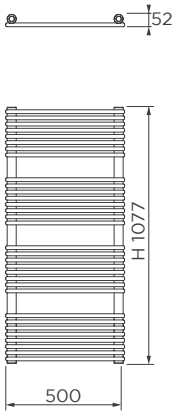

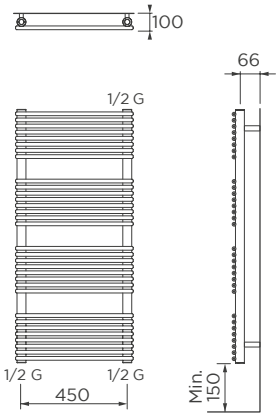

Dimensions are in millimeters (mm)

DL RADIATORS

EASY FIT

Note

Design

Design range

The RADIATORS range of Design radiators includes radiators such as Mirò and Monocolonna with a style both classic and at the same time simple, enabling them to fit in perfectly in rooms with a modern décor. They are supplied with the plugs and bracket kits required for installation.

Innovation

RADIATORS Design radiators are conceived to become protagonists in your home. Distinctive elements characterised by shapes and colours that fit perfectly into both classic and modern spaces to meet the needs of the most demanding consumers. Heating appliances offering a combination of heat output and style. All Design radiators undergo stringent quality controls to guarantee the supply of mechanically safe products complying with the strictest European standards.

Varnishing

The top quality painted finish of RADIATORS towel warmers is created using an industrial process from the automotive sector, giving each element a glossy long-lasting colour.

The colour is the characteristic RADIATORS RAL 9016 white. Complying with DIN 55900.

Certification and compliance marks

CE certified and all heat outputs are measured and certified according to the European EN 442 standard.

Warranty

Thanks to the top quality standards and implementation of automated control systems, RADIATORS is the only company able to guarantee its hydronic products for 15 years.

GATE

Image for illustrative purposes only

Technical specifications
Material: UNI EN 10130:2007 steel
Straight flat tubes 70x11 mm
Round manifolds diameter 38 mm
Maximum working pressure 4 bars
Test pressure 5,2 bars
Maximum operating temperature 110° C

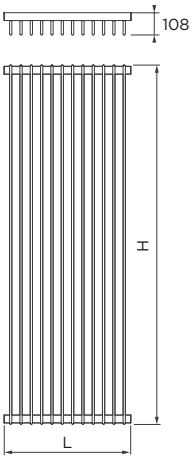

Dimensions are in millimeters (mm)

Code	Height	Width	Pipe centre	Pipe centre	Depth	Nr. flat tubes	Output Δt 50°C 75/65-20	Output Δt 42,5°C 70/55-20	Output Δt 30°C 55/45-20	Esp.	Weight	Water cont.
	H (mm)	L (mm)	I1(mm)	I2(mm)	(mm)	N.	W	W	W	N.	kg	l
0PDRMI0A9051200	550	611	500	520	108	12	490	395	250	1,32	12,4	4,8
0PDRMI0A9051600	550	811	500	720	108	16	653	526	333	1,32	16,4	6,4
0PDRMI0A9052000	550	1011	500	920	108	20	816	658	416	1,32	20,5	8,0
0PDRMI0A9052400	550	1211	500	1120	108	24	979	790	499	1,32	24,6	9,6
0PDRMI0A9052800	550	1411	500	1320	108	28	1142	921	582	1,32	28,7	11,1
0PDRMI0A9061200	650	611	600	520	108	12	567	458	289	1,32	14,3	5,4
0PDRMI0A9061600	650	811	600	720	108	16	757	610	385	1,32	19,0	7,2
0PDRMI0A9062000	650	1011	600	920	108	20	946	763	481	1,32	23,7	9,1
0PDRMI0A9062400	650	1211	600	1120	108	24	1135	915	578	1,32	28,4	10,9
0PDRMI0A9062800	650	1411	600	1320	108	28	1324	1068	674	1,32	33,2	12,7
0PDRMI0A9150800	1500	411	1450	334	108	8	820	661	418	1,32	20,5	7,4
0PDRMI0A9151000	1500	511	1450	434	108	10	1025	827	523	1,32	25,6	9,2
0PDRMI0A9151200	1500	611	1450	534	108	12	1230	992	627	1,32	30,6	11,0
0PDRMI0A9170800	1740	411	1690	334	108	8	945	762	481	1,32	23,6	8,5
0PDRMI0A9171000	1740	511	1690	434	108	10	1181	953	602	1,32	29,4	10,5
0PDRMI0A9171200	1740	611	1690	534	108	12	1417	1143	722	1,32	35,3	12,6
0PDRMI0A9200800	2000	411	1950	334	108	8	1079	871	550	1,32	27,0	9,6
0PDRMI0A9201000	2000	511	1950	434	108	10	1349	1089	688	1,32	33,6	12,0
0PDRMI0A9201200	2000	611	1950	534	108	12	1619	1307	825	1,32	40,3	14,3

Technical Connections and standard supply:
- 6 x 1/2" connections, internal thread
- Installation kit including:
  - brackets
  - 1 x 1/2" vent plug supplied as standard.
  - 3 x 1/2" blind plugs supplied as standard.

Configurations

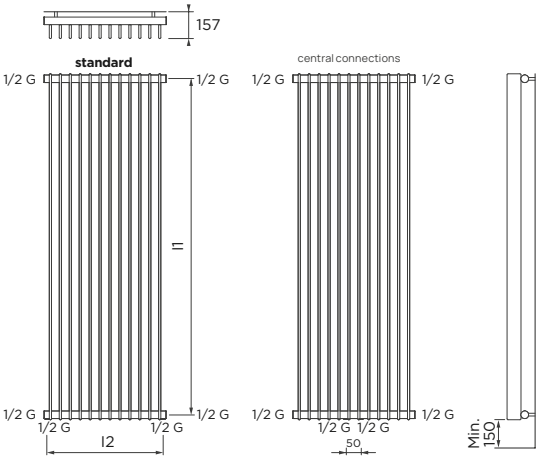

Dimensions are in millimeters (mm)

MIRÒ 10 Horizontal

Image for illustrative purposes only

Technical specifications
Material: UNI EN 10130:2007 steel
Straight flat tubes 70x11 mm
Round manifolds diameter 38 mm
Maximum working pressure 4,5 bars
Test pressure 5,2 bars
Maximum operating temperature 110° C

Technical Connections and standard supply:
- 6 x 1/2" connections, internal thread
- Installation kit including:
- brackets
- 1 x 1/2" vent plug supplied as standard.
- 3 x 1/2" blind plugs supplied as standard.

Chromed brackets are available for RAL finishes.

Standard Configuration

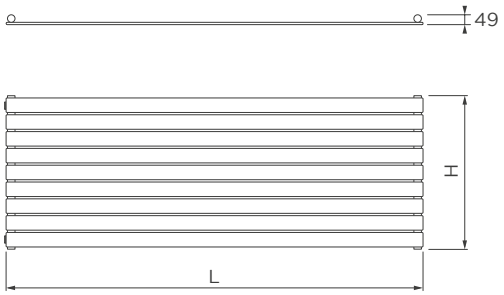

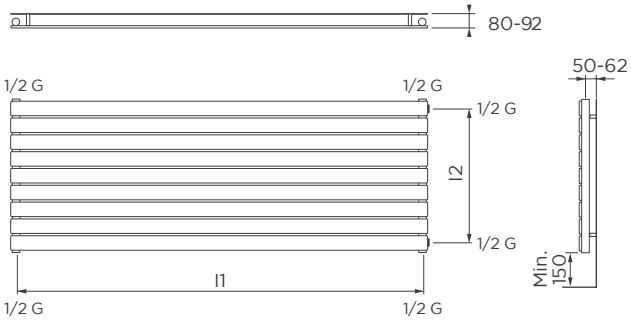

Dimensions are in millimeters (mm)

Code	Height	Width	Pipe centre	Pipe centre	Depth	Nr. flat tubes	Output Δt 50°C 75/65-20	Output Δt 42,5°C 70/55-20	Output Δt 30°C 55/45-20	Esp.	Weight	Water cont.
	H (mm)	L (mm)	I1(mm)	I2(mm)	(mm)	N.	W	W	W	N.	kg	l
0PDRRM089100400	305	1000	950	255	49	4	354	289	188	1,24	8,4	1,9
0PDRRM089180400	305	1740	1690	255	49	4	667	543	350	1,26	14,4	3,2
0PDRRM089200400	305	2000	1950	255	49	4	766	624	403	1,26	16,0	3,5
0PDRRM089100500	380	1000	950	300	49	5	427	349	227	1,23	10,5	2,4
0PDRRM089180500	380	1740	1690	300	49	5	743	608	395	1,23	18,0	4,0
0PDRRM089200500	380	2000	1950	300	49	5	853	698	454	1,23	20,0	4,4
0PDRRM089100600	455	1000	950	375	49	6	499	408	266	1,23	12,6	2,9
0PDRRM089180600	455	1740	1690	375	49	6	867	710	463	1,23	21,6	4,8
0PDRRM089200600	455	2000	1950	375	49	6	997	817	532	1,23	24,0	5,3
0PDRRM089100700	530	1000	950	450	49	7	569	517	305	1,25	14,7	3,4
0PDRRM089180700	530	1740	1690	450	49	7	1102	900	582	1,25	25,2	5,6
0PDRRM089200700	530	2000	1950	450	49	7	1267	1034	669	1,25	28,0	6,2
0PDRRM089060800	605	600	550	525	49	8	384	315	206	1,22	11,2	2,6
0PDRRM089080800	605	800	750	525	49	8	512	420	275	1,22	14,4	3,2
0PDRRM089100800	605	1000	950	525	49	8	640	525	344	1,22	16,8	3,8
0PDRRM089180800	605	1740	1690	525	49	8	1113	913	598	1,22	28,8	6,4
0PDRRM089200800	605	2000	1950	525	49	8	1279	1050	687	1,22	32,0	7,0
0PDRRM089060900	680	600	550	600	49	9	426	350	229	1,21	12,6	2,9
0PDRRM089080900	680	800	750	600	49	9	568	466	306	1,21	16,2	3,6
0PDRRM089100900	680	1000	950	600	49	9	710	583	382	1,21	18,9	4,3
0PDRRM089180900	680	1740	1690	600	49	9	1235	1014	665	1,21	32,4	7,2
0PDRRM089200900	680	2000	1950	600	49	9	1419	1165	764	1,21	36,0	7,9
0PDRRM089061000	755	600	550	675	49	10	468	384	251	1,22	14,0	3,2
0PDRRM089081000	755	800	750	675	49	10	623	512	335	1,22	18,0	4,0
0PDRRM089101000	755	1000	950	675	49	10	779	419	419	1,22	21,0	4,8
0PDRRM089181000	755	1740	1690	675	49	10	1356	1113	728	1,22	36,0	8,0
0PDRRM089201000	755	2000	1950	675	49	10	1559	1279	837	1,22	40,0	8,8
0PDRRM089061100	830	600	550	750	49	11	509	418	273	1,22	15,4	3,5
0PDRRM089081100	830	800	750	750	49	11	679	557	364	1,22	19,8	4,4
0PDRRM089101100	830	1000	950	750	49	11	849	696	455	1,22	23,1	5,3
0PDRRM089181100	830	1740	1690	750	49	11	1477	1211	791	1,22	39,6	8,8
0PDRRM089201100	830	2000	1950	750	49	11	1698	1392	910	1,22	44,0	9,7
0PDRRM089061200	905	600	550	825	49	12	551	452	295	1,23	16,8	3,8
0PDRRM089081200	905	800	750	825	49	12	735	602	393	1,23	21,6	4,8
0PDRRM089201200	905	2000	1950	825	49	12	1838	1505	982	1,23	48,0	10,6
0PDRRM089061300	980	600	550	900	49	13	593	486	316	1,23	18,2	4,1
0PDRRM089081300	980	800	750	900	49	13	791	647	421	1,23	23,4	5,2
0PDRRM089201300	980	2000	1950	900	49	13	1978	1619	1054	1,23	52,0	11,5
0PDRRM089061400	1050	600	550	970	49	14	635	520	338	1,24	19,6	4,5
0PDRRM089081400	1050	800	750	970	49	14	847	693	450	1,24	25,2	5,6
0PDRRM089061500	1125	600	550	1045	49	15	678	554	359	1,24	21,0	4,8
0PDRRM089081500	1125	800	750	1045	49	15	904	738	479	1,24	27,0	6,0
0PDRRM089061600	1205	600	550	1125	49	16	720	588	380	1,25	22,4	5,1
0PDRRM089081600	1205	800	750	1125	49	16	960	784	507	1,25	28,8	6,4
0PDRRM089061700	1280	600	550	1200	49	17	763	622	401	1,26	23,8	5,4
0PDRRM089081700	1280	800	750	1200	49	17	1017	829	535	1,26	30,6	6,8
0PDRRM089061800	1355	600	550	1275	49	18	806	656	423	1,26	25,2	5,8
0PDRRM089061900	1430	600	550	1350	49	19	849	691	444	1,27	26,6	6,1

For coloured versions, change the seventh digit of the code from "0" to "9"

MIRÒ 10 Vertical

Image for illustrative purposes only

Technical specifications
Material: UNI EN 10130:2007 steel
Straight flat tubes 70x11 mm
Round manifolds diameter 38 mm
Maximum working pressure 4,5 bars
Test pressure 5,2 bars
Maximum operating temperature 110° C

Technical Connections and standard supply:
- 6 x 1/2" connections, internal thread
- Installation kit including:
  - brackets
  - 1 x 1/2" vent plug supplied as standard.
  - 3 x 1/2" blind plugs supplied as standard

Chromed brackets are available for RAL finishes.

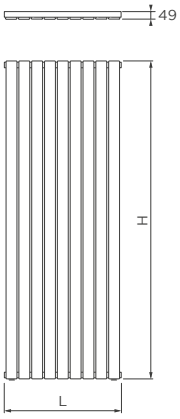

Dimensions are in millimeters (mm)

Configurations

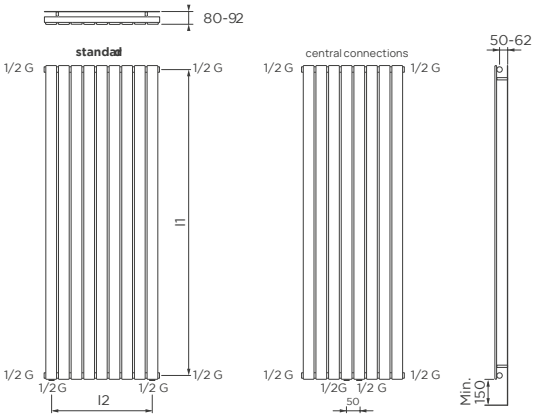

Code	Height	Width	Pipe centre	Pipe centre	Depth	Nr. flat tubes	Output Δt 50°C 75/65-20	Output Δt 42,5°C 70/55-20	Output Δt 30°C 55/45-20	Esp.	Weight	Water cont.
	H (mm)	L (mm)	I1(mm)	I2(mm)	(mm)	N.	W	W	W	N.	kg	l
0PDRxx089060800	600	605	550	525	49	8	426	345	220	1,29	11,2	2,6
0PDRxx089060900	600	680	550	600	49	9	480	388	248	1,29	12,6	2,9
0PDRxx089061000	600	755	550	675	49	10	533	432	275	1,29	14,0	3,2
0PDRxx089061100	600	830	550	750	49	11	586	475	303	1,29	15,4	3,5
0PDRxx089061200	600	905	550	825	49	12	640	518	330	1,29	16,8	3,8
0PDRxx089061300	600	980	550	900	49	13	693	561	358	1,29	18,2	4,1
0PDRxx089061400	600	1050	550	970	49	14	746	604	385	1,29	19,6	4,5
0PDRxx089061500	600	1125	550	1045	49	15	800	647	413	1,29	21,0	4,8
0PDRxx089061600	600	1205	550	1125	49	16	853	690	440	1,29	22,4	5,1
0PDRxx089061700	600	1280	550	1200	49	17	906	734	468	1,29	23,8	5,4
0PDRxx089061800	600	1355	550	1275	49	18	959	777	495	1,29	25,2	5,8
0PDRxx089061900	600	1430	550	1350	49	19	1013	820	523	1,29	27,0	6,0
0PDRxx089080800	800	605	750	525	49	8	561	455	290	1,29	14,4	3,2
0PDRxx089080900	800	680	750	600	49	9	631	512	326	1,29	16,2	3,6
0PDRxx089081000	800	755	750	675	49	10	701	569	362	1,29	18,0	4,0
0PDRxx089081100	800	830	750	750	49	11	771	625	398	1,29	19,8	4,4
0PDRxx089081200	800	905	750	825	49	12	841	682	434	1,29	21,6	4,8
0PDRxx089081300	800	980	750	900	49	13	911	739	471	1,29	23,4	5,2
0PDRxx089081400	800	1050	750	970	49	14	981	796	507	1,29	25,2	5,6
0PDRxx089081500	800	1125	750	1045	49	15	1052	853	543	1,29	27,0	6,0
0PDRxx089081600	800	1205	750	1125	49	16	1122	910	579	1,29	28,8	6,4
0PDRxx089081700	800	1280	750	1200	49	17	1192	966	615	1,29	31,0	7,0
0PDRxx089100400	1000	305	950	225	49	4	347	281	179	1,29	8,4	1,9
0PDRxx089100500	1000	380	950	300	49	5	434	352	224	1,29	10,5	2,4
0PDRxx089100600	1000	455	950	375	49	6	521	422	269	1,29	12,6	2,9
0PDRxx089100700	1000	530	950	450	49	7	608	492	314	1,29	14,7	3,4
0PDRxx089100800	1000	605	950	525	49	8	694	562	358	1,29	16,8	3,8
0PDRxx089100900	1000	680	950	600	49	9	781	633	403	1,29	18,9	4,3
0PDRxx089101000	1000	755	950	675	49	10	868	703	448	1,29	21,0	4,8
0PDRxx089101100	1000	830	950	750	49	11	955	773	493	1,29	23,0	5,0
0PDRxx089180400	1740	305	1690	225	49	4	604	485	313	1,25	14,4	3,2
0PDRxx089180500	1740	380	1690	300	49	5	755	606	391	1,25	18,0	4,0
0PDRxx089180600	1740	455	1690	375	49	6	906	728	469	1,25	21,6	4,8
0PDRxx089180700	1740	530	1690	450	49	7	1057	849	547	1,25	25,2	5,6
0PDRxx089180800	1740	605	1690	525	49	8	1208	970	625	1,25	28,8	6,4
0PDRxx089180900	1740	680	1690	600	49	9	1359	1091	703	1,25	32,4	7,2
0PDRxx089181000	1740	755	1690	675	49	10	1510	1213	782	1,25	36,0	8,0
0PDRxx089181100	1740	830	1690	750	49	11	1661	1334	860	1,25	40,0	9,0
0PDRxx089200400	2000	305	1950	225	49	4	667	540	345	1,28	16,0	3,5
0PDRxx089200500	2000	380	1950	300	49	5	834	675	432	1,28	20,0	4,4
0PDRxx089200600	2000	455	1950	375	49	6	1000	810	518	1,28	24,0	5,3
0PDRxx089200700	2000	530	1950	450	49	7	1167	945	604	1,28	28,0	6,2
0PDRxx089200800	2000	605	1950	525	49	8	1334	1080	690	1,28	32,0	7,0
0PDRxx089200900	2000	680	1950	600	49	9	1500	1215	777	1,28	36,0	7,9
0PDRxx089201000	2000	755	1950	675	49	10	1667	1350	863	1,28	40,0	8,8
0PDRxx089201100	2000	830	1950	750	49	11	1834	1485	949	1,28	44,0	9,7
0PDRxx089201200	2000	905	1950	825	49	12	2000	1620	1036	1,28	48,0	10,6
0PDRxx089201300	2000	980	1950	900	49	13	2167	1755	1122	1,28	52,0	11,0

xx = RM = standard connections
xx = RC = central connections, 50 mm pipe centre, available only for models with even number of elements.
For coloured versions, change the seventh digit of the code from "0" to "9"

MIRÒ 20 Horizontal

Image for illustrative purposes only

Technical specifications
Material: UNI EN 10130:2007 steel
Straight flat tubes 70x11 mm
Round manifolds diameter 38 mm
Maximum working pressure 8 bars
Test pressure 5,2 bars
Maximum operating temperature 110° C

Technical Connections and standard supply:
- 6 x 1/2" connections, internal thread
- Installation kit including:
  - brackets
  - 1 x 1/2" vent plug supplied as standard.
  - 3 x 1/2" blind plugs supplied as standard.

Anthracite brackets are available for RAL finishes.

Standard Configuration

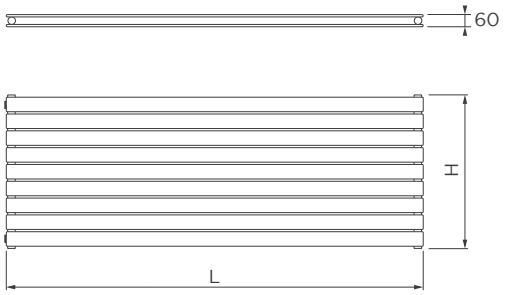

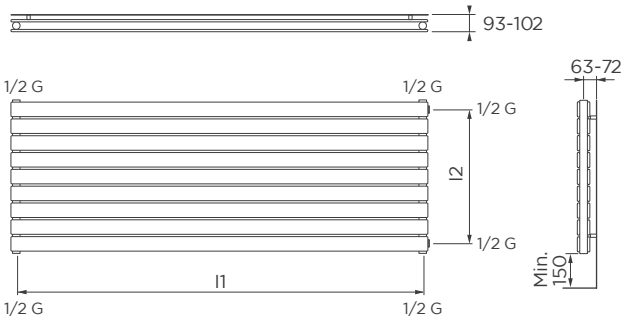

Dimensions are in millimeters (mm)

Code	Height	Width	Pipe centre	Pipe centre	Depth	Nr. flat tubes	Output Δt 50°C 75/65-20	Output Δt 42,5°C 70/55-20	Output Δt 30°C 55/45-20	Esp.	Weight	Water cont.
	H (mm)	L (mm)	I1(mm)	I2(mm)	(mm)	N.	W	W	W	N.	kg	l
0PDRRB089100400	305	1000	950	255	60	4	594	450	314	1,25	20,8	4,6
0PDRRB089180400	305	1740	1690	255	60	4	1069	809	564	1,25	26,0	5,8
0PDRRB089200400	305	2000	1950	255	60	4	1188	898	626	1,25	31,2	7,0
0PDRRB089100500	380	1000	950	300	60	5	743	563	393	1,25	26,0	5,8
0PDRRB089180500	380	1740	1690	300	60	5	1336	1011	7005	1,25	32,5	7,3
0PDRRB089200500	380	2000	1950	300	60	5	1485	1123	783	1,25	39,0	8,8
0PDRRB089100600	455	1000	950	375	60	6	828	626	436	1,26	36,4	8,1
0PDRRB089180600	455	1740	1690	375	60	6	1490	1125	784	1,26	41,6	9,3
0PDRRB089200600	455	2000	1950	375	60	6	1656	1250	870	1,26	46,8	10,4
0PDRRB089100700	530	1000	950	450	60	7	966	730	509	1,26	42,5	9,5
0PDRRB089180700	530	1740	1690	450	60	7	1738	1313	915	1,26	48,5	10,9
0PDRRB089200700	530	2000	1950	450	60	7	1932	1458	1015	1,26	54,6	12,1
0PDRRB089060800	605	600	550	525	60	8	631	478	333	1,25	25,6	5,8
0PDRRB089080800	605	800	750	525	60	8	841	636	444	1,25	32,0	7,2
0PDRRB089100800	605	1000	950	525	60	8	1051	795	554	1,25	38,4	8,6
0PDRRB089180800	605	1740	1690	525	60	8	1892	1430	997	1,26	44,8	10,1
0PDRRB089200800	605	2000	1950	525	60	8	2102	1588	1105	1,26	51,2	11,5
0PDRRB089060900	680	600	550	600	60	9	710	538	375	1,26	28,8	6,5
0PDRRB089080900	680	800	750	600	60	9	946	716	500	1,26	36,0	8,1
0PDRRB089100900	680	1000	950	600	60	9	1182	894	623	1,26	43,2	9,7
0PDRRB089180900	680	1740	1690	600	60	9	2129	1609	1122	1,26	50,4	11,4
0PDRRB089200900	680	2000	1950	600	60	9	2365	1787	1243	1,26	57,6	12,9
0PDRRB089061000	755	600	550	675	60	10	760	576	402	1,25	15,2	3,4
0PDRRB089081000	755	800	750	675	60	10	1014	768	536	1,25	22,8	5,2
0PDRRB089101000	755	1000	950	675	60	10	1267	959	669	1,25	30,4	6,9
0PDRRB089181000	755	1740	1690	675	60	10	2281	1725	1204	1,25	38,0	8,6
0PDRRB089201000	755	2000	1950	675	60	10	2534	1919	1342	1,25	26,0	5,8
0PDRRB089061100	830	600	550	750	60	11	836	634	442	1,25	16,7	3,7
0PDRRB089081100	830	800	750	750	60	11	1115	845	590	1,25	25,1	5,7
0PDRRB089101100	830	1000	950	750	60	11	1394	1055	736	1,25	33,4	7,6
0PDRRB089181100	830	1740	1690	750	60	11	2509	1898	1324	1,25	41,8	9,5
0PDRRB089201100	830	2000	1950	750	60	11	2787	2111	1476	1,25	28,6	6,4
0PDRRB089061200	905	600	550	825	60	12	887	672	469	1,25	39,0	8,8
0PDRRB089081200	905	800	750	825	60	12	1183	895	625	1,25	52,0	11,7
0PDRRB089201200	905	2000	1950	825	60	12	2958	2238	1561	1,25	65,0	14,6
0PDRRB089061300	980	600	550	900	60	13	961	728	508	1,25	42,3	9,5
0PDRRB089081300	980	800	750	900	60	13	1282	970	677	1,25	56,3	12,7
0PDRRB089201300	980	2000	1950	900	60	13	3205	2425	1691	1,25	70,4	15,8
0PDRRB089061400	1050	600	550	970	60	14	1012	767	536	1,25	29,2	6,4
0PDRRB089081400	1050	800	750	970	60	14	1350	1022	714	1,25	43,8	9,7
0PDRRB089061500	1125	600	550	1045	60	15	1084	822	574	1,25	31,3	6,9
0PDRRB089081500	1125	800	750	1045	60	15	1446	1095	765	1,25	46,9	10,4
0PDRRB089061600	1205	600	550	1125	60	16	1136	860	600	1,25	58,4	12,9
0PDRRB089081600	1205	800	750	1125	60	16	1514	1145	799	1,25	73,0	16,1
0PDRRB089061700	1280	600	550	1200	60	17	1207	914	638	1,25	62,1	13,7
0PDRRB089081700	1280	800	750	1200	60	17	1609	1217	849	1,25	77,6	17,1
0PDRRB089061800	1355	600	550	1275	60	18	1259	952	664	1,25	87,6	19,3
0PDRRB089061900	1430	600	550	1350	60	19	1329	1005	701	1,25	92,5	20,4

For coloured versions, change the seventh digit of the code from "0" to "9"

MIRÒ 20 Vertical

Image for illustrative purposes only

Technical specifications
Material: UNI EN 10130:2007 steel
Straight flat tubes 70x11 mm
Round manifolds diameter 38 mm
Maximum working pressure 8 bars
Test pressure 5,2 bars
Maximum operating temperature 110° C

Technical Connections and standard supply:
- 6 x 1/2" connections, internal thread
- Installation kit including:
  - brackets
  - 1 x 1/2" vent plug supplied as standard.
  - 3 x 1/2" blind plugs supplied as standard.

Anthracite brackets are available for RAL finishes.

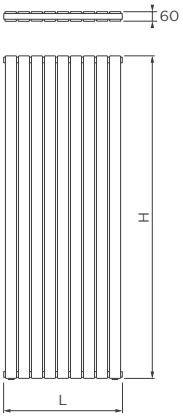

Dimensions are in millimeters (mm)

Configurations

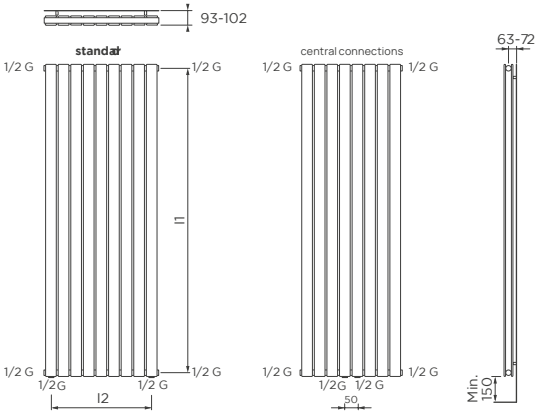

Code	Height	Width	Pipe centre	Pipe centre	Depth	Nr. flat tubes	Output Δt 50°C 75/65-20	Output Δt 42,5°C 70/55-20	Output Δt 30°C 55/45-20	Esp.	Weight	Water cont.
	H (mm)	L (mm)	I1(mm)	I2(mm)	(mm)	N.	W	W	W	N.	kg	l
0PDRxx089060800	600	605	550	525	60	8	641	517	327	1,32	20,8	4,6
0PDRxx089060900	600	680	550	600	60	9	721	579	368	1,35	23,4	5,2
0PDRxx089061000	600	755	550	675	60	10	801	647	409	1,32	26,0	5,8
0PDRxx089061100	600	830	550	750	60	11	881	708	450	1,35	28,6	6,4
0PDRxx089061200	600	905	550	825	60	12	961	776	490	1,32	31,2	7,0
0PDRxx089061300	600	980	550	900	60	13	1041	836	531	1,35	33,8	7,6
0PDRxx089061400	600	1050	550	970	60	14	1121	905	572	1,32	36,4	8,1
0PDRxx089061500	600	1125	550	1045	60	15	1201	964	613	1,35	39,0	8,7
0PDRxx089061600	600	1205	550	1125	60	16	1282	1035	654	1,32	41,6	9,3
0PDRxx089061700	600	1280	550	1200	60	17	1362	1094	695	1,35	44,2	9,9
0PDRxx089061800	600	1355	550	1275	60	18	1442	1164	736	1,32	46,8	10,4
0PDRxx089061900	600	1430	550	1350	60	19	1522	1229	777	1,32	49,0	11,0
0PDRxx089080800	800	605	750	525	60	8	832	672	425	1,32	25,6	5,8
0PDRxx089080900	800	680	750	600	60	9	936	756	478	1,32	28,8	6,5
0PDRxx089081000	800	755	750	675	60	10	1040	840	531	1,32	32,0	7,2
0PDRxx089081100	800	830	750	750	60	11	1144	924	584	1,32	35,2	7,9
0PDRxx089081200	800	905	750	825	60	12	1248	1007	637	1,32	38,4	8,6
0PDRxx089081300	800	980	750	900	60	13	1352	1091	690	1,32	41,6	9,3
0PDRxx089081400	800	1050	750	970	60	14	1456	1175	743	1,32	44,8	10,1
0PDRxx089081500	800	1125	750	1045	60	15	1560	1259	796	1,32	48,0	10,8
0PDRxx089081600	800	1205	750	1125	60	16	1664	1343	849	1,32	51,2	11,5
0PDRxx089081700	800	1280	750	1200	60	17	1768	1427	902	1,32	54,0	12,0
0PDRxx089100400	1000	305	950	225	60	4	508	410	259	1,32	15,2	3,4
0PDRxx089100500	1000	380	950	300	60	5	635	513	324	1,32	19,0	4,3
0PDRxx089100600	1000	455	950	375	60	6	762	615	389	1,32	22,8	5,2
0PDRxx089100700	1000	530	950	450	60	7	889	718	454	1,32	26,6	6,1
0PDRxx089100800	1000	605	950	525	60	8	1016	820	519	1,32	30,4	6,9
0PDRxx089100900	1000	680	950	600	60	9	1143	923	584	1,32	34,2	7,8
0PDRxx089101000	1000	755	950	675	60	10	1270	1025	648	1,32	38,0	8,6
0PDRxx089101100	1000	830	950	750	60	11	1397	1127	713	1,32	42,0	9,0
0PDRxx089180400	1740	305	1690	225	60	4	864	698	442	1,31	26,0	5,8
0PDRxx089180500	1740	380	1690	300	60	5	1080	873	553	1,31	32,5	7,3
0PDRxx089180600	1740	455	1690	375	60	6	1296	1047	662	1,31	39,0	8,8
0PDRxx089180700	1740	530	1690	450	60	7	1512	1222	772	1,31	45,5	10,3
0PDRxx089180800	1740	605	1690	525	60	8	1728	1397	883	1,31	52,0	11,7
0PDRxx089180900	1740	680	1690	600	60	9	1944	1571	993	1,31	58,5	13,2
0PDRxx089181000	1740	755	1690	675	60	10	2160	1746	1104	1,31	65,0	14,6
0PDRxx089181100	1740	830	1690	750	60	11	2376	1920	1214	1,31	72,0	16,0
0PDRxx089200400	2000	305	1950	225	60	4	952	769	487	1,31	29,2	6,4
0PDRxx089200500	2000	380	1950	300	60	5	1190	962	609	1,31	36,5	8,0
0PDRxx089200600	2000	455	1950	375	60	6	1428	1154	730	1,31	43,8	9,7
0PDRxx089200700	2000	530	1950	450	60	7	1666	1347	852	1,31	51,1	11,3
0PDRxx089200800	2000	605	1950	525	60	8	1904	1539	974	1,31	58,4	12,9
0PDRxx089200900	2000	680	1950	600	60	9	2142	1731	1096	1,31	65,7	14,5
0PDRxx089201000	2000	755	1950	675	60	10	2380	1924	1217	1,31	73,0	16,1
0PDRxx089201100	2000	830	1950	750	60	11	2618	2116	1339	1,31	80,3	17,7
0PDRxx089201200	2000	905	1950	825	60	12	2856	2308	1460	1,31	87,6	19,3
0PDRxx089201300	2000	980	1950	900	60	13	3094	2501	1582	1,31	95,0	21,0

xx = RB = standard connections
xx = RD = central connections, 50 mm pipe centre, available only for models with even number of elements.
For coloured versions, change the seventh digit of the code from "0" to "9"

MIRÒ 20 Vertical Aluminium pipe centre

Code	Height	Width	Pipe centre	Pipe centre	Depth	Nr. flat tubes	Output Δt 50°C 75/65-20	Output Δt 42,5°C 70/55-20	Output Δt 30°C 55/45-20	Esp.	Weight	Water cont.
	H (mm)	L (mm)	I1(mm)	I2(mm)	(mm)	N.	W	W	W	N.	kg	l
0PDRRB089055060	550	455	500	375	60	6	441	356	225	1,31	14,3	3,2
0PDRRB089055080	550	605	500	525	60	8	588	475	300	1,31	19,1	4,2
0PDRRB089055100	550	755	500	675	60	10	735	593	375	1,31	23,8	5,3
0PDRRB089055120	550	905	500	825	60	12	882	712	450	1,31	28,6	6,3
0PDRRB089065060	650	455	600	375	60	6	521	420	266	1,31	16,9	3,7
0PDRRB089065080	650	605	600	525	60	8	694	561	354	1,31	22,5	5,0
0PDRRB089065100	650	755	600	675	60	10	868	701	443	1,31	28,2	6,2
0PDRRB089065120	650	905	600	825	60	12	1042	841	532	1,31	33,8	7,5
0PDRRB089075060	750	455	700	375	60	6	585	472	299	1,31	18,0	4,1
0PDRRB089075080	750	605	700	525	60	8	780	630	398	1,31	24,0	5,4
0PDRRB089075100	750	755	700	675	60	10	975	787	498	1,31	30,0	6,8
0PDRRB089075120	750	905	700	825	60	12	1170	945	597	1,31	36,0	8,2
0PDRRB089085060	850	455	800	375	60	6	663	535	338	1,31	20,4	4,6
0PDRRB089085080	850	605	800	525	60	8	884	714	451	1,31	27,2	6,2
0PDRRB089085100	850	755	800	675	60	10	1105	894	564	1,31	34,0	7,7
0PDRRB089085120	850	905	800	825	60	12	1326	1071	677	1,31	40,8	9,2

For coloured versions, change the seventh digit of the code from "0" to "9"

MIRÒ 20 Vertical Cast Iron pipe centre

Code	Height	Width	Pipe centre	Pipe centre	Depth	Nr. flat tubes	Output Δt 50°C 75/65-20	Output Δt 42,5°C 70/55-20	Output Δt 30°C 55/45-20	Esp.	Weight	Water cont.
	H (mm)	L (mm)	I1(mm)	I2(mm)	(mm)	N.	W	W	W	N.	kg	l
0PDRRB089066060	665	405	615	375	60	6	533	430	272	1,31	17,3	3,8
0PDRRB089066080	665	605	615	525	60	8	711	574	363	1,31	23,1	5,0
0PDRRB089066100	665	755	615	675	60	10	888	717	453	1,31	28,8	6,3
0PDRRB089066120	665	905	615	825	60	12	1066	861	544	1,31	34,6	7,6
0PDRRB089086060	865	405	815	375	60	6	675	545	344	1,31	20,8	4,7
0PDRRB089086080	865	605	815	525	60	8	900	726	459	1,31	27,7	6,2
0PDRRB089086100	865	755	815	675	60	10	1125	908	574	1,31	34,6	7,8
0PDRRB089086120	865	905	815	825	60	12	1349	1089	689	1,31	41,5	9,4

For coloured versions, change the seventh digit of the code from "0" to "9"

STREAM

Image for illustrative purposes only

Code	Height	Width	Pipe centre	Depth	Nr. tubes	Output Δt 50°C 75/65-20	Output Δt 42,5°C 70/55-20	Output Δt 30°C 55/45-20	Esp.	Weight	Water cont.
	H (mm)	L (mm)	I (mm)	(mm)	N.	W	W	W	N.	kg	l
0PDRPTC81176000	1740	548	1690/500	52	21	880	720	471	1,234	18	18

SUPPLIED AS STANDARD IN MATT WHITE - RAL 9003 MATT
For coloured versions, change the seventh digit of the code from "C" to "9"

Technical specifications
Material: steel
Straight tubes diameter 16 mm
Round manifolds diameter 38 mm
Maximum working pressure 8 bars
Test pressure 10,4 bars
Maximum operating temperature 110° C

Technical Connections and standard supply:
- 6 x 1/2" connections, internal thread
(four connections at the ends of the manifolds, two bottom connections).
- Installation kit including:
- EASY FIT brackets
- 1 x 1/2" vent plug supplied as standard.
- 3 x 1/2" blind plugs supplied as standard

Standard Configuration

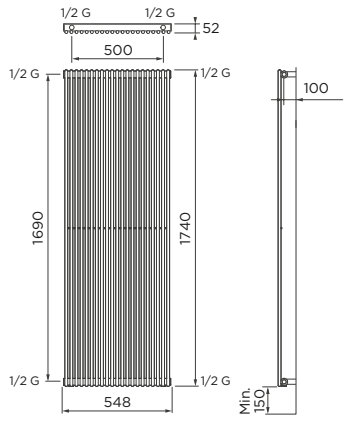

Dimensions are in millimeters (mm)

Electric Towel Warmers

Electric Towel Warmer range

The RADIATORS range of bathroom radiators includes heating appliances with a variety of geometries and styles.

The electronic controls used to operate the heating elements range from simple functional on/off switches to more sophisticated electronic thermostats with LCD display, remote control and various functions.

Innovation

RADIATORS offers the widest range of electric radiators on the market thanks to its know-how and decades of experience in designing technical solutions for consumers.

The radiators are fitted with the exclusive ASV (Automatic Safety Valve) safety system to maintain the correct pressure inside the heating appliance, preserving its mechanical characteristics even when exposed to the high wear cycles typical of electrical appliances.

Quality and performance

RADIATORS towel warmers are designed to meet to meet a variety of different comfort requirements.

With electrical components subjected to strict quality controls, they offer either basic solutions or more complex versions able to control the towel warmer through thermostats with multiple functions.

The heating elements and thermostats are tested in limit conditions to verify the quality of the electrical components, the actual IP class and the electrical insulation, fundamental for the safety of radiators for installation in wet environments such as bathrooms.

Verniciatura

The top quality painted finish of RADIATORS towel warmers is created using an industrial process from the automotive sector, giving each element a glossy long-lasting colour.

The colour is the characteristic RADIATORS RAL 9016 white. Complying with DIN 55900.

Certification and compliance marks

European CE and Ecodesign compliance.

Warranty

Thanks to the top quality standards and implementation of automated control systems, RADIATORS is the only company able to guarantee the electric components of its products for 2 years and the heating part for 5 years.

FANTASIA Digital White

Image for illustrative purposes only

Code with plug	Code without plug	Height	Width	Depth	Weight	Power
EUROPLUG (CEE 7/17)		H (mm)	L (mm)	(mm)	kg	W
0SDRCL0120950C5	0SDRCL0120950A5	1041	500	45	10,5	500
0SDRCL0121155C7	0SDRCL0121155A7	1266	550	45	13,5	700
0SDRCL0121560C1	0SDRCL0121560A1	1626	600	45	20	1000

Technical specifications
Material: UNI EN 10130:2007 steel
Straight tubes
Oval manifolds 40 x 30 mm
Mains power supply supported: 230V AC, 50Hz
Class 2, IP34

Mode and functions

For operating modes see chapter Mode and Functions.

Standard supply:
- white digital thermostat
- fixing kit
- white cable, 1200 mm long, with plug
- white cable, 900 mm long, without plug

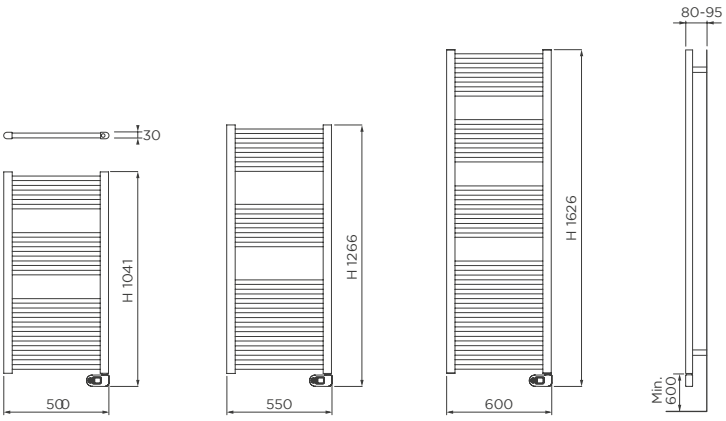

Dimensions are in millimeters (mm)

FANTASIA Digital Anthracite

Image for illustrative purposes only

Code with plug	Code without plug	Height	Width	Depth	Weight	Power
EUROPLUG (CEE 7/17)		H (mm)	L (mm)	(mm)	kg	W
0SDRCL3120950C5	0SDRCL3120950A5	1041	500	45	10,5	500
0SDRCL3121155C7	0SDRCL3121155A7	1266	550	45	13,5	700
0SDRCL3121560C1	0SDRCL3121560A1	1626	600	45	20	1000

Technical specifications
Material: UNI EN 10130:2007 steel
Straight tubes
Oval manifolds 40 x 30 mm
Mains power supply supported: 230V AC, 50Hz
Class 2, IP34

Mode and functions

For operating modes see chapter Mode and Functions.

Standard supply:
- anthracite digital thermostat
- fixing kit
- black cable, 1200 mm long, with plug
- black cable, 900 mm long, without plug

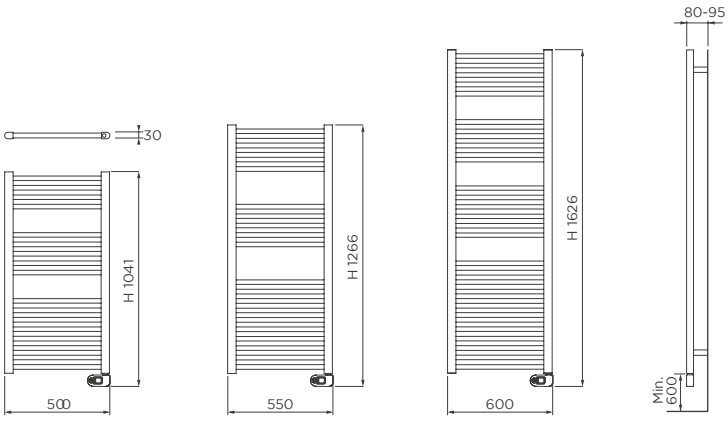

Dimensions are in millimeters (mm)

FANTASIA Digital Chrome

Image for illustrative purposes only

Code with plug	Code without plug	Height	Width	Depth	Weight	Power
EUROPLUG (CEE 7/17)		H (mm)	L (mm)	(mm)	kg	W
0SDRCL1120950C3	0SDRCL1120950A3	1041	500	45	10,5	300
0SDRCL1121150C4	0SDRCL1121150A4	1266	500	45	13,3	400

Technical specifications
Material: UNI EN 10130:2007 steel
Straight tubes
Oval manifolds 40 x 30 mm
Mains power supply supported: 230V AC, 50Hz
Class 2, IP34

Mode and functions

For operating modes see chapter Mode and Functions.

Standard supply:
- chrome digital thermostat
- fixing kit
- grey cable, 1200 mm long, with plug
- grey cable, 900 mm long, without plug

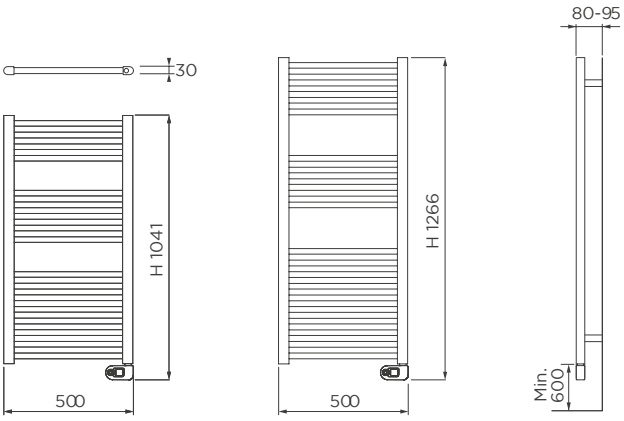

Dimensions are in millimeters (mm)

FANTASIA On/Off White

Image for illustrative purposes only

Code with plug	Code without plug	Height	Width	Depth	Weight	Power
EUROPLUG (CEE 7/17)		H (mm)	L (mm)	(mm)	kg	W
0SDRCL017065073	0SDRCL017065093	791	500	30	8,4	300
0SDRCL012095075	0SDRCL012095095	1061	500	30	10,5	500
0SDRCL012115577	0SDRCL012115597	1286	550	30	13,5	700
0SDRCL012156071	0SDRCL012156091	1646	600	30	20	1000

Technical specifications
Material: UNI EN 10130:2007 steel
Straight tubes
Oval manifolds 40 x 30 mm
Mains power supply supported: 230V AC, 50Hz
Class 2, IP34

Standard supply:
- white on-off control
- fixing kit
- white cable, 1200 mm long, with plug
- white cable, 900 mm long, without plug

To be used with a programmable smart plug that can be ordered separately (55250200000).

Dimensions are in millimeters (mm)

FANTASIA On/Off Anthracite

Image for illustrative purposes only

Code with plug	Code without plug	Height	Width	Depth	Weight	Power
EUROPLUG (CEE 7/17)		H (mm)	L (mm)	(mm)	kg	W
0SDRCL317065073	0SDRCL317065093	791	500	30	8,4	300
0SDRCL312095075	0SDRCL312095095	1061	500	30	10,5	500
0SDRCL312115577	0SDRCL312115597	1286	550	30	13,5	700
0SDRCL312156071	0SDRCL312156091	1646	600	30	20	1000

Technical specifications
Material: UNI EN 10130:2007 steel
Straight tubes
Oval manifolds 40 x 30 mm
Mains power supply supported: 230V AC, 50Hz
Class 2, IP34

Standard supply:
- anthracite on-off control
- fixing kit
- black cable, 1200 mm long, with plug
- black cable, 900 mm long, without plug

To be used with a programmable smart plug that can be ordered separately (55250200000).

Dimensions are in millimeters (mm)

FANTASIA On/Off Chrome

Image for illustrative purposes only

Code with plug	Code without plug	Height	Width	Depth	Weight	Power
EUROPLUG (CEE 7/17)		H (mm)	L (mm)	(mm)	kg	W
0SDRCL112095073	0SDRCL112095093	1061	500	30	8,4	300
0SDRCL112115074	0SDRCL112115094	1286	500	30	13,3	400

Technical specifications
Material: UNI EN 10130:2007 steel
Straight tubes
Oval manifolds 40 x 30 mm
Mains power supply supported: 230V AC, 50Hz
Class 2, IP34

Dimensions are in millimeters (mm)

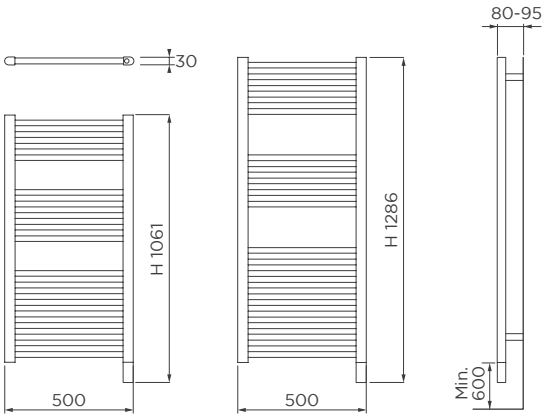

Standard supply:
- grey on-off control
- fixing kit
- grey cable, 1200 mm long, with plug
- grey cable, 900 mm long, without plug

To be used with a programmable smart plug that can be ordered separately (55250200000).

FANTASIA DRY

Image for illustrative purposes only

Code with plug	Height	Width	Depth	Weight	Power
EUROPLUG (CEE 7/17)	H (mm)	L (mm)	(mm)	kg	W
0SDRDA0980955F5	980	540	42	4	500
0SDRDA0981355FF	1370	540	42	5,5	750

Technical specifications
Material: Aluminium T6060
Straight tubes
Hemispherical manifolds 45x45 mm
Mains power supply supported: 230V AC, 50Hz
Class 2, IP24

Mode and functions

For operating modes see chapter Mode and Functions.

Standard supply:
- white digital thermostat
- fixing kit
- white cable, 1200 mm long

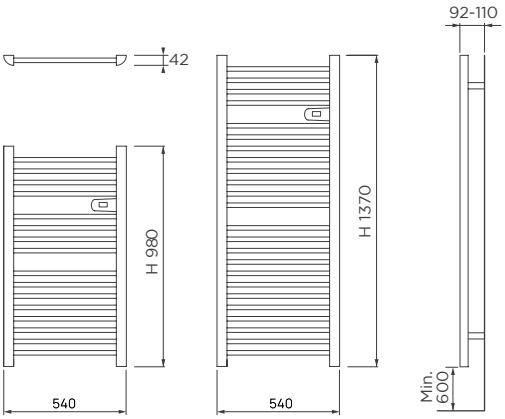

Dimensions are in millimeters (mm)

UNIQUE On/Off

Image for illustrative purposes only

Code with plug	Code without plug	Height	Width	Depth	Weight	Power
EUROPLUG (CEE 7/17)		H (mm)	L (mm)	(mm)	kg	W
0SDRTD057125833	0SDRTD057125863	1357	585	35	10	300

Technical specifications
Material: UNI EN 10130:2007 steel
Straight tubes
Round manifolds diameter 35 mm
Mains power supply supported: 230V AC, 50Hz
Class 2, IP34

Dimensions are in millimeters (mm)

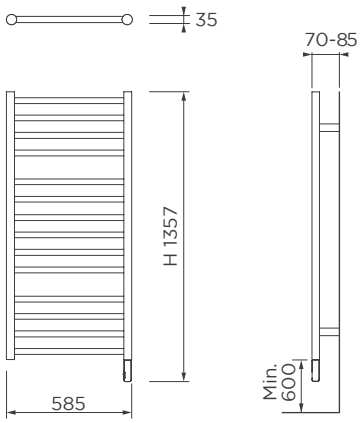

Standard supply:
- white on-off control
- fixing kit
- white cable, 1200 mm long, with plug
- white cable, 900 mm long, without plug

To be used with a programmable smart plug that can be ordered separately (55250200000).

CORTINA On/Off

Image for illustrative purposes only

Code with plug	Code without plug	Height	Width	Depth	Weight	Power
EUROPLUG (CEE 7/17)		H (mm)	L (mm)	(mm)	kg	W
0SDRBQ045084834	0SDRBQ045084864	929	480	30	8	400
0SDRBQ045114835	0SDRBQ045114865	1298	480	30	10	500

Technical specifications
Material: UNI EN 10130:2007 steel
Square tubes
Square manifolds 30 x 30 mm
Mains power supply supported: 230V AC, 50Hz
Class 2, IP34

Standard supply:
- white on-off control
- fixing kit
- white cable, 1200 mm long, with plug
- white cable, 900 mm long, without plug

To be used with a programmable smart plug that can be ordered separately (55250200000).

Dimensions are in millimeters (mm)

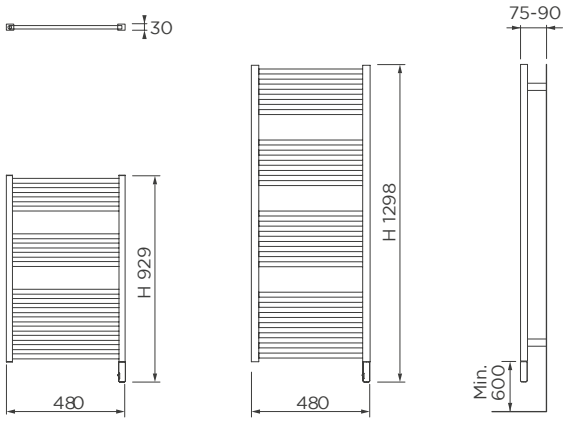

FLUID

COBALTO Digital

Image for illustrative purposes only

Code with plug	Code without plug	Height	Width	Depth	Weight	Power
EUROPLUG (CEE 7/17)		H (mm)	L (mm)	(mm)	kg	W
0PDRPM0631050C5	0PDRPM0631050A5	1090	500	49	22,8	500
0PDRPM0631350C7	0PDRPM0631350A7	1413	500	49	25,1	700

For coloured versions, change the seventh digit of the code from "0" to "9"

Technical specifications
Material: UNI EN 10130:2007 steel
Straight flat
Round manifolds diameter 38 mm
Mains power supply supported: 230V AC, 50Hz
Class 2, IP34

Mode and functions

For operating modes see chapter Mode and Functions.

Standard supply:
- white digital thermostat
- fixing kit
- white cable, 1200 mm long, with plug
- white cable, 900 mm long, without plug

Chromed digital thermostat and brackets and grey cable are available for RAL finishes.

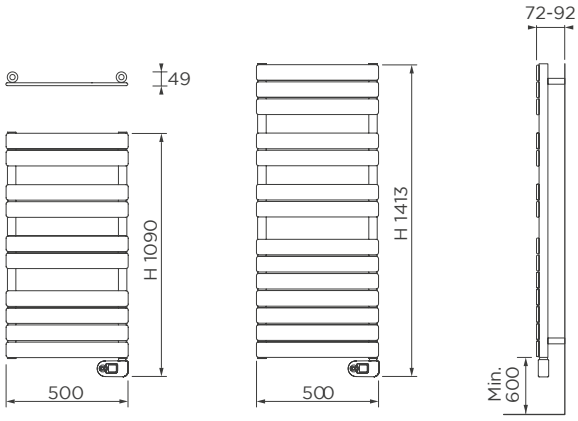

Dimensions are in millimeters (mm)

AGATA Digital

Image for illustrative purposes only

Code with plug	Code without plug	Height	Width	Depth	Weight	Power
EUROPLUG (CEE 7/17)		H (mm)	L (mm)	(mm)	kg	W
0PDRTR0511155C5	0PDRTR0511155A5	1193	550	49	20,6	500
0PDRTR0511455C7	0PDRTR0511455A7	1517	550	49	26,5	700
0PDRTR0511755C1	0PDRTR0511755A1	1841	550	49	31,5	1000

For coloured versions, change the seventh digit of the code from "0" to "9"

Technical specifications
Material: UNI EN 10130:2007 steel
Straight flat
Round manifolds diameter 38 mm
Mains power supply supported: 230V AC, 50Hz
Class 2, IP34

Mode and functions

For operating modes see chapter Mode and Functions.

Standard supply:
- white digital thermostat
- fixing kit
- white cable, 1200 mm long, with plug
- white cable, 900 mm long, without plug

Chromed digital thermostat and brackets and grey cable are available for RAL finishes.

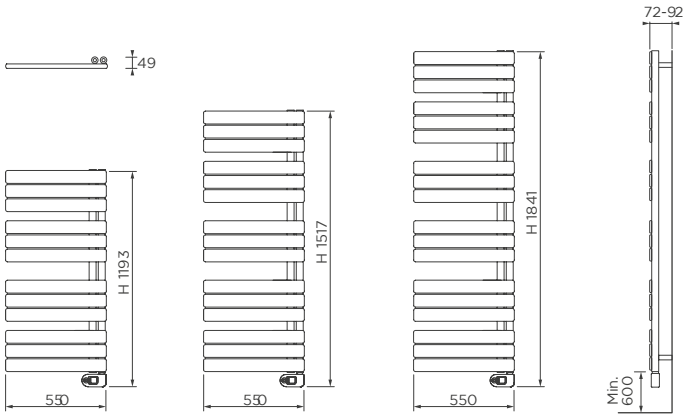

Dimensions are in millimeters (mm)

FLUID

IRIDIO Digital

Image for illustrative purposes only

Code with plug	Code without plug	Height	Width	Depth	Weight	Power
EUROPLUG (CEE 7/17)		H (mm)	L (mm)	(mm)	kg	W
0PDRMM0711150C5	0PDRMM0711150A5	1195	500	56	15,9	500
0PDRMM0711450C7	0PDRMM0711450A7	1523	500	56	22,9	700
0PDRMM0711760C1	0PDRMM0711760A1	1810	600	56	28,1	1000

Technical specifications
Material: UNI EN 10130:2007 steel
Straight
Mains power supply supported: 230V AC, 50Hz
Class 2, IP34

Mode and functions

For operating modes see chapter Mode and Functions.

Standard supply:
- white digital thermostat
- fixing kit
- white cable, 1200 mm long, with plug
- white cable, 900 mm long, without plug

Chromed digital thermostat and brackets and grey cable are available for RAL finishes.

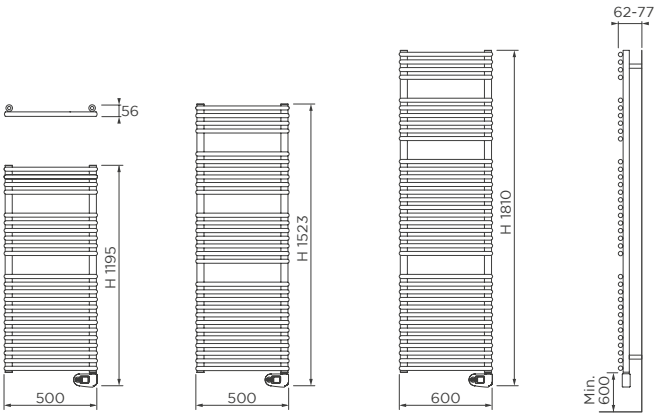

Dimensions are in millimeters (mm)

WINNER Digital

Image for illustrative purposes only

Code with plug	Code without plug	Height	Width	Depth	Weight	Power
EUROPLUG (CEE 7/17)		H (mm)	L (mm)	(mm)	kg	W
0SDRFO0550855C5	0SDRFO0550855A5	975	550	30	15,9	500

Technical specifications
Material: UNI EN 10130:2007 steel
Straight
Oval manifolds 40 x 30 mm
Mains power supply supported: 230V AC, 50Hz
Class 2, IP34

Mode and functions

For operating modes see chapter Mode and Functions.

Standard supply:
- white digital thermostat
- fixing kit
- white cable, 1200 mm long, with plug
- white cable, 900 mm long, without plug

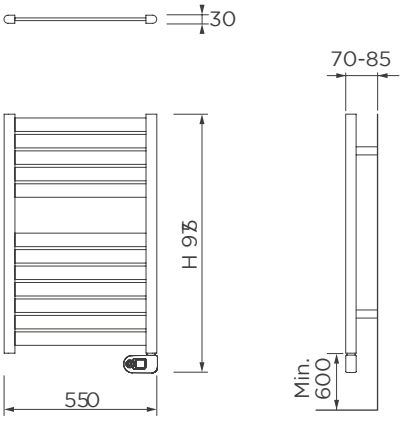

Dimensions are in millimeters (mm)

Note

Electric Radiators

Electric Radiators range

The range of RADIATORS aluminium electric radiators offers powers ranging from 700 to 2000W.

The electronic controls can be used to regulate temperature and programme the radiator according to the user's schedule and needs, with a series of different operating modes and new functions for improved safety, energy saving and ease of operation.

Quality and performance

RADIATORS aluminium electric radiators are the most suitable appliances for heating the home in electric heating systems or when you want to heat a room independently from the central hot water installation.

The aluminium structure exploits the metal's ability to absorb and release heat rapidly, warming the room faster than with a steel radiator. Aluminium radiators are lighter than the steel equivalent, facilitating wall mounting.

The heating elements and thermostats are tested in limit conditions to verify the quality of the electric components, the actual IP class and the electric insulation, fundamental for the safety of radiators.

Certification and compliance marks

European CE conformity and compliance with the specifications required by the French standard NF and also NF PERFORMANCE (www.certita.fr), compliance with the Ecodesign standard.

Warranty

Thanks to the top quality standards and implementation of automated control systems, RADIATORS is the only company able to guarantee the electric components of its products for 2 years and the heating part for 5 years.

RAYO White

Image for illustrative purposes only

Code with plug	Height	Width	Depth	Weight	Power
EUROPLUG (CEE 7/17)	H (mm)	L (mm)	(mm)	kg	W
0112781056	1218	530	50	12,0	500
0112781076	1540	580	50	15,0	700
0112781106	1740	630	50	19,0	1000

Technical specifications
Material: UNI EN 10130:2007 steel
Mains power supply supported: 230V AC, 50Hz
Class 2, IP34

Standard supply:
- on-off control
- fixing kit
- white cable, 1200 mm long, with plug

White cable available for RAL finishes.

To be used with a programmable smart plug that can be ordered separately (55250200000).

Dimensions are in millimeters (mm)

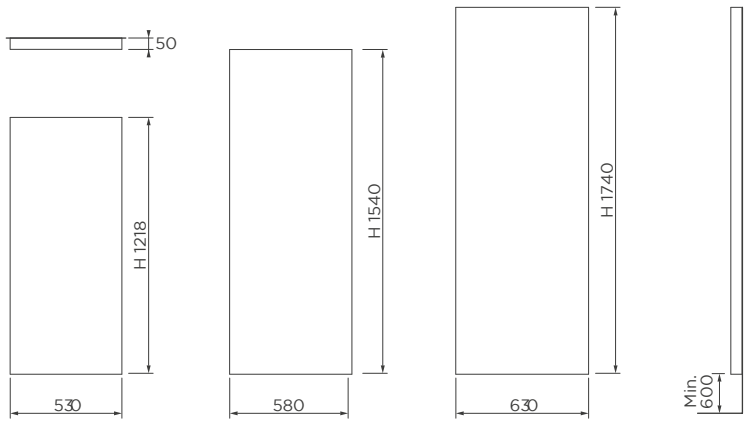

DRY

RAYO Anthracite

Image for illustrative purposes only

Code with plug	Height	Width	Depth	Weight	Power
EUROPLUG (CEE 7/17)	H (mm)	L (mm)	(mm)	kg	W
0112781057	1218	530	50	12,0	500
0112781077	1540	580	50	15,0	700
0112781107	1740	630	50	19,0	1000

Technical specifications
Material: UNI EN 10130:2007 steel
Mains power supply supported: 230V AC, 50Hz
Class 2, IP34

Standard supply:
- on-off control
- fixing kit
- white cable, 1200 mm long, with plug

White cable available for RAL finishes.

To be used with a programmable smart plug that can be ordered separately (55250200000).

Dimensions are in millimeters (mm)

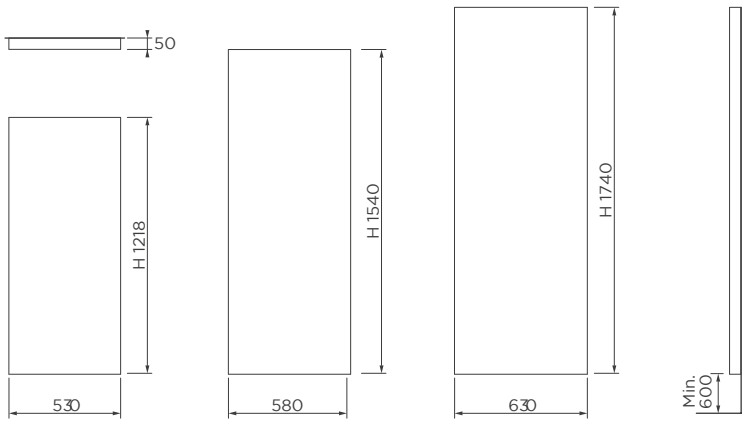

CLOUD White

Image for illustrative purposes only

Code without plug	Height	Width	Depth	Weight	Power
	H (mm)	L (mm)	(mm)	kg	W
011277N07S	600	545	115	11	700
011277N10S	600	545	115	11,1	1000
011277N15S	600	825	115	15,3	1500
011277N20S	600	1035	115	19	2000

Technical specifications
Material: UNI EN 10130:2007 steel
Heating core: Ceramic
Mains power supply supported: 230V AC, 50Hz
Class 2, IP24

Mode and functions

For operating modes see chapter Mode and Functions.

Standard supply:
- white digital thermostat
- fixing kit (H)
- white cable, 900 mm long

For proper wiring, consult the instruction on
https://radiators-spa.it/download-cataloghi-manuali/

Dimensions are in millimeters (mm)

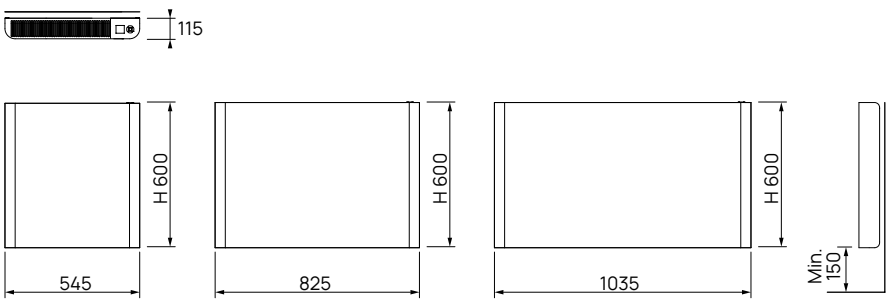

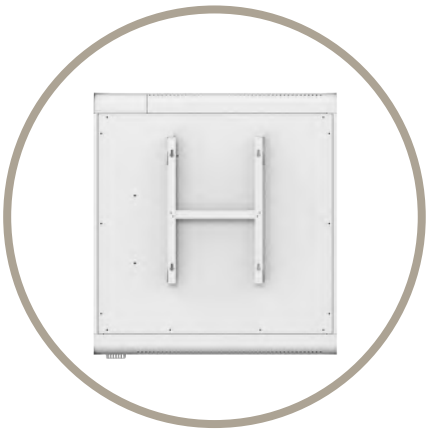

DRY

CLOUD Anthracite

Image for illustrative purposes only

Code without plug	Height	Width	Depth	Weight	Power
	H (mm)	L (mm)	(mm)	kg	W
011277N07T	600	545	115	11	700
011277N10T	600	545	115	11,1	1000
011277N15T	600	825	115	15,3	1500
011277N20T	600	1035	115	19	2000

Technical specifications
Material: UNI EN 10130:2007 steel
Heating core: Ceramic
Mains power supply supported: 230V AC, 50Hz
Class 2, IP24

Mode and functions

For operating modes see chapter Mode and Functions.

Standard supply:
- anthracite digital thermostat
- fixing kit (H)
- black cable, 900 mm long

For proper wiring, consult the instruction on
https://radiators-spa.it/download-cataloghi-manuali/

Dimensions are in millimeters (mm)

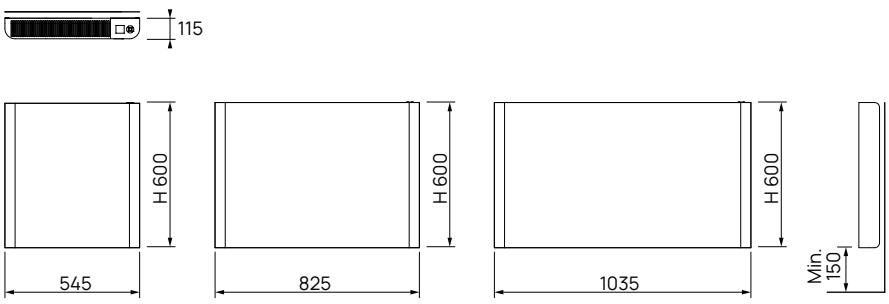

ELECTRIC RADIATORS

SMOOTH White

Image for illustrative purposes only

Code with plug	Code without plug	Height	Width	Depth	Weight	Power
EUROPLUG (CEE 7/17)		H (mm)	L (mm)	(mm)	kg	W
0PDRMSNA10614Z1	0PDRMENA10614Z1	600	740	75	22	1000
0PDRMSNA10620ZR	0PDRMENA10620ZR	600	1020	75	31	1500
0PDRMSNA10623ZS	0PDRMENA10623ZS	600	1160	75	36	1800

Technical specifications
Material: UNI EN 10130:2007 steel
Round vertical tubes
Mains power supply supported: 230V AC, 50Hz
Class 2, IP34

Mode and functions

For operating modes see chapter Mode and Functions.

Standard supply:
- white digital thermostat
- fixing kit
- white cable, 1200 mm long, with plug
- white cable, 900 mm long, without plug
- remote control is included

The magnetic thermostat can be removed and used separately from the product.

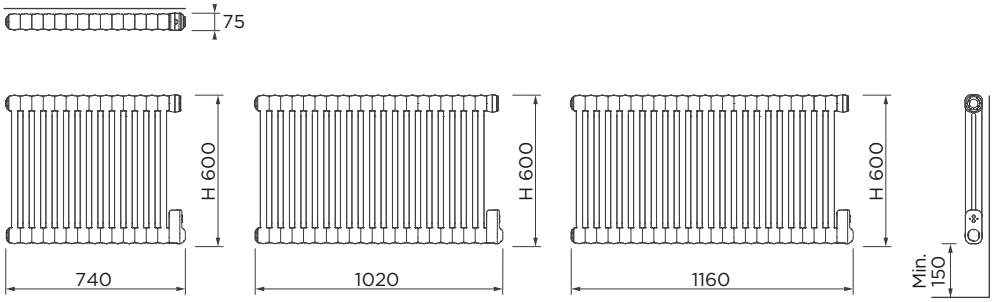

Dimensions are in millimeters (mm)

SMOOTH Anthracite

Image for illustrative purposes only

Code with plug	Code without plug	Height	Width	Depth	Weight	Power
EUROPLUG (CEE 7/17)		H (mm)	L (mm)	(mm)	kg	W
0PDRMSRA10614Z1	0PDRMERA1064Z1	600	740	75	22	1000
0PDRMSRA10620ZR	0PDRMERA10620ZR	600	1020	75	31	1500
0PDRMSRA10623ZS	0PDRMERA10623ZS	600	1160	75	36	1800

Technical specifications
Material: UNI EN 10130:2007 steel
Round vertical tubes
Mains power supply supported: 230V AC, 50Hz
Class 2, IP34

Mode and functions

For operating modes see chapter Mode and Functions.

Standard supply:
- anthracite digital thermostat
- fixing kit
- black cable, 1200 mm long, with plug
- black cable, 900 mm long, without plug
- remote control is included

The magnetic thermostat can be removed and used separately from the product.

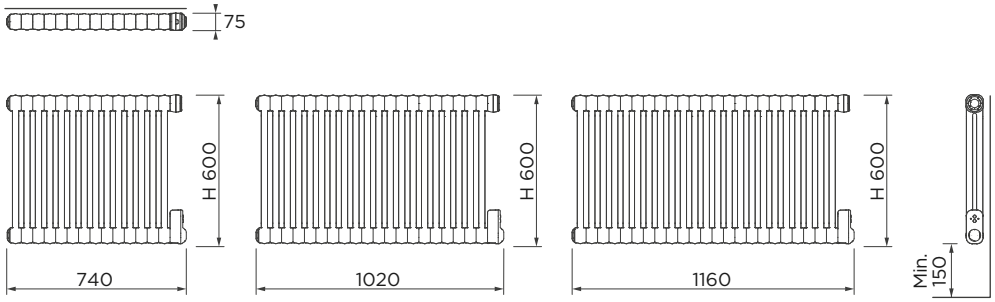

Dimensions are in millimeters (mm)

ALU Simple *PLUS* Dry White

Image for illustrative purposes only

Code with plug	Code without plug	Height	Width	Depth	Weight	Power
EUROPLUG (CEE 7/17)		H (mm)	L (mm)	(mm)	kg	W
02520650E5	02520650D2	580	630	90	17	1000
02520950E5	02520950D2	580	870	90	24,9	1500
02521250E5	02521250D2	580	1110	90	32,7	2000

Technical specifications
Material: aluminium
Mains power supply supported: 230V AC, 50Hz
Class 2, IPX4

Mode and functions

For operating modes see chapter Mode and Functions.

Standard supply:
- white digital thermostat
- fixing kit
- white cable, 1200 mm long, with plug
- white cable, 900 mm long, without plug
- remote control is included

Dry technology excludes the use of any fluid, directly heating the air.

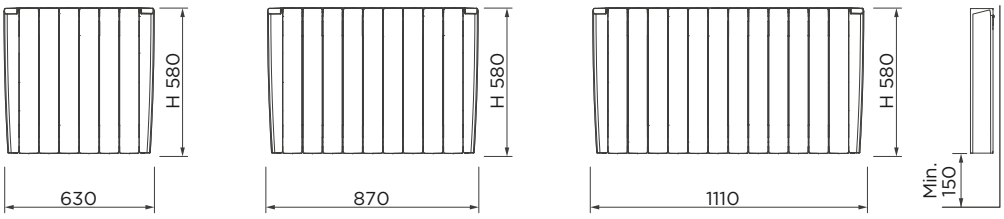

Dimensions are in millimeters (mm)

ALU Simple *PLUS* Fluid White

Image for illustrative purposes only

Code with plug	Code without plug	Height	Width	Depth	Weight	Power
EUROPLUG (CEE 7/17)		H (mm)	L (mm)	(mm)	kg	W
02500550E2	02500550D2	580	550	90	11,5	1000
02500850E2	02500850D2	580	790	90	17,5	1500
02501050E2	02501050D2	580	950	90	21,5	1800

Technical specifications
Material: aluminium
Mains power supply supported: 230V AC, 50Hz
Class 2, IP24

Mode and functions

For operating modes see chapter Mode and Functions.

Standard supply:
- white digital thermostat
- fixing kit
- white cable, 1200 mm long, with plug
- white cable, 900 mm long, without plug
- remote control is included

The fluid technology reproduces the warmth sensation of a hydronic heating body.

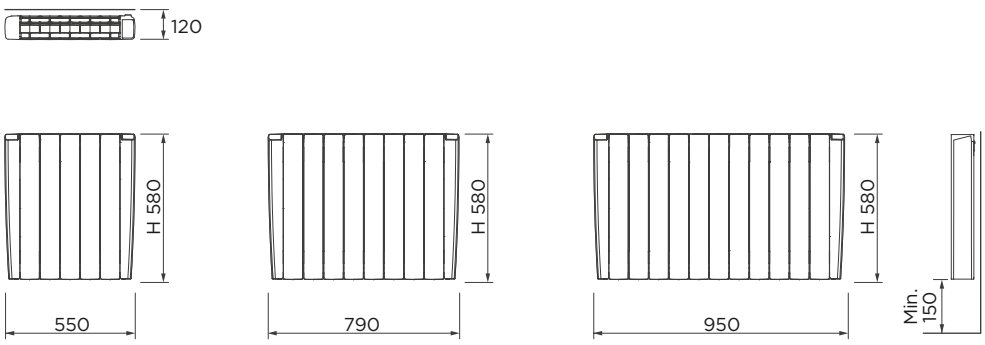

Dimensions are in millimeters (mm)

SIGHT

Presence detector
Sight automatically detects the absence of people inside the environment, decreasing the temperature and ensures significant energy savings.

Certified NF électricité performace ★★★

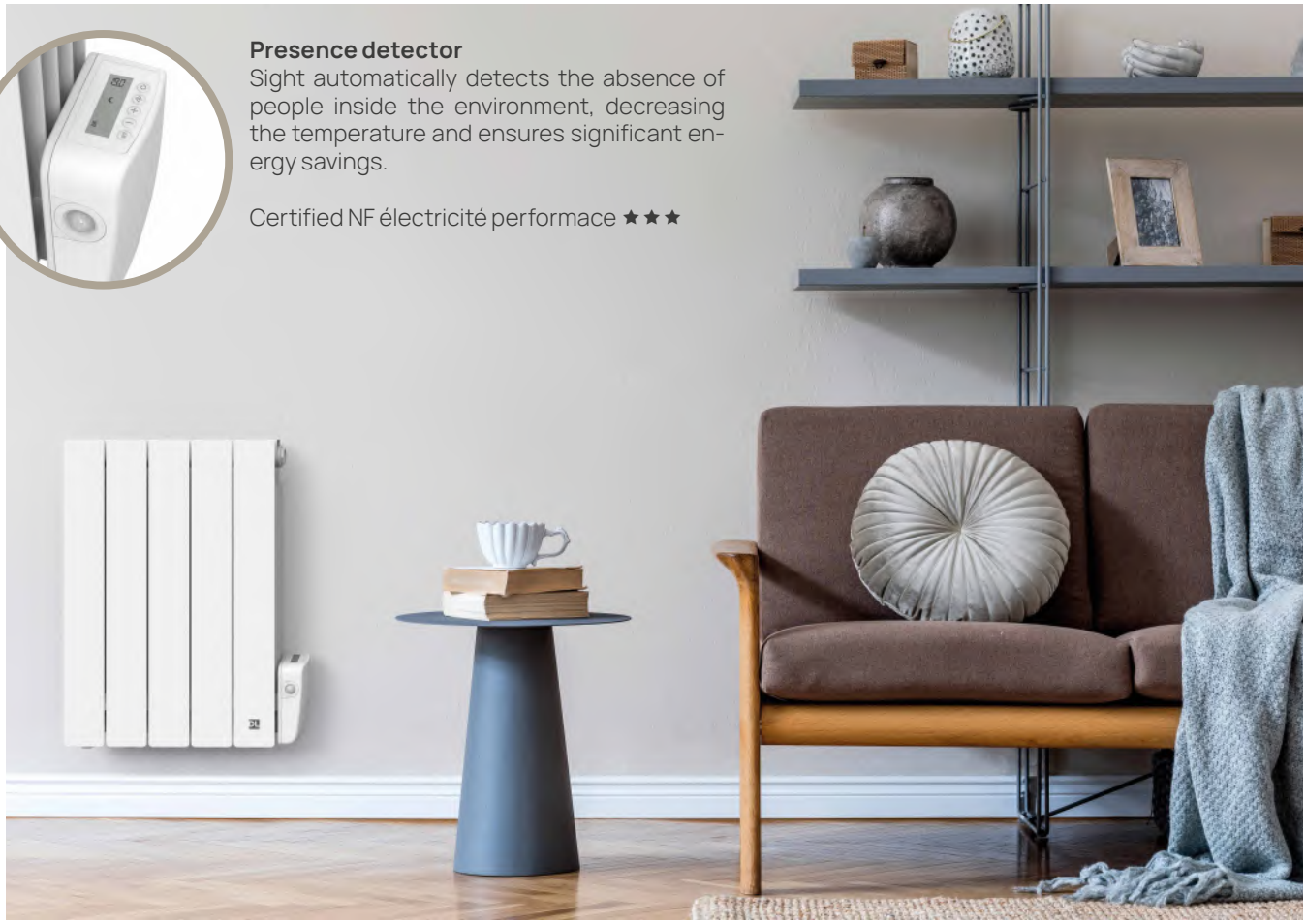

Image for illustrative purposes only

Code with plug	Code without plug	Height	Width	Depth	Weight	Power
EUROPLUG (CEE 7/17)		H (mm)	L (mm)	(mm)	kg	W
0250045046	0250045045	580	390	90	8	500
0250055047	0250055045	580	470	90	10	700
0250055048	0250055046	580	470	90	10	1000
0250075003	0250075002	580	630	90	13	1250
0250085046	0250085045	580	710	90	15	1500
02501150C8	02501150C7	580	950	90	19	1800

Technical specifications
Material: aluminium
Mains power supply supported: 230V AC, 50Hz
Class 2, IP24

Mode and functions

For operating modes see chapter Mode and Functions.

Standard supply:
- white digital thermostat
- fixing kit
- white cable, 1200 mm long, with plug
- white cable, 900 mm long, without plug

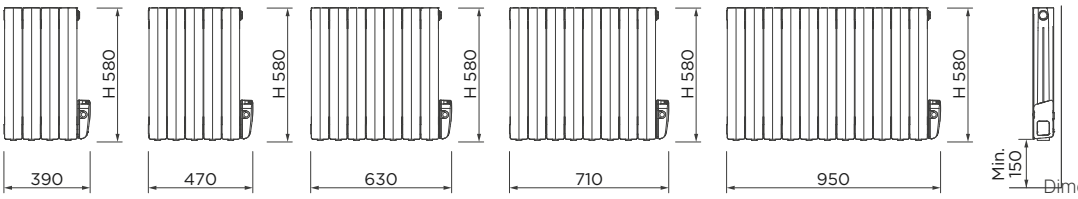

Dimensions are in millimeters (mm)

ALYNE Fluid

Image for illustrative purposes only

Code with plug	Code without plug	Height	Width	Depth	Weight	Power
EUROPLUG (CEE 7/17)		H (mm)	L (mm)	(mm)	kg	W
02500650C8	02500650C7	580	580	90	13	1000
02500950C9	02500950C8	580	820	90	18	1500
02501150D1	02501150C9	580	980	90	22	1800

Technical specifications
Material: aluminium
Mains power supply supported: 230V AC, 50Hz
Class 2, IP24

Mode and functions

For operating modes see chapter Mode and Functions.

Standard supply:
- white digital touchscreen thermostat
- fixing kit
- white cable, 1200 mm long, with plug
- white cable, 900 mm long, without plug

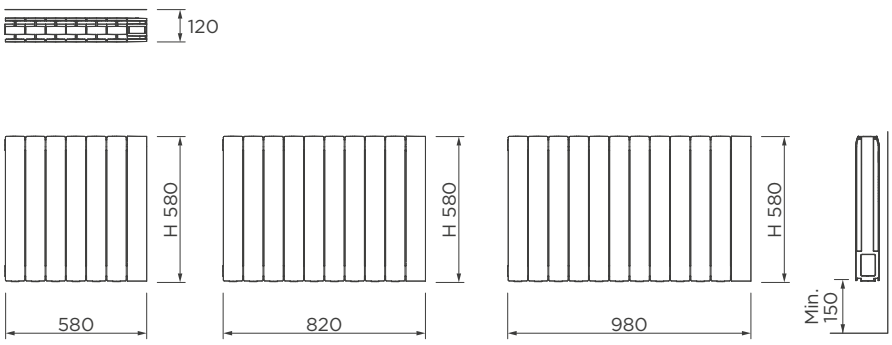

Dimensions are in millimeters (mm)

Air Flow Technology

AIR FLOW TECHNOLOGY Range

The RADIATORS Air Flow range includes 4 different types of towel warmer geometry, for combination with the fan heater, to fit in perfectly in any type of bathroom environment.

Innovation

Our exclusive Air Flow technology gives you three products in one, adding the advantages of a traditional electric fan heater to our range of bathroom towel warmers. The fan heater can be used alone to heat small rooms quickly and efficiently, in combination with the towel warmer to increase output, or as just a towel warmer.

Air Flow technology is available in combination with electric towel warmers E-Flow or with hydraulic towel warmes H-Flow.

Quality and performance

The RADIATORS Air Flow range is designed to meet a variety of different comfort requirements.

Meticulous study of the thermodynamic flows has allowed us to create fan heaters able to emit the right flow of hot air to heat all bathrooms quickly and comfortably.

A remote control is included with each fan radiator to adjust power and settings.

Varnishing

The top quality painted finish of RADIATORS Air Flow range is created using an industrial process from the automotive sector, giving a glossy long-lasting colour.

The colour is the characteristic RADIATORS RAL 9016 white complying with DIN 55900.

Certification and compliance marks

European CE and Ecodesign compliance.

Warranty

Thanks to the top quality standards and implementation of automated control systems, RADIATORS is the only company that is able to guarantee its E-Flow products 2 years for electrical parts and 5 years for the heating body, while for H-Flow products 2 years for Electric parts and 15 years for the heating body.

ELEGANCE E-Flow White

Image for illustrative purposes only

Code with plug	Code without plug	Height	Width	Depth	Weight	Towel warmer power	Fan heater power
EUROPLUG (CEE 7/17)		H (mm)	L (mm)	(mm)	kg	W	W
0SR1CL0080855S5	0SDRCL0080855S5	894	550	143	12,5	500	1000
0SR1CL0011155S7	0SDRCL0011155S7	1223	550	143	17,5	700	1000
0SR1CL0011655S1	0SDRCL0011655S1	1714	550	143	25,0	1000	1000

Technical specifications
Material: UNI EN 10130:2007 steel
Straight tubes
Semioval manifolds 40 x 30 mm
Mains power supply supported: 230V AC, 50Hz
Class 2, IP24

Mode and functions

For operating modes see chapter Mode and Functions.

Standard supply:
- white digital remote control
- fixing kit
- white cable, 1200 mm long, with plug
- white cable, 900 mm long, without plug

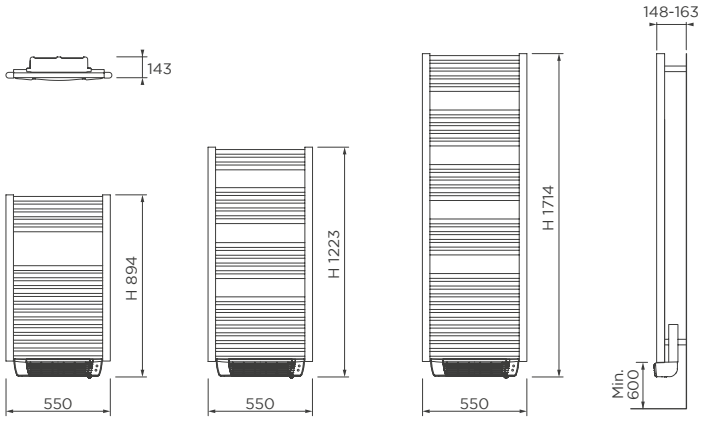

Dimensions are in millimeters (mm)

ELEGANCE E-Flow Anthracite

Image for illustrative purposes only

Code with plug	Code without plug	Height	Width	Depth	Weight	Towel warmer power	Fan heater power
EUROPLUG (CEE 7/17)		H (mm)	L (mm)	(mm)	kg	W	W
0SR1CL3080855S5	0SDRCL3080855S5	894	550	143	12,5	500	1000
0SR1CL3011155S7	0SDRCL3011155S7	1223	550	143	17,5	700	1000
0SR1CL3911655S1	0SDRCL3011655S1	1714	550	143	25,0	1000	1000

Technical specifications
Material: UNI EN 10130:2007 steel
Straight tubes
Semioval manifolds 40 x 30 mm
Mains power supply supported: 230V AC, 50Hz
Class 2, IP24

Mode and functions

For operating modes see chapter Mode and Functions.

Standard supply:
- anthracite digital remote control
- fixing kit
- black cable, 1200 mm long, with plug
- black cable, 900 mm long, without plug

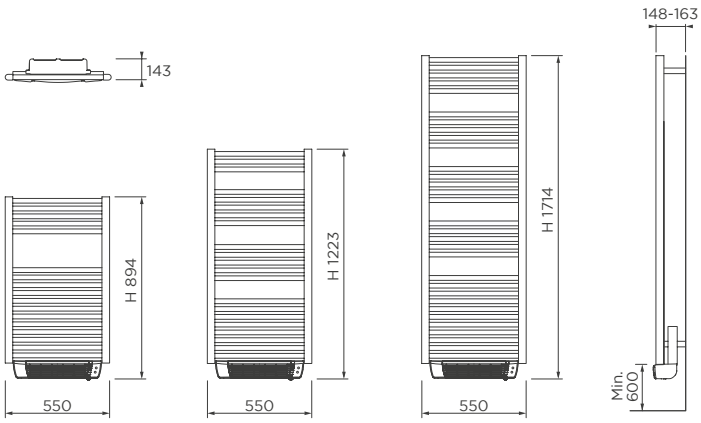

Dimensions are in millimeters (mm)

COBALTO E-Flow White

Image for illustrative purposes only

Code with plug	Code without plug	Height	Width	Depth	Weight	Towel warmer power	Fan heater power
EUROPLUG (CEE 7/17)		H (mm)	L (mm)	(mm)	kg	W	W
0PR1PM0631055S5	0PDRPM0631055S5	1094	550	143	22,4	500	1000
0PR1PM0631355S7	0PDRPM0631355S7	1422	550	143	27,0	700	1000
0PR1PM0631655S1	0PDRPM0631655S1	1730	550	143	33,0	1000	1000

For coloured versions, change the seventh digit of the code from "0" to "9"

Technical specifications
Material: UNI EN 10130:2007 steel
Straight flat tubes
Round manifolds diameter 38 mm
Mains power supply supported: 230V AC, 50Hz
Class 2, IP24

Mode and functions

For operating modes see chapter Mode and Functions.

Standard supply:
- white digital remote control
- fixing kit
- white cable, 1200 mm long, with plug
- white cable, 900 mm long, without plug

Dimensions are in millimeters (mm)

COBALTO E-Flow Anthracite

Image for illustrative purposes only

Code with plug	Code without plug	Height	Width	Depth	Weight	Towel warmer power	Fan heater power
EUROPLUG (CEE 7/17)		H (mm)	L (mm)	(mm)	kg	W	W
0PR1PM3631055S5	0PDRPM3631055S5	1094	550	143	22,4	500	1000
0PR1PM3631355S7	0PDRPM3631355S7	1422	550	143	27,0	700	1000
0PR1PM3631655S1	0PDRPM3631655S1	1730	550	143	33,0	1000	1000

Technical specifications
Material: UNI EN 10130:2007 steel
Straight flat tubes
Round manifolds diameter 38 mm
Mains power supply supported: 230V AC, 50Hz
Class 2, IP24

Mode and functions

For operating modes see chapter Mode and Functions.

Standard supply:
- anthracite digital remote control
- fixing kit
- black cable, 1200 mm long, with plug
- black cable, 900 mm long, without plug

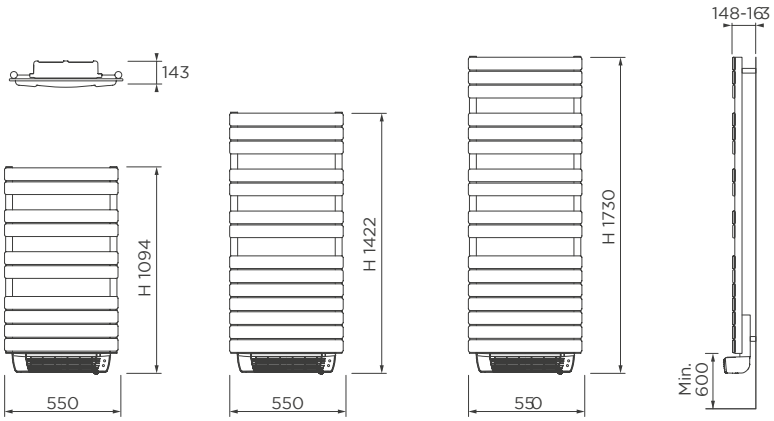

Dimensions are in millimeters (mm)

AGATA E-Flow White

Image for illustrative purposes only

Code with plug	Code without plug	Height	Width	Depth	Weight	Towel warmer power	Fan heater power
EUROPLUG (CEE 7/17)		H (mm)	L (mm)	(mm)	kg	W	W
0PR1TR0521160S5	0PDRTR0521160S5	1203	600	143	20,5	500	1000
0PR1TR0521460S7	0PDRTR0521460S7	1528	600	143	26,5	700	1000
0PR1TR0521760S1	0PDRTR0521760S1	1852	600	143	31,5	1000	1000

Technical specifications
Material: UNI EN 10130:2007 steel
Straight flat tubes
Round manifolds diameter 38 mm
Mains power supply supported: 230V AC, 50Hz
Class 2, IP24

Mode and functions

For operating modes see chapter Mode and Functions.

Standard supply:
- white digital remote control
- fixing kit
- white cable, 1200 mm long, with plug
- white cable, 900 mm long, without plug

Dimensions are in millimeters (mm)

AGATA E-Flow Anthracite

Image for illustrative purposes only

Code with plug	Code without plug	Height	Width	Depth	Weight	Towel warmer power	Fan heater power
EUROPLUG (CEE 7/17)		H (mm)	L (mm)	(mm)	kg	W	W
0PR1TR3521160S5	0PDRTR3521160S5	1203	600	143	20,5	500	1000
0PR1TR3521460S7	0PDRTR3521460S7	1528	600	143	26,5	700	1000
0PR1TR3521760S1	0PDRTR3521760S1	1852	600	143	31,5	1000	1000

Technical specifications
Material: UNI EN 10130:2007 steel
Straight flat tubes
Round manifolds diameter 38 mm
Mains power supply supported: 230V AC, 50Hz
Class 2, IP24

Mode and functions

For operating modes see chapter Mode and Functions.

Standard supply:
- anthracite digital remote control
- fixing kit
- black cable, 1200 mm long, with plug
- black cable, 900 mm long, without plug

Dimensions are in millimeters (mm)

WINNER E-Flow White

Image for illustrative purposes only

Code with plug	Code without plug	Height	Width	Depth	Weight	Towel warmer power	Fan heater power
EUROPLUG (CEE 7/17)		H (mm)	L (mm)	(mm)	kg	W	W
0SR1FO0550855S5	0SDRFO0550855S5	985	550	143	18,5	500	1000

Technical specifications
Material: UNI EN 10130:2007 steel
Straight flat tubes
Semioval manifolds 40 x 30 mm
Mains power supply supported: 230V AC, 50Hz
Class 2, IP24

Mode and functions

For operating modes see chapter Mode and Functions.

Standard supply:
- white digital remote control
- fixing kit
- white cable, 1200 mm long, with plug
- white cable, 900 mm long, without plug

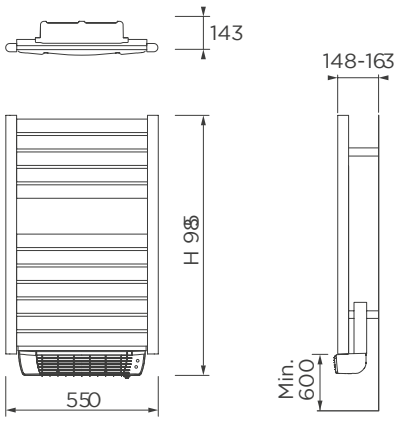

Dimensions are in millimeters (mm)

WINNER E-Flow Anthracite

Image for illustrative purposes only

Code with plug	Code without plug	Height	Width	Depth	Weight	Towel warmer power	Fan heater power
EUROPLUG (CEE 7/17)		H (mm)	L (mm)	(mm)	kg	W	W
0SR1FO3550855S5	0SDRFO3550855S5	985	550	143	18,5	500	1000

Technical specifications
Material: UNI EN 10130:2007 steel
Straight flat tubes
Semioval manifolds 40 x 30 mm
Mains power supply supported: 230V AC, 50Hz
Class 2, IP24

Mode and functions

For operating modes see chapter Mode and Functions.

Standard supply:
- anthracite digital remote control
- fixing kit
- black cable, 1200 mm long, with plug
- black cable, 900 mm long, without plug

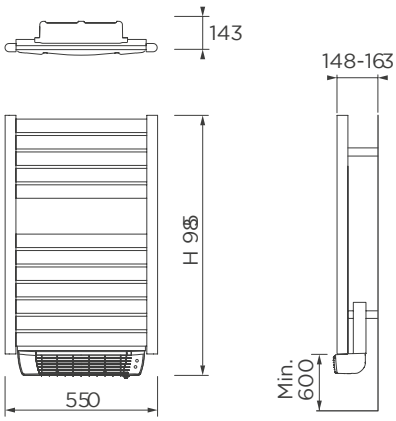

Dimensions are in millimeters (mm)

Hydraulic connections: compatibility accessories/ products, check standard supply.

		Multicolonna	Multicolonna	Multicolonna	Plattella Linear	Towel Warmer
		Standard	Hygiene	Integrated		
	Vent plug 1/2" with O-Ring 1 pc per pack Minimum order 10 pcs **6180002000**	√	√	√	√	√
	Vent plug 3/8" with O-Ring 1 pc per pack Minimum order 10 pcs **550Q865200**	√	√	√		
	Vent plug 3/4" with O-Ring 1 pc per pack Minimum order 10 pcs **550Q004000**	√	√	√		
	Plastic key vent **611454**	√	√	√	√	√
	Blind plug 1/2" without lid To be combined with 550Q866200 1 pc per pack Minimum order 10 pcs **550Q010100**	√	√	√	√	√
	Lid DL Radiators for blind plug 1/2" 1 pc per pack Minimum order 10 pcs **550Q866200**	√	√	√	√	√
	Blind plug 3/8" 1 pc per pack Minimum order 10 pcs **550Q865100**	√				
	Vent plug kit 1/2" + blind plug **5580008900**	√	√	√	√	√
	1/2" - 3/8" reduction with O-Ring **611453**	√	√	√	√	√

Hydraulic connections: compatibility accessories/ products, check standard supply.

		Multicolonna	Multicolonna	Multicolonna	Plattella Linear	Towel Warmer
		Standard	Hygiene	Integrated		
	Blind reduction (cap) painted left 1"1/4 1 pc per pack Minimum order 10 pcs **550Q114000**	√	√			
	Blind reduction (cap) painted right 1"1/4 1 pc per pack Minimum order 10 pcs **550Q214000**	√	√			
	Reduction painted 3/8" left included gasket 1 pc per pack Minimum order 10 pcs **550Q143800**	√	√			
	Reduction painted 3/8" right included gasket 1 pc per pack Minimum order 10 pcs **550Q243800**	√	√			
	Reduction painted 1/4" left included gasket 1 pc per pack Minimum order 10 pcs **550Q141400**	√	√			
	Reduction painted 1/4" right included gasket 1 pc per pack Minimum order 10 pcs **550Q241400**	√	√			
	Reduction painted 1/2" left included gasket 1 pc per pack Minimum order 10 pcs **550Q141200**	√	√			
	Reduction painted 1/2" right included gasket 1 pc per pack Minimum order 10 pcs **550Q241200**	√	√			
	Reduction painted 3/4" left included gasket 1 pc per pack Minimum order 10 pcs **550Q143400**	√	√			
	Reduction painted 3/4" right included gasket 1 pc per pack Minimum order 10 pcs **550Q243400**	√	√			
	Reduction painted 1" left included gasket 1 pc per pack Minimum order 10 pcs **550Q141000**	√	√			
	Reduction painted 1" right included gasket 1 pc per pack Minimum order 10 pcs **550Q241000**	√	√			

Hydraulic connections: compatibility accessories/ products, check standard supply.

		Multicolonna	Multicolonna	Multicolonna	Plattella Linear	Towel Warmer
		Standard	Hygiene	Integrated		
	Silicone seal for reductions and plugs 1"1/4 1 pc per pack **550Q004200**	√	√	√		
	Nipple 1"1/4 1 pc per pack **550Q002900**	√				
	Nipple 1"1/4 1 pc per pack **550Q004800**		√			
	Silicone seal for nipple 1 pc per pack **550Q003000**	√	√	√		
	Ring for nippling 1 pc per pack **610Q001000**		√			
	Plastic key for mounting reductions **550Q003100**	√	√			
	Reductions 1/2" and caps (connections 99) **730Q001800**	√	√			
	Reductions 3/8" and caps (connections 99) **730Q001900**	√	√			

Hydraulic connections: compatibility accessories/ products, check standard supply.

		Multicolonna	Multicolonna	Multicolonna	Plattella Linear	Towel Warmer
		Standard	Hygiene	Integrated		
	Septum with spring for two-pipe installation (connections 99) **550Q010000**	√	√			
	Septum with spring hole 11,5 mm **550Q009400**	√	√			
	Septum with spring hole 12,5 mm **550Q009500**	√	√			
	Septum with spring hole 14,5 mm **550Q009600**	√	√			
	Septum with spring hole 16,5 mm **550Q009700**	√	√			
	Septum with spring hole 18,5 mm **550Q009800**	√	√			
	Septum with spring hole 19,5 mm **550Q009900**	√	√			

Hydraulic connections: compatibility accessories/ products, check standard supply.

		Multicolonna	Multicolonna	Multicolonna	Plattella Linear		Towel Warmer
		Standard	Hygiene	Integrated			
	Mobile flow diverter (1/2" thread) **550Q002800**	√	√				
	Centre distance valve 50 attacks 3/4"F - 3/4"EK upright connections **5580124600**			√			
	Centre distance valve 50 attacks 3/4"F - 3/4"EK "L" connections **5580124500**			√			
	Straight distributor - ONE-PIPE (3/4") **5580008200**				C4 C6	V6 √	
	"L" distributor - ONE-PIPE (3/4") **5580008300**				C4 C6	V6 √	
	Straight distributor - TWO-PIPE **5580013600**				C4 C6	V6 √	
	"L" distributor - TWO-PIPE (3/4") **5580013700**				C4 C6	V6 √	
	Straight distributor - TWO-PIPE prepared for radiator exhaust (3/4") **5580103500**				C4 C6	V6 √	
	"L" distributor - TWO-PIPE prepared for radiator exhaust (3/4") **5580103600**				C4 C6	V6 √	

Hydraulic connections: compatibility accessories/ products, check standard supply.

		Multicolonna	Multicolonna	Multicolonna	Plattella Linear		Towel Warmer
		Standard	Hygiene	Integrated			
	Chrome kit (valve group/stops centre distance 50 mm) two-pipe (1/2" - 3/4") left output **5567001000**	√			C6 √	V6	
	Kit 2 eurocons **5580009500**			√			
	Adapter M30x1,5mm for thermostatically controlled valves Type Danfoss (M23,5x1,5mm) **550S103900**			√	C4 C6	V6 √	
	Thermostatic head (M23,5x1,5) **5580104900**			√	C4 C6	V6 √	
	Thermostatic head M30X1,5 Bianca **550S105710**	√	√	√	√		√
	Thermostatic head M30X1,5 Cromo **550S105610**	√	√	√	√		√
	Kit White thermostat unit valve and holder, connection for copper or plastic pipe Ø24x19" **550S105110**	√	√		√		√
	Kit Chrome thermostatable to the team valve and holder, connection for copper or plastic pipe Ø24x19" **550S105010**	√	√		√		√
	Special pipe centre kit **5580128000**				C4 C6	V6 √	

Hydraulic connections: compatibility accessories/ products, check standard supply.

		Multicolonna	Multicolonna	Multicolonna	Plattella Linear		Towel Warmer
		Standard	Hygiene	Integrated			
	Thermostatable insert M23x1,5 **550Q212110**			√			
	Thermostatable insert M30x1,5 **5580140000**				C4 C6	V6 √	
	Thermostatable insert (presetting NN) M23x1,5 **5580139900**				C4 C6	V6 √	
	3/4" x 10 mm connector for copper pipe for one e two-pipe distributor **5580010100**			√	C4 C6	V6 √	
	3/4" x 12 mm connector for copper pipe for one e two-pipe distributor **5580010200**			√	C4 C6	V6 √	
	3/4" x 14 mm connector for copper pipe for one e two-pipe distributor **5580010400**			√	C4 C6	V6 √	
	3/4" x 15 mm connector for copper pipe for one e two-pipe distributor **5580010500**			√	C4 C6	V6 √	
	3/4" x 16 mm connector for copper pipe for one e two-pipe distributor **5580010600**			√	C4 C6	V6 √	
	3/4" x 18 mm connector for copper pipe for one e two-pipe distributor **5580010700**			√	C4 C6	V6 √	

Hydraulic connections: compatibility accessories/ products, check standard supply.

		Multicolonna	Multicolonna	Multicolonna	Plattella Linear		Towel Warmer
		Standard	Hygiene	Integrated			
	Multilayer pipe connection (3/4"x18)x14/10 **5580127000**			√	C4 C6	V6 √	
	Multilayer pipe connection (3/4"x18)x16/12 **5580127100**			√	C4 C6	V6 √	
	Multilayer pipe connection (3/4"X18)X20/16 **5580127200**			√	C4 C6	V6 √	
	Copper connection 24/19 x 10 for valve and lockshield **550S300700**	√	√		C4 C6 √	V6	√
	Copper connection 24/19 x 12 for valve and lockshield (2 pcs) **550S103600**	√	√		C4 C6 √	V6	√
	Copper connection 24/19 x 14 for valve and lockshield **550S300900**	√	√		C4 C6 √	V6	√
	Copper connection 24/19 x 15 for valve and lockshield **550S301000**	√	√		C4 C6 √	V6	√
	Copper connection 24/19 x 16 for valve and lockshield **550S301100**	√	√		C4 C6 √	V6	√
	Multilayer connection 24/19 x 9,5/10-14 for valve and lockshield **550S300400**	√	√		C4 C6 √	V6	√
	Multilayer connection 24/19 x 11,5/12-16 for valve and lockshield **550S300500**	√	√		C4 C6 √	V6	√
	Multilayer connection 24/19 x 15,5/16-20 for valve and lockshield **550S300600**	√	√		C4 C6 √	V6	√

Hydraulic connections: compatibility accessories/ products, check standard supply.

		Multicolonna	Multicolonna	Multicolonna	Plattella Linear	Towel Warmer
		Standard	Hygiene	Integrated		
	Touch-up sticks for aesthetic White RAL 9016 **552338**	√	√	√	√	√
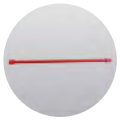	Nippling key **550Q864800**	√	√			

Technical informations for hydraulic connection - HYDRONIC TOWEL WARMER

Each towel warmer must be connected to the system with a valve and lockshield (or an integrated valve/lockshield kit with 50mm pipe centre in the case of radiators with central connection).

Each towel warmer must have a vent plug (always included in the package) at the top for venting.

All towel warmers must be connected with the supply and return pipes from the bottom (they cannot be connected with pipes from the top).

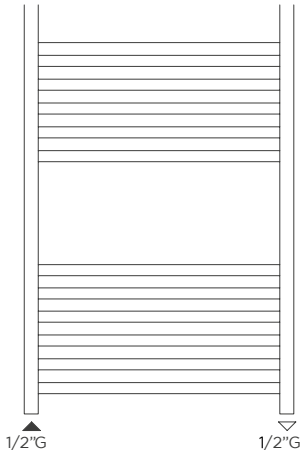

Standard connections

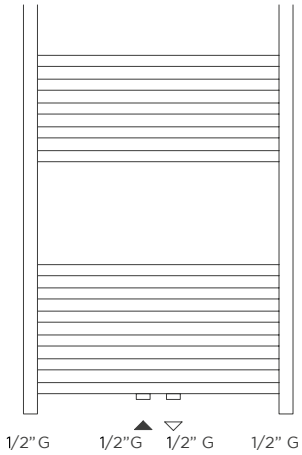

AD - Central connections

One-pipe connection

Perpendicular connections from the bottom.

One-pipe installation with perpendicular connections requires:
- one-pipe valve (a) with adjustable bypass;
- the probe (b) must be inserted in the vertical manifold and must have a length equivalent to 2/3 the height (H) of the radiator in order to release the hot output water at a sufficient height.

The one-pipe valve can be straight or L-shaped to allow bottom or side connection.

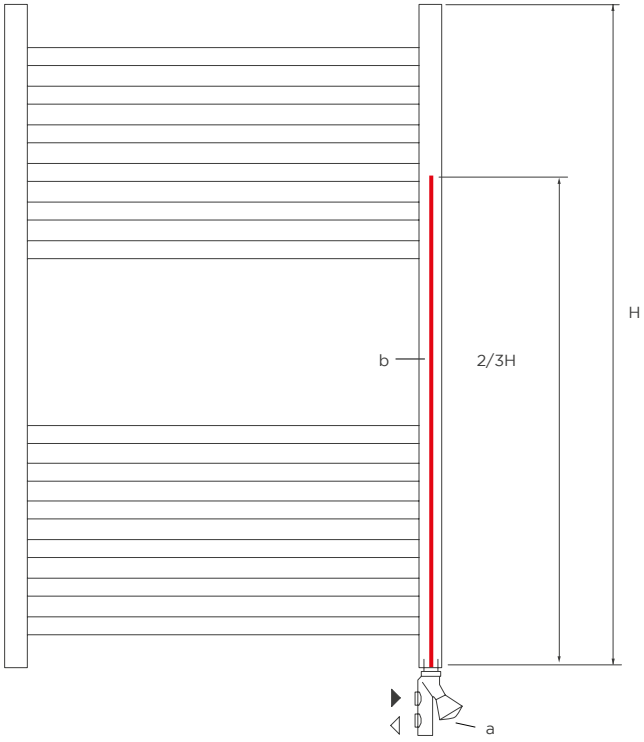

Wall and floor fixing kit - MULTICOLONNA

		Multicolonna Standard	Multicolonna Hygiene	Multicolonna Integrated
	GBT brackets (2 pcs per box) including 2 N6 supports, 2 QKS covers (and dowels) and key vent			
	550Q020000 - White	√	√	√
	550Q061000 - Colored	√	√	√
	R12V shelf (2 pcs per box) To be ordered with spacer N5			
	550Q001600 -R12V bracket 50-80 for 2 columns	√	√	√
	550Q001700 - R12V bracket 80-110 for 3-4 columns	√	√	√
	550Q001800 - R12V bracket 110-150 for 5-6 columns	√	√	√
	Spacer N5 (1 pcs per pack)			
	550Q000900	√	√	√
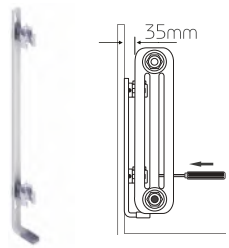	GTX brackets (2 pc per box)			
	550Q040100 - H. 300 - 350	√	√	√
	550Q040200 - H. 350 - 450	√	√	√
	550Q040300 - H. 500 - 700	√	√	√
	550Q040400 - H. 750 - 1000	√	√	√
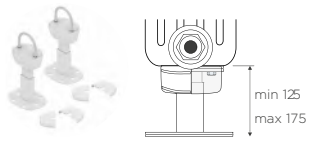	Foot PGT60 with foot cover (2 pcs per pack)			
	550Q003600 - White	√	√	√

Note

Wall fixing kit - PLATTELLA

For fixing dimensions see page 98-99

		C4 Compact				C4 Special	
		11	21	22	33	22	33
For versions with L < 1600 mm	GB1 brackets (2 pcs per box) Including screws, dowels, vent and blind cap						
	5580080500 - H. 300	√	√	√	√		
	5580080600 - H. 400	√	√	√	√		
	5580080700 - H. 500	√	√	√	√		
	5580080800 - H. 600	√	√	√	√		
	5580080900 - H. 700	√	√	√	√		
	5580081000 - H. 900	√	√	√	√		
	5580107900 - H. 1400						
	5580108000 - H. 1600						
	5580108100 - H. 1800						
	5580108200 - H. 2000						
	5580108300 - H. 2200						
	5580108500 - H. 2400						
For versions with L > 1600 mm	GB1 brackets (3 pcs per box) Including screws, dowels, vent and blind cap						
	5580081100 - H. 300	√	√	√	√		
	5580081200 - H. 400	√	√	√	√		
	5580081300 - H. 500	√	√	√	√		
	5580081400 - H. 600	√	√	√	√		
	5580081500 - H. 700	√	√	√	√		
	5580081600 - H. 900	√	√	√	√		
1 kit with L < 1600 mm, 2 kits with L > 1600 mm *1 kit per product	D3 with spacers NS (2 pcs per pack) Distance from wall 32 MM						
	552919 **H. 300/400/500/600/700/900**	√	√	√	√		
1 kit with L < 1600 mm, 2 kits with L > 1600 mm	D30 with spacers NS (2 pcs per pack) Distance from wall 45 MM						
	5580005300 **H. 300/400/500/600/700/900**						

Wall fixing kit - PLATTELLA

V6L				V6C				V8				C4 Hygiene			V6 Hygiene			C6 Vertical				
11	21	22	33	11	21	22	33	11	21	22	33	10	20	30	10	20	30	10	20	22	22	
√				√									√	√								
√				√									√	√								
√				√									√	√								
√				√									√	√								
√				√									√	√								
√				√									√	√								
																			√	√	√	
																			√	√	√	
																			√	√	√	
																			√	√	√	
																			√	√	√	
																			√	√	√	
√				√									√	√								
√				√									√	√								
√				√									√	√								
√				√									√	√								
√				√									√	√								
√				√									√	√								
													√	√				√[*1]				
												√			√							

Wall fixing kit - PLATTELLA

For fixing dimensions see page 98-99

		C4 Compact				C4 Special	
		11	21	22	33	22	33
	Brackets F7 (2 pcs per box) Including screws and dowels						
	5580142900 - H. 300						
	5580143000 - H. 400						
	5580143100 - H. 500						
	5580143200 - H. 600					√	√
	5580143300 - H. 700					√	√
	5580143400 - H. 900						

Wall fixing kit - PLATTELLA

V6L				V6C				V8				C4 Hygiene			V6 Hygiene			C6 Vertical				
11	21	22	33	11	21	22	33	11	21	22	33	10	20	30	10	20	30	10	20	22	22	
	√	√	√		√	√	√									√	√					
	√	√	√		√	√	√									√	√					
	√	√	√		√	√	√									√	√					
	√	√	√		√	√	√									√	√					
	√	√	√		√	√	√									√	√					
	√	√	√		√	√	√									√	√					

Floor fixing kit - PLATTELLA

		C4 Compact				C4 Special	
		11	21	22	33	22	33
	Kit QN1						
	5580005700			√	√	√	√
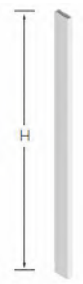	QT tube						
	552309 - H. 300			√	√	√	√
	552310 - H. 400			√	√	√	√
	552311 - H. 500			√	√	√	√
	552312 - H. 600			√	√	√	√
	552649 - H. 700			√	√	√	√
	552313 - H. 900			√	√	√	√
	QB base for QT tube						
	552314			√	√	√	√
	Base cover QK						
	552315			√	√	√	√

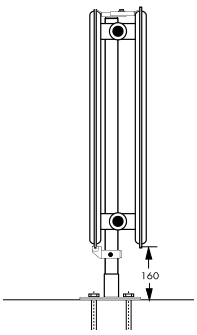

Kit QT with QN1

Floor fixing kit - PLATTELLA

V6L				V6C				V8				C4 Hygiene			V6 Hygiene			C6 Vertical				
11	21	22	33	11	21	22	33	11	21	22	33	10	20	30	10	20	30	10	20	22	22	
		√	√										√	√		√	√					
		√	√										√	√		√	√					
		√	√										√	√		√	√					
		√	√										√	√		√	√					
		√	√										√	√		√	√					
		√	√										√	√		√	√					
		√	√										√	√		√	√					
		√	√										√	√		√	√					
		√	√										√	√		√	√					

Floor fixing kit - PLATTELLA

		C4 Compact				C4 Special	
		11	21	22	33	22	33
	Kit QE						
	552317	√	√	√			
	QT tube						
	552309 - H. 300	√	√	√			
	552310 - H. 400	√	√	√			
	552311 - H. 500	√	√	√			
	552312 - H. 600	√	√	√			
	552649 - H. 700	√	√	√			
	552313 - H. 900	√	√	√			
	QBX base for QT tube						
	550Q000200	√	√	√			
	Base cover QKX						
	550Q000300	√	√	√			

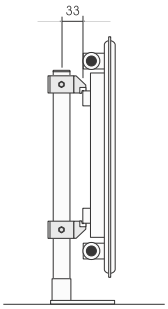

Kit QT with QE

Floor fixing kit - PLATTELLA

V6L				V6C				V8				C4 Hygiene			V6 Hygiene			C6 Vertical				
11	21	22	33	11	21	22	33	11	21	22	33	10	20	30	10	20	30	10	20	22	22	
√				√								√	√		√	√						
√				√								√	√		√	√						
√				√								√	√		√	√						
√				√								√	√		√	√						
√				√								√	√		√	√						
√				√								√	√		√	√						
√				√								√	√		√	√						
√				√								√	√		√	√						
√				√								√	√		√	√						

Floor fixing kit - PLATTELLA

		C4 Compact				C4 Special	
		11	21	22	33	22	33
	Kit 2 adjustable feet PK3 + Base cover QKF H. adjustable floor 150 - 200 mm						
	5580103300	√	√	√	√	√	√
	Kit 2 adjustable feet PX1 + Base cover QKP H. adjustable floor 240 - 315 mm						
	5580124750			√	√	√	√
	Kit 2 adjustable feet PX3 + Base cover QKF H. adjustable floor 120 - 170 mm						
	5580124700			√	√	√	√

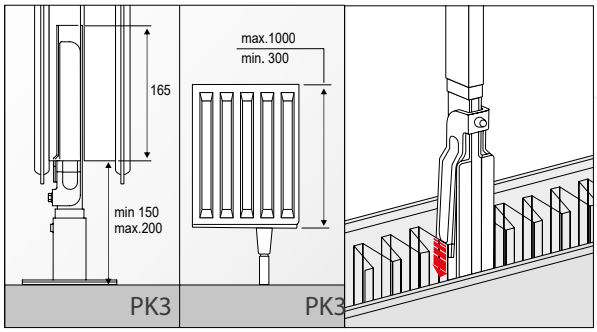

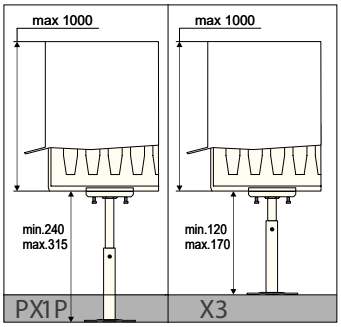

Floor fixing kit - PLATTELLA

V6L				V6C				V8				C4 Hygiene			V6 Hygiene			C6 Vertical				
11	21	22	33	11	21	22	33	11	21	22	33	10	20	30	10	20	30	10	20	22	22	
√	√	√	√																			
	√	√	√										√	√		√	√					
	√	√	√										√	√		√	√					

Info wall fixing kit - PLATTELLA

GB1 BRACKETS

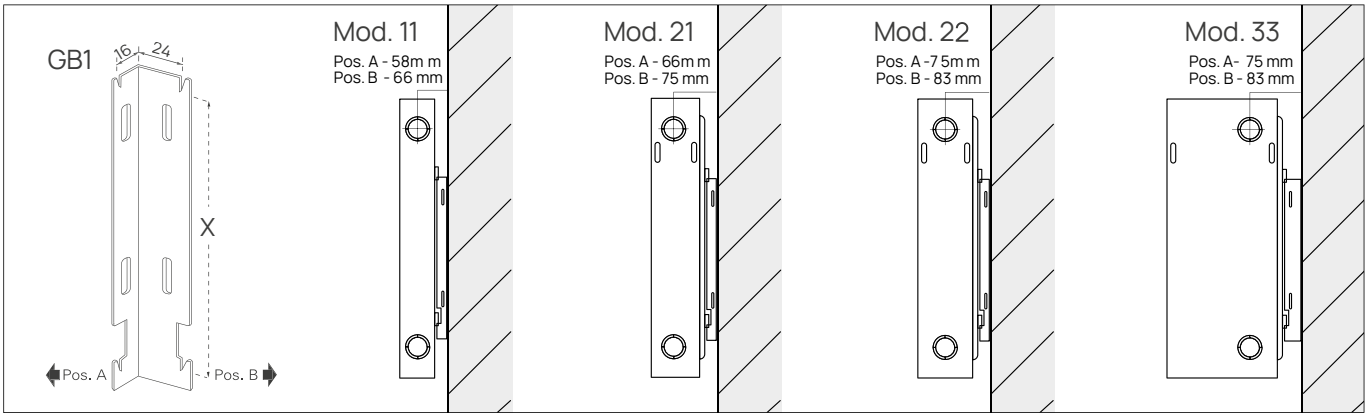

D3 - D30 BRACKETS

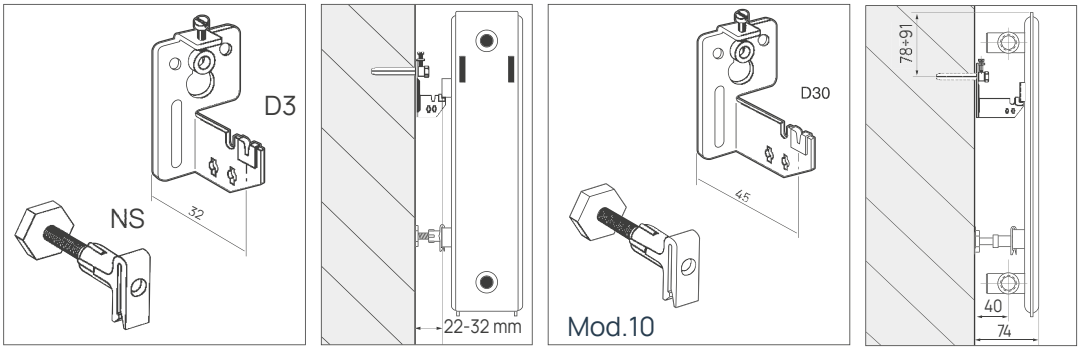

F7 BRACKETS

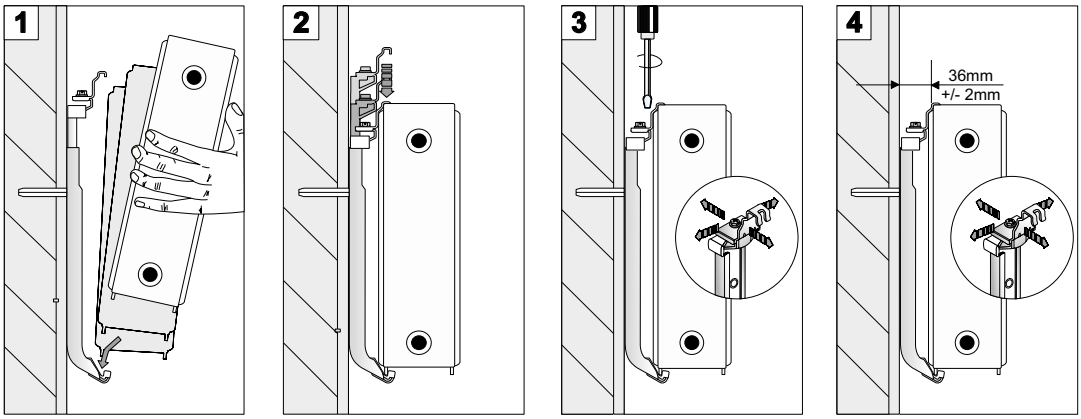

Note

Wall fixing kit - LINEAR

For fixing dimensions see page 158-159

		C4 Compact					C4 Special	
		11	20	21	22	33	22	33
For versions with L < 1600 mm	GB1 brackets (2 pcs per box) Including screws, dowels, vent and blind cap							
	5580080500 - H. 300	√	√	√	√	√		
	5580080600 - H. 400	√	√	√	√	√		
	5580080700 - H. 500	√	√	√	√	√		
	5580080800 - H. 600	√	√	√	√	√		
	5580080900 - H. 700	√	√	√	√	√		
	5580081000 - H. 900	√	√	√	√	√		
	5580107900 - H. 1400							
	5580108000 - H. 1600							
	5580108100 - H. 1800							
	5580108200 - H. 2000							
	5580108300 - H. 2200							
	5580108500 - H. 2400							
For versions with L > 1600 mm	GB1 brackets (3 pcs per box) Including screws, dowels, vent and blind cap							
	5580081100 - H. 300	√	√	√	√	√		
	5580081200 - H. 400	√	√	√	√	√		
	5580081300 - H. 500	√	√	√	√	√		
	5580081400 - H. 600	√	√	√	√	√		
	5580081500 - H. 700	√	√	√	√	√		
	5580081600 - H. 900	√	√	√	√	√		
1 kit with L < 1600 mm, 2 kits with L > 1600 mm	D3 with spacers NS (2 pcs per pack) Distance from wall 32 MM							
	552919 **H. 300/400/500/600/700/900**	√	√	√	√	√		
1 kit with L < 1600 mm, 2 kits with L > 1600 mm	D30 with spacers NS (2 pcs per pack) Distance from wall 45 MM							
	5580005300 **H. 300/400/500/600/700/900**							

Wall fixing kit - LINEAR

V6L					V6C				V8				C4 Hygiene			V6 Hygiene			C6 Vertical			
11	20	21	22	33	11	21	22	33	11	21	22	33	10	20	30	10	20	30	10	20	22	22
√					√									√	√							
√					√									√	√							
√					√									√	√							
√					√									√	√							
√					√									√	√							
√					√									√	√							
																				√	√	√
																				√	√	√
																				√	√	√
																				√	√	√
																				√	√	√
																				√	√	√
√					√								√	√								
√					√								√	√								
√					√								√	√								
√					√								√	√								
√					√								√	√								
√					√								√	√								
														√	√							
													√			√						

Wall fixing kit - LINEAR

Per le quote di fissaggio e dimensioni, consultare pag. 158-159

		C4 Compact					C4 Special	
		11	20	21	22	33	22	33
	Brackets F7 (2 pcs per box) Including screws and dowels							
	5580142900 - H. 300							
	5580143000 - H. 400							
	5580143100 - H. 500							
	5580143200 - H. 600						√	√
	5580143300 - H. 700						√	√
	5580143400 - H. 900							

Wall fixing kit - LINEAR

V6L					V6C				V8				C4 Hygiene			V6 Hygiene			C6 Vertical			
11	20	21	22	33	11	21	22	33	11	21	22	33	10	20	30	10	20	30	10	20	22	22
	√	√	√	√		√	√	√									√	√				
	√	√	√	√		√	√	√									√	√				
	√	√	√	√		√	√	√									√	√				
	√	√	√	√		√	√	√									√	√				
	√	√	√	√		√	√	√									√	√				
	√	√	√	√		√	√	√									√	√				

Floor fixing kit - LINEAR

		C4 Compact					C4 Special	
		11	20	21	22	33	22	33
	Kit QN1							
	5580005700				√	√	√	√
	QT tube							
	552309 - H. 300				√	√	√	√
	552310 - H. 400				√	√	√	√
	552311 - H. 500				√	√	√	√
	552312 - H. 600				√	√	√	√
	552649 - H. 700				√	√	√	√
	552313 - H. 900				√	√	√	√
	QB base for QT tube							
	552314				√	√	√	√
	Base cover QK							
	552315				√	√	√	√

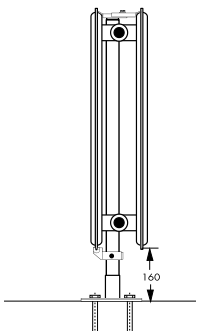

Kit QT with QN1

Floor fixing kit - LINEAR

V6L					V6C				V8				C4 Hygiene			V6 Hygiene			C6 Vertical			
11	20	21	22	33	11	21	22	33	11	21	22	33	10	20	30	10	20	30	10	20	22	22
			√	√										√	√		√	√				
			√	√										√	√		√	√				
			√	√										√	√		√	√				
			√	√										√	√		√	√				
			√	√										√	√		√	√				
			√	√										√	√		√	√				
			√	√										√	√		√	√				
			√	√										√	√		√	√				
			√	√										√	√		√	√				

Floor fixing kit - LINEAR

		C4 Compact					C4 Special	
		11	20	21	22	33	22	33
	Kit QE							
	552317	√	√	√	√			
	QT tube							
	552309 - H. 300	√	√	√	√			
	552310 - H. 400	√	√	√	√			
	552311 - H. 500	√	√	√	√			
	552312 - H. 600	√	√	√	√			
	552649 - H. 700	√	√	√	√			
	552313 - H. 900	√	√	√	√			
	QBX base for QT tube							
	550Q000200	√	√	√	√			
	Base cover QKX							
	550Q000300	√	√	√	√			

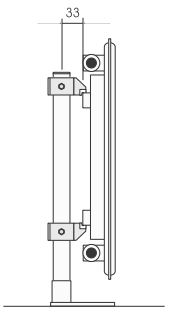

Kit QT with QE

Floor fixing kit - LINEAR

V6L					V6C				V8				C4 Hygiene			V6 Hygiene			C6 Vertical			
11	20	21	22	33	11	21	22	33	11	21	22	33	10	20	30	10	20	30	10	20	22	22
√					√								√	√		√	√					
√					√								√	√		√	√					
√					√								√	√		√	√					
√					√								√	√		√	√					
√					√								√	√		√	√					
√					√								√	√		√	√					
√					√								√	√		√	√					
√					√								√	√		√	√					
√					√								√	√		√	√					

Floor fixing kit - LINEAR

		C4 Compact					C4 Special	
		11	20	21	22	33	22	33
	Kit 2 adjustable feet PK3 + Base cover QKF H. adjustable floor 150 - 200 mm							
	5580103300	√	√	√	√	√	√	√

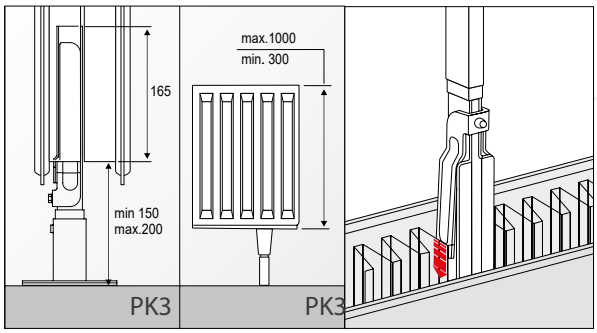

Floor fixing kit - LINEAR

V6L					V6C				V8				C4 Hygiene			V6 Hygiene			C6 Vertical			
11	20	21	22	33	11	21	22	33	11	21	22	33	10	20	30	10	20	30	10	20	22	22
√	√	√	√	√																		

Info wall fixing kit - LINEAR

GB1 BRAKETS

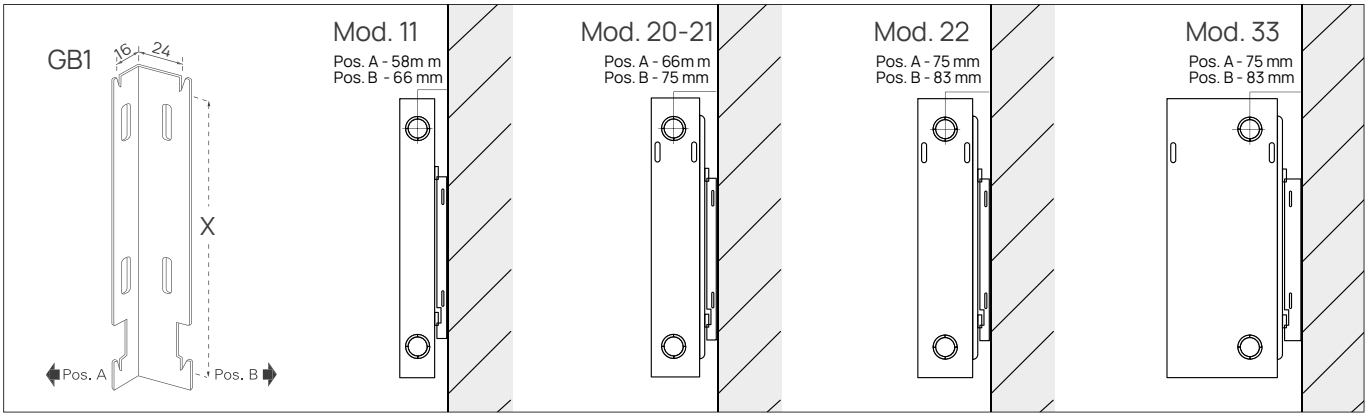

D3 - D30 BRAKETS

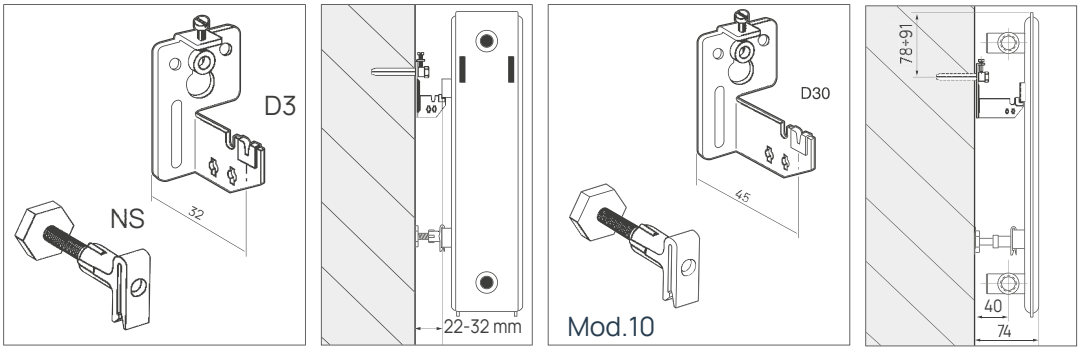

F7 BRAKETS

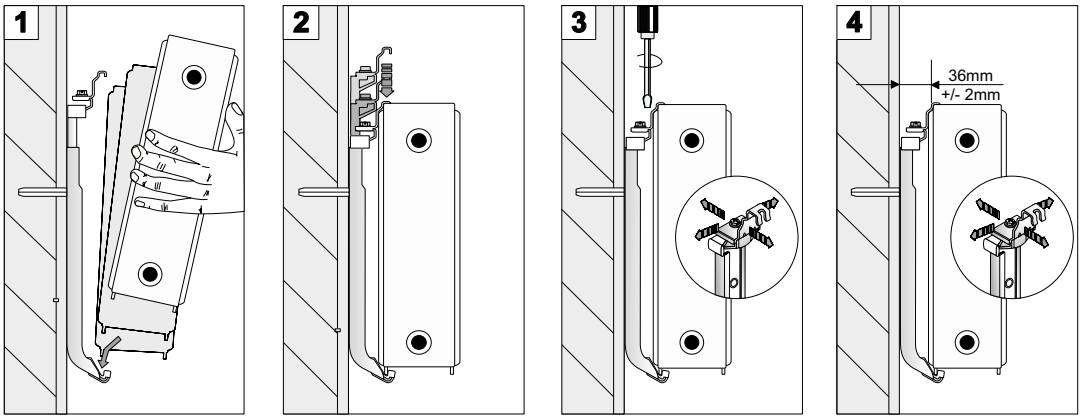

Note

Fixing kit - TOWEL WARMER

For hydronic models the package also includes a 1/2" vent plug

		Fantasia	Fantasia Digit/OnOff	Fantasia Dry	Unique	Cortina
	Kit 3 brackets included					
	99AT0032 - White					
	99AT0043 - Chrome					
	Kit 3 brackets included					
	550S012000 - White					√
	Kit 4 brackets included					
	550S019300 - White	√				
	550S007310 - Anthracite	√	√			
	550S019400 - Chrome	√	√			
	Kit 4 brackets included					
	550S022700 - White			√		
	Kit 4 brackets included					
	550S023000 - White				√	
	550S023100 - Chrome				√	
	Kit 4 brackets included					
	550S023300 - White					
	550S023400 - Chrome					
	Kit 4 brackets included					
	550S005900 - White					
	550S005950 - Chrome					
	Kit 4 brackets included					
	550S004600 - White					
	550S005000 - Chrome					
	Kit 3 brackets included					
	550S003200 - White					
	Kit 3 brackets included					
	550S023000 - White					
	550S023100 - Chrome					
	Kit 4 brackets included					
	550S020310 - White		√			

Fixing kit - TOWEL WARMER

Quarzo	Cobalto	Agata	Iridio	Cosy	Loop	Shade	Slash	Winner	String
						√			
√									
√									
	√	√							
	√	√							
			√	√					
			√	√					
								√	
					√		√		√
					√		√		√

Fixing kit - DESIGN

For hydronic models the package also includes a 1/2" vent plug and two 1/2" blind plug

		Stream	Gate	Mirò 10	Mirò 20
	Kit 4 brackets included				
	99AT0095 - White			√	
	550S002100 - Chrome			√	
	Kit 4 brackets included				
	550S009700 - White				√
	550S009800 - Anthracite				√
	Kit 4 brackets included				
	99AT0039 - White				
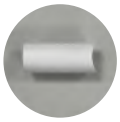	Kit 4 brackets included				
	550S023000 - White	√			
	550S023100 - Chrome	√			
	Kit 4 brackets included				
	550S003500 - White		√		

Kit di fissaggio - RADIATORI ELETTRICI

		Rayo	Cloud	Smooth	Alu simple *PLUS*		Sight	Alyne
	Kit included							
	550S023200	√						
	Kit included fixing bracket 6025222200 4 pz							
	5525200150 1pz		√					
	Kit included							
	550Q050100 - White			√				
	550Q040700 - Anthracite			√				
	Kit included							
	5525210001 - White						√	√
	Kit included for 1000, 1500 w 1 pc per pack				Dry	Fluid		
	5525210011 - White				√			
	5525200072 - Galvanized				√			
	Kit included for 2000 w 2 pcs per pack				Dry	Fluid		
	5525210001 - White				√			
	5525200062 - Galvanized				√			
	Kit included for 700, 1000, 1500, 1800 w				Dry	Fluid		
	5525210001 - White					√		
	5525200072 - Galvanized					√		

Fixing kit - E-FLOW

		Elegance	Cobalto	Agata	Winner
	Kit 4 brackets included				
	550S010400 - White	√			
	550S013901 - Anthracite	√			
	Kit 4 brackets included				
	550S007600 - White		√	√	√
	550S007700 - Anthracite		√	√	√
	550S007650 - Chrome		√		

Note

Accessories - TOWEL WARMERS

		Fantasia	Fantasia Dry	Unique	Cortina
	Clothes rack - 2 pieces				
	5567011610 - White	√	√		
	5567011600 - Chrome	√	√		
	Towel holder				
	550S099100 - White L. 400	√	√		
	99CT00739 - Chrome L. 400	√	√		
	Towel holder				
	99CT00757 - White L. 600	√	√		
	99CT00758 - Chrome L. 600	√	√		
	Towel holder				
	550S099300 - White 3 PEZZI	√	√		
	550S099200 - Anthracite 2 PEZZI	√	√		
	550S099400 - Anthracite 3 PEZZI	√	√		

Accessories - Electric Radiators

		Rayo	Cloud	Smooth	Alu Simple *PLUS* Dry	Alu Simple *PLUS* Fluid	Sight	Alyne
	Smart Plug							
	55250200000 - White	√						

Accessories - Electric TOWEL WARMERS

		Fantasia Digital	Fantasia On/Off	Fantasia DRY	Unique On/Off	Cortina On/Off	Cobalto Digital	Agata Digital	Iridio Digital	Winner Digital
	Smart Plug									
	55250200000 - White		√		√	√				

Accessories - TOWEL WARMERS

Quarzo	Cobalto	Agata	Iridio	Cosy	Loop	Shade	Slash	Winner	String
			√	√					
			√	√					
			√	√					
			√	√					
			√	√					
			√	√					
	√	√	√	√					
	√	√	√	√					
	√	√	√	√					

Hydronic - Electric Conversion Kit - TOWEL WARMERS

	Resistance with Schuko plug - Class 1 Cable length 1200 mm
	7367000100 - White W. 400
	7367000200 - White W. 700
	7367000300 - White W. 1000
	7367001100 - White W. 1500
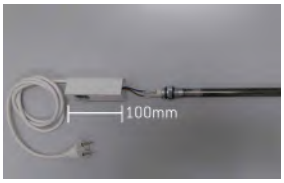	Resistance with Schuko plug and ON/OFF switch - Class 1 Cable length 1200 mm
	550S100800 - White W. 200
	550S100900 - White W. 300
	550S101000 - White W. 400
	550S101100 - White W. 500
	550S101200 - White W. 600
	550S101300 - White W. 700
	550S101400 - White W. 900
	550S101500 - White W. 1000
	550S101600 - White W. 1250
	730S000400 - Grey W. 300
	730S000100 - Grey W. 400
	730S000200 - Grey W. 700
	730S000300 - Grey W. 1000
	Resistance with digital thermostat - Class 2 With Schuko plug
	550S204400 - White 300 Watt
	550S204500 - White 400 Watt
	550S204600 - White 500 Watt
	550S204700 - White 600 Watt
	550S204800 - White 700 Watt
	550S204900 - White 750 Watt
	550S205000 - White 900 Watt
	550S205100 - White 1000 Watt
	550S205200 - White 1250 Watt
	Resistance with digital thermostat - Class 2 Without Schuko plug
	550S201900 - White 300 Watt
	550S202000 - White 400 Watt
	550S202100 - White 500 Watt
	550S202200 - White 600 Watt
	550S202300 - White 700 Watt
	550S202400 - White 750 Watt
	550S202500 - White 900 Watt
	550S202600 - White 1000 Watt
Image for illustrative purposes only	**550S202700 - White 1250 Watt**

Hydronic - Electric Conversion Kit - TOWEL WARMERS

Image for illustrative purposes only	Resistance with digital thermostat - Class 2 With Schuko plug
	550S206000 - Anthracite 300 Watt
	550S206100 - Anthracite 400 Watt
	550S206200 - Anthracite 500 Watt
	550S206300 - Anthracite 600 Watt
	550S206400 - Anthracite 700 Watt
	550S206500 - Anthracite 750 Watt
	550S206600 - Anthracite 900 Watt
	550S206700 - Anthracite 1000 Watt
	550S206800 - Anthracite 1250 Watt
	Resistance with digital thermostat - Class 2 Without Schuko plug
	550S203500 - Anthracite 300 Watt
	550S203600 - Anthracite 400 Watt
	550S203700 - Anthracite 500 Watt
	550S203800 - Anthracite 600 Watt
	550S203900 - Anthracite 700 Watt
	550S204000 - Anthracite 750 Watt
	550S204100 - Anthracite 900 Watt
	550S204200 - Anthracite 1000 Watt
	550S204300 - Anthracite 1250 Watt
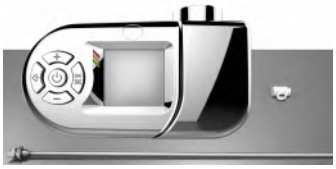 Image for illustrative purposes only	Resistance with digital thermostat - Class 2 With Schuko plug
	550S205300 - Chrome 300 Watt
	550S205400 - Chrome 400 Watt
	550S205500 - Chrome 500 Watt
	550S205600 - Chrome 600 Watt
	550S205700 - Chrome 700 Watt
	550S205800 - Chrome 1000 Watt
	550S205900 - Chrome 1250 Watt
	Resistance with digital thermostat - Class 2 Without Schuko plug
	550S202800 - Chrome 300 Watt
	550S202900 - Chrome 400 Watt
	550S203000 - Chrome 500 Watt
	550S203100 - Chrome 600 Watt
	550S203200 - Chrome 700 Watt
	550S203300 - Chrome 1000 Watt
	550S203400 - Chrome 1250 Watt
	T fitting
	99CT006 - White
	99CT005 - Chrome
	Remote control
	5525010782 - White
	5525010792 - Anthracite

Electrical devices

The T piece has a 1/2" connection and must be connected to the valve (outflow point) of the radiator, while the lockshield must be connected to the opposite point of the radiator, as in the figure.

The radiator is thus always connected to the building's heating system and can be heated either with hot water from the installation or the electrical heating element in the kit. With the electrification kit, the installation must respect the following points:
Respect the following minimum distances when installing electric towel warmers:
- 600 mm from the floor to the thermostat (recommended)
- 50 mm between the radiator and the side wall
- from 50 to 70 mm between the back of the radiator and the wall

The radiator must never in any circumstances be installed:
- inside zone 1
- inside zone 2, if the control panel is accessible to someone having a shower or bath.

It must also be installed so that:
- it is not immediately under a power socket
- the pipes or cables cannot be damaged

The radiator must not be installed with the thermostat facing upwards. Respect the colours of the wires when connecting the appliance to the mains power supply.

Brown = Phase Blue/Grey = Neutral Black = Pilot Wire

If the home does not have a pilot wire system, the black wire must be cut. It must under no circumstances be connected to the earth connection.

For electrical connection, follow the further instructions given for installing electric towel warmers and fan radiators.
The electrical connection must be located at least 250 mm from the floor.

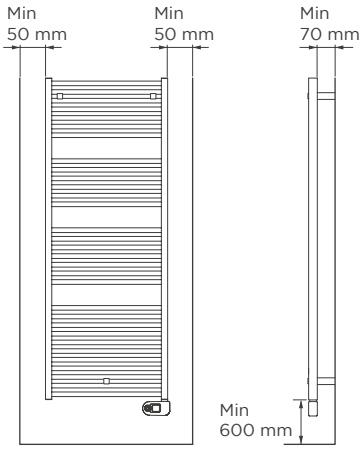

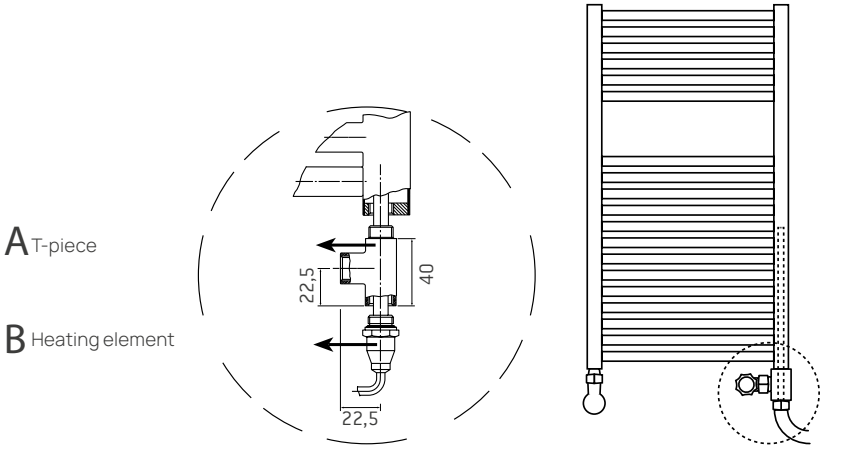

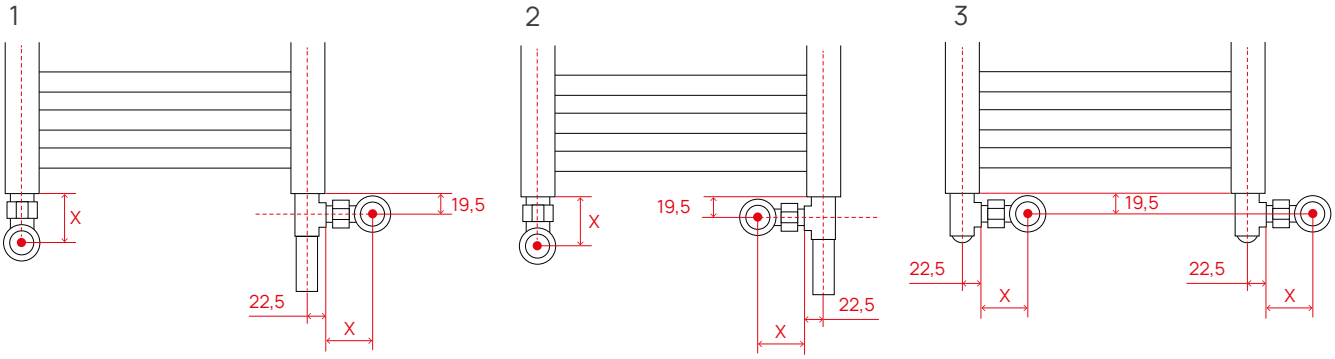

Dimension X for lockshields and valves in range = 45 mm

In installation methods 1 and 2 (see drawing), the wall connection point of the valve is at a different height from the lockshield connection point and is also shifted horizontally towards the inside or outside. This alters the distance between the two connection points. In installation method 3 (see drawing), the height of the two connection points is the same, as is the distance between them, but there is a shift to the right or left of 22.5 + X mm (thus 67.5 mm with the accessories in the Radiators range). On the other hand, if the lockshield and valve are both situated internally (or externally) with respect to the manifolds, the distance between them is reduced (or increased) by 45 + 2X mm (thus 135 mm with the accessories in the RADIATORS range).

Installation

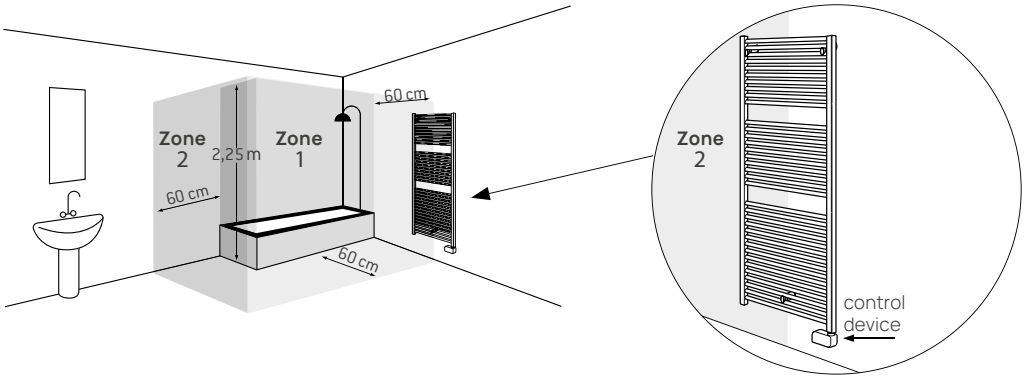

Warnings for electrical connection

Make sure the power supply line is equipped with a device allowing the appliance (including the pilot wire if present) to be disconnected from the household mains, in compliance with the regulations in force. If installing in a bathroom, the power line must be equipped with a high sensitivity differential protection device with a rated differential tripping current of 30 mA. The power supply line and pilot wire control unit must be protected with the same differential.

The electrical connections must be located inside a junction box. In the case of wet rooms (kitchen, bathroom), the appliance must be connected to the circuit at a height of at least 25 cm from the floor. Strictly observe the electrical connection diagram in figure 1 (towel warmer without plug). If the pilot wire is not connected to the programming unit, it must be terminated and isolated. Do not under any circumstances connect the pilot wire to the earth. Make sure the power cable cannot come into contact with the surface of the appliance in any way (Fig.2).

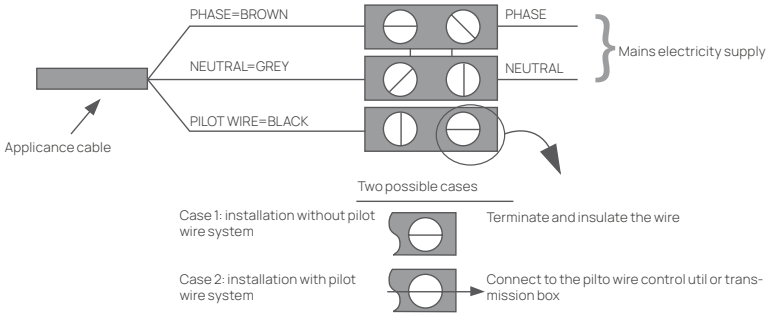

1

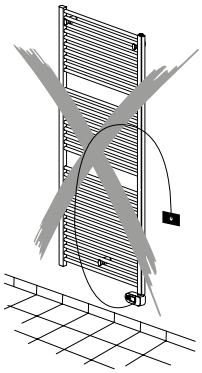

2

Mode and functions electrical devices

	Fantasia	Fantasia On/Off	Fantasia Dry	Unique On/Off	Cortina On/Off	Cobalto	Agata	Iridio	Winner	Rayo
Override 2h	√	-	-	-	-	√	√	√	√	-
Child Safety	√	-	-	-	-	√	√	√	√	-
Holiday	√	-	-	-	-	√	√	√	√	-
Open Window	√	-	√	-	-	√	√	√	√	-
ASC	√	-	-	-	-	√	√	√	√	-
Keypad lock	√	-	-	-	-	√	√	√	√	-
Behavioural indicator	√	-	-	-	-	√	√	√	√	-
Instantaneous power indicator	√	-	-	-	-	√	√	√	√	-
"Eye" presence detector	-	-	-	-	-	-	-	-	-	-
Fan heater	-	-	-	-	-	-	-	-	-	-
Cycle	-	-	-	-	-	-	-	-	-	-
Operation with remote control	-	-	-	-	-	-	-	-	-	-
Standby	√	-	√	-	-	√	√	√	√	-
Pilot wire	√	-	√	-	-	√	√	√	√	-
Comfort	√	-	√	-	-	√	√	√	√	-
Chrono	√	-	√	-	-	√	√	√	√	-
Night/Eco	√	-	√	-	-	√	√	√	√	-
Anti-Freeze	√	-	√	-	-	√	√	√	√	-
Energy Saving	√	-	-	-	-	√	√	√	√	-

Mode and functions electrical devices

	Cloud	Smooth	Alu Simple *PLUS* Dry	Alu Simple *PLUS* Fluide	Sight	Alyne Fluid	Elegance E-Flow	Cobalto E-Flow	Agata E-Flow	Winner E-Flow
Override 2h	-	√	√	√	√	√	√	√	√	√
Child Safety	√	√	√	√	√	√	√	√	√	√
Holiday	-	-	-	-	-	√	-	-	-	-
Open Window	√	√	√	√	√	√	√	√	√	√
ASC	√	√	-	-	√	√	-	-	-	--
Keypad lock	√	√	√	√	√	√	√	√	√	√
Behavioural indicator	-	-	-	-	-	-	-	-	-	-
Instantaneous power indicator	-	-	-	-	-	-	-	-	-	-
"Eye" presence detector	-	-	-	-	√	-	-	-	-	-
Fan heater	-	-	-	-	-	-	√	√	√	√
Cycle	-	-	-	-	-	-	√	√	√	√
Operation with remote control	-	√	√	√	-	-	√	√	√	√
Standby	√	√	√	√	√	√	√	√	√	√
Pilot wire	√	√	√	√	√	√	√	√	√	√
Comfort	√	√	√	√	√	√	√	√	√	√
Chrono	√	√	√	√	√	√	√	√	√	√
Night/Eco	√	√	√	√	√	√	√	√	√	√
Anti-Freeze	√	√	√	√	√	√	√	√	√	√
Energy Saving	-	√	-	√	√	-	-	-	-	-

Mode and functions electrical devices

ASC

This function detects the inertia of the room to reach the set temperature and turns the appliance on earlier to make sure the "Comfort" temperature is reached at the set time.

Override 2h

The appliance heats for two hours at maximum power, irrespective of the set temperature. Two hours after activation, the "Override (2h)" function is deactivated automatically and the appliance switches back to "Comfort" mode.

Keypad lock

The control keypad can be locked to prevent accidental changes.

"Eye" presence detector

Eye" mode is activated after no movement has been detected in the room for 60 minutes and automatically sets the temperature to the value chosen for "night/eco" mode.

Standby

In "Standby" mode, the icon, time and day of the week are displayed. All modes, including "pilot wire", are suspended, but power to the appliance remains on waiting to receive the next command.

Pilot wire

The temperature is programmed via the "pilot wire" controls.

Comfort

"Comfort" temperature corresponds to the temperature chosen by the user

Open Window

The "Open Window" function enables the appliance to automatically detect when a window is opened near the towel warmer (for example, when cleaning the house) and to switch to "anti-freeze" mode to prevent unnecessary heating and avoid wasting energy. Similarly, it can detect when the window is closed and restore the operating conditions set previously.

Child Safety

When the "Child Safety" function is activated, the surface of the appliance is cooler than in normal operation in the currently active mode ("Comfort", "Night/Eco"...) to avoid the risk of burns caused by brief accidental contact.

Cycle

The appliance heats for 60 minutes at maximum power, regardless of the temperature set previously.

Night/Eco

"Night/Eco" mode maintains a comfortable temperature with lower energy consumption.

Anti-Freeze

In anti-freeze mode, the minimum temperature is set to 7°C. The appliance comes on automatically at ambient temperatures below 7°C.

Energy Saving

This reduces consumption if there is no-one in the room. The temperature is set at 17°C.

Holiday

If you are away from home for a given number of days, you can set the appliance to remain in "anti-freeze" mode during the entire period of absence and automatically reactivate in the previously selected mode when the set number of days has elapsed.

Behavioural indicator

This function allows you to check whether the set temperature is in line with the recommended temperature to avoid waste and reduce energy consumption.

Instantaneous power indicator

The instantaneous power icon provides an immediate indication of radiator power use (each section represents 20% of the power).

Fan heater

The fan heats for 15-30-45-60 minutes, regardless of temperature previously set.

Chrono

In this mode, you can select one of the three preset chrono-thermostat programmes or the custom programme. The latter lets you set a daily and weekly programme with two temperature levels ("Comfort" and "Night/Eco").

Note

Chemical treatment of the water in the heating system

THE DESIGNER

The designer (if there is a project) or the installer must obligatorily incorporate a water treatment system in the installation to protect new and upgraded heating systems in compliance with the following two legislative requirements:
NORMATIVE REFERENCE: Italian Presidential Decree no. 412 of 26 August 1993 (updating Presidential Decree no. 551 of 21 December 1999) - Art. 5(6): Within the limits and with the specifications indicated in the standard itself, application of the UNI 8065 technical standard relating to water treatment systems is mandatory for newly installed heating systems with a total power greater than or equal to 350 kW.
NORMATIVE REFERENCE: "MINIMUM REQUIREMENTS DECREE" - Italian Ministry of Economic Development Decree of 26-06-2015 - Ordinary Supplement no. 39 of OJ No. 162 of 15-07-2015. "Application of methodologies for calculating energy performance and definition of the prescriptions and minimum requirements for buildings" Extract of text: Ann.1- Chapter 2.3- point 5 "Water treatment for heating and hot water systems": Regarding the quality of the water used in heating systems for winter air conditioning, with or without the production of domestic hot water and without prejudice to application of the UNI BD65 technical standard, chemical conditioning treatment is always mandatory. For systems with a firebox heat output of more than 100 kW and supply water with a total hardness of more than 15 French degrees, a water softening system is mandatory. With regard to the above treatments, reference is made to the technical standard UNI 8065.

THE INSTALLER

The installer must obligatorily provide the installation with an appropriate water treatment system to protect new and upgraded heating installations and must complete compilation of pages 2 and 14 of the Log Book.
NORMATIVE REFERENCE: Ministerial Decree of 10-2-2014 - Models of air-conditioning system log books and energy efficiency reports pursuant to Presidential Decree no. 74/2013. (Published in Official Journal no. 55 of March 7 2014) As of 15 October 2014, heating systems must be provided with a new "air-conditioning system log book", complying with the model in Annex I of the Ministerial Decree of 10/02/2014. Pages 2 and 14.4 are dedicated to the mandatory nature of water treatment systems to protect heating installations for winter air conditioning.

THE MAINTENANCE TECHNICIAN

When verifying the energy efficiency of the installation, the maintenance technician must also verify the presence and functionality of the water treatment systems (appliances and chemical conditioners) and complete compilation of the energy efficiency annex under point C.
NORMATIVE REFERENCE: Presidential Decree 74/13 "regarding operation, management, control, maintenance and inspection of heating systems for winter and summer air conditioning and for the preparation of domestic hot water".
Article 8(c) of the decree specifies that, during the periodic inspections, the boiler maintenance technician must also verify the presence and functionality of the water treatment systems. In addition to the usual energy performance tests by flue gas combustion analysis, the "boiler check" must include mandatory verification of the equipment and products used to protect the heating circuit and domestic hot water system.

STANDARD UNI 8065:2019 EXTRACT

4. Typical problems associated with a heating system and possible remedies Definition of the limit characteristics for the water used in heating systems aims to eliminate or substantially reduce the problems associated with, or attributable to, the water in these installations. Such problems may seriously affect the efficiency of the installations and lead to substantial energy loss and can be summed up as:
- lime scale (ref.: "precipitation and deposition of the salts responsible for water hardness on the walls");
- corrosion (ref.: "electrochemical process causing loss of the surface of a metal, possibly leading to its perforation";
- deposits (ref.: "the result of the precipitation of insoluble organic and inorganic substances);
- biological growths (ref.: "forms of organic life, usually classified in algae, fungi, moulds and bacteria").

Lime scale This reduces the efficiency of the installation and heat exchange, clogs pipes and often triggers corrosion. Lime scale is avoided by chemical stabilisation and/or softening with ion exchange resins.
Corrosion in general is an electrochemical process causing loss of the surface of a metal, possibly leading to its perforation. Corrosion is controlled by specific or multipurpose chemical treatment.
Deposits Unlike lime scale, these are not coherent, but they can however cause the same problems as described above. Deposits are avoided by filtering the inflow water, an appropriate flushing routine and chemical treatment of the water in the circuit.
Biological growths … autotrophic bacteria (for example, iron-oxidising and sulphate-reducing bacteria) are of especial importance and particularly feared as they may be the direct cause of localised corrosion. Biological growths are mainly treated through the use of biocides.
Characteristics of the water for heating systems
Prescribed treatments: Chemical treatment is necessary for all installations.
Characteristics of II and top-up water: The water used to fill and top-up heating systems must be clear with a total hardness of less than 15°F. Please note. For heating systems with a power of less than 350 kW (300,000 kcal/h), if the hardness of the fill or top-up water is less than 35°F, the softener may be replaced by suitable chemical treatment.
Characteristics of the water in the circuit: The water in the circuit must be as clear as possible, with a pH of more than 7 (for radiators with aluminium and light alloy elements, the pH must be less than 8). Water softeners must be used in the concentrations prescribed by the suppliers. The concentration of iron must be less than 0.5 ppm, while for copper, the concentration drops to <0.1 ppm.

NEGATIVE EFFECTS OF THE FAILURE TO CLEAN THE HEATING SYSTEM

In the absence of appropriate prevention and protection against the above, the following problems may occur in the heating system:
- Premature wear and breakage of components
- Corrosion caused by reactions between the metals or manufacturing/installation residues
- Noise in the radiators caused by the formation of hydrogen
- Noise in the boiler caused by clogging of the heat exchanger
- Poor circulation caused by the presence of lime scale, sludge and metal residues

This reduces the flow rate in the installation and increases the stress on the boiler (in other words, higher consumption).

Chemical treatment of the water in the heating system

ADVANTAGES DERIVING FROM CHEMICAL TREATMENT OF THE INSTALLATION

Chemical treatment of the water in the heating system has various advantages:
- prevention of corrosion
- quieter operation
- clean boilers and heat exchanger
- uniform heat across the entire surface of the heating appliance

All these advantages significantly improve the efficiency and performance of the system.

RECOMMENDED CHEMICAL TREATMENTS

Products for heating system protection and prevention To protect the heating system, we recommend use of:
- an inhibitor to protect against lime scale and corrosion (an anti-freeze is also recommended for areas at high altitudes particularly at risk from very cold winter temperatures)
- noise reducer (descaler to remove lime scale from the pipes)
- for new installations, a specific cleaner is recommended to remove fabrication and installation debris
- for radiant panel installations, a sanitising agent and biocide is recommended to avoid the growth of bacteria and fungi which may clog pipes, manifolds, valves and heat exchangers

Products for heating system cleaning and maintenance Heating system maintenance requires the following:
- Sludge: a sludge remover should be used
- Lime scale: a descaler should be used to remove deposits of lime scale (possibly combined with a sludge remover to remove sludge deposits)
- Small leaks in the installation: if some joints drip, a liquid sealant can be used
- Sludge/deposits/corrosion residues: in the case of installations seriously impaired by the presence of various types of residue and debris, the use of a pump and strong cleaning agent are recommended

Neutral cleaning agents which do not corrode carbon steel should be used.

Problem	Cause	Solution
The pump shuts down after the boiler has been replaced	The pump is clogged by residues in the heating system	A cleanser (sludge remover) should be used, possibly together with a specific pump. Subsequently use of an inhibitor is recommended to prevent lime scale. Draining of the water at the end of treatment.
Noise in the boiler	There is lime scale in the heat exchanger	A noise reducer should be used. Subsequently use of an inhibitor is recommended to prevent lime scale
The primary heat exchanger is clogged	The debris formed by corrosion in the installation has accumulated where the passage of water is most difficult	A noise reducer should be used. Subsequently use of an inhibitor is recommended to prevent lime scale
The boiler shuts down	The anti-freeze used has reduced the heat exchange capacity of the water	Draining and change of the water; use of anti-freeze in combination with an inhibitor
The pressure in the installation rises and the air vent is activated	Hydrogen has been formed	Use of a corrosion inhibitor
The radiators are cold at the bottom	Sludge and debris have formed in the bottom of the radiators	A cleanser (sludge remover) should be used, possibly together with a specific pump. Subsequently use of an inhibitor is recommended to prevent lime scale. Draining of the water at the end of treatment.
Panel radiators do not become sufficiently hot	Organic sludge has formed in the tubes and pipes	Use of a sanitising agent, possibly together with a specific pump. Draining of the water at the end of treatment and addition of a new sanitising agent to the water in the new installation.
The pressure in the heating system drops	A small leak has formed at a joint or in a pipe	Use of a liquid sealant. Followed by use of a corrosion inhibitor.

RANGE - Available Technologies and finishes

Range	RAL 9016 Gloss	RAL 9003 Matt	RAL 9004 Rought	Chrome	Finiture
MULTICOLONNA	√				√
PLATTELLA	√				
LINEAR	√				√
FANTASIA LINEA	√		√	√	
FANTASIA PARENTESI	√				
UNIQUE	√			√	
CORTINA	√				
QUARZO	√				√
COBALTO	√				√
AGATA	√				√
IRIDIO	√				
COSY	√				
LOOP		√			√
SHADE	√				
SLASH		√			√
WINNER	√				
STRING		√			√
STREAM		√			√
GATE	√				
MIRÒ	√				√
FANTASIA	√		√	√	
FANTASIA DRY	√				
UNIQUE	√				
CORTINA	√				
COBALTO	√				√
AGATA	√				√
IRIDIO	√				
WINNER	√				
RAYO	√		√		√
CLOUD		√	√		
SMOOTH	√		√		
ALU SIMPLE *PLUS*	√				
SIGHT	√				
ALYNE	√				
ELEGANCE E-FLOW	√		√		
COBALTO E-FLOW	√		√		√
AGATA E-FLOW	√		√		
WINNER E-FLOW	√		√		

Finishing

Finiture	Gloss	Matt	Rought
RAL 9003		√	
RAL 9010	√		
RAL 9001	√		
RAL 1013	√	√	√
RAL 1015	√	√	√
RAL 1002		√	
RAL 8000			√
RAL 1019	√		
RAL 7032	√	√	√
RAL 3012	√	√	√
RAL 2012	√	√	√
RAL 3016	√	√	√
RAL 3014		√	
RAL 6021	√	√	√
RAL 6013	√	√	√
RAL 6020	√	√	√
RAL 5020	√	√	√
RAL 5024		√	
RAL 5003	√	√	√
RAL 9006	√		
RAL 7030	√	√	√
RAL 7037	√	√	√
RAL 7016	√	√	√
RAL 9005	√	√	√

GENERAL CONDITIONS

The warranty conditions in this document are valid for all products in the RADIATORS line.

All exceptions to them are conditional solely and exclusively on written acceptance by RADIATORS.

WARRANTIES

HYDRONIC products: The supplier guarantees, for a period of 15 years, all products in the line, with effect from the invoice date (unless otherwise indicated in the section corresponding to each product).

ELECTRIC products: The supplier guarantees the heating element for a period of 5 years and the electrical parts for 2 years, for all products in the line, with effect from the invoice date (unless otherwise indicated in the section corresponding to each product).

CHROME products: The supplier guarantees the galvanic treatment of the surfaces for a period of 2 years with effect from the invoice date (unless otherwise indicated in the section corresponding to each product).

The supplier further guarantees:

Sound execution in the construction of the material supplied according to the invoice.

Free repair or replacement of those parts that during the warranty period present flaws in materials, defects in manufacture or non-conformance with specifications rendering the component unfit for use.

The warranty will be effective following an examination of the defects and their causes, to be carried out by and on the premises of the supplier indicated by the latter. The new or repaired material will be delivered ex the supplier's warehouse. Any intervention covered under the warranty will not postpone nor renew the expiry of the original warranty period.

The RADIATORS S.P.A. warranty does not replace the warranty established by law, nor does it warrant or represent that the product will be suited to the Customer's needs or will function in combination with any third-party product.

LIFETIME WARRANTY EXTENSION REGULATIONS

The extension of the standard warranty to a "Lifetime Warranty" is reserved solely for De' Longhi brand Radiators and Towel Rail Warmers for centralised heating or independent boilers with fixed installation purchased from authorised centres after 28.5.16 and by 31.12.2024, where expressly indicated in the package.

To benefit from the "Lifetime Warranty" promotion, the product must be installed exclusively with the De' Longhi accessories relating to Annex 1, "Lifetime Warranty Accessories".

The registration of purchase data* (mandatory for obtaining your De' Longhi Lifetime Warranty certificate) must be done exclusively on the RADIATORS site at the following link *https://warranty.radiators-spa.it*

The data must be registered within 60 days of the date of purchase indicated on the purchase receipt or invoice.

WARRANTY EXCLUSION CLAUSES

- If the data requested in the regulations is not duly registered within 60 days of the date of purchase (in the case of extension to the lifetime warranty).
- If the product is installed by unqualified personnel and/or not to industry standards.
- If the product is installed incorrectly or in a manner not compliant with the supplier's instructions.
- If the damages are caused by carelessness, tampering, modifications of the product, accidental causes or negligence of the purchaser, with particular regard to external parts, in the event of failures due to connections of the device to pressures other than those indicated or to sudden changes in pressure in the network to which the device is connected.
- If the radiators are connected to a system with operating pressure greater than that declared by the manufacturer.
- If the water in the system has not been treated with appropriate chemical additives.
- If in the process of tightening of radiator caps and reductions the tightening torque differs from that indicated in the technical catalogues.
- If during the battery nippling process accessories other than original RADIATORS accessories (nipples and white silicone gaskets) are used. Use the tightening torque indicated in the technical catalogues.
- If the non-scratch RADIATORS S.P.A. wrench is not used when assembling joints (for multi-column radiators).
- If radiators are connected to a domestic water system or a system with an open expansion tank.
- If in a new system it is not washed out to eliminate all possible pollutants, processing residues, oils, traces of products used to weld pipes, etc.
- If in old construction systems thorough washing has not been performed to remove encrustations and sludge deposits.
- If the operation and/or maintenance of the system has not been carried out in accordance with the operating and maintenance prescriptions set out in the manual accompanying the product and/or in the technical documentation. In particular:
  1. do not exceed the maximum operating pressure and temperature stated in the technical specifications.
  2. do not use water with a pH of less than 6.5 and more than 8.5. Always perform an adequate chemical treatment of water, especially in the case of hard water. The UNI 8065 standard, made mandatory by Italian Law 46/90, requires appropriate chemical water treatment in all heating systems. Italian Ministerial Decree 37/08 "System safety regulations" contemplates "the obligation to install systems to industry standards" and to apply existing regulations, using materials and components manufactured to industry standards, and thus also to refer to UNI 8065 on "Treatment of water in heating systems for civil use".
- If damages have been caused by the electrical power grid (failures or anomalies).
- Where antifreeze is used, it must never be used pure, but used according to the manufacturer's instructions before being put into the circuit.
- Where a corrosion inhibitor is used, it must be compatible with all materials present in the heating elements.
- If the damages are due to anomalies in the water main (high pressure, water hammer and similar phenomena).
- If the damages are attributable to wandering currents or if the shelves have not been properly insulated.
- If the radiator surfaces are cleaned with chemical cleaning products that may damage the paint. Radiators may only be cleaned using special soft cloths to avoid scratching the paint and dried only with fabrics washed with water.
- If the damages are due to weights and/or objects placed on the radiator or to people who make improper use of them (bench, shelf, step, etc.). Damages due to any improper, non-functional use.
- •If the damages are due to rust owing to installation in aggressive environments such as saunas, swimming pools, urinals, etc.
- If the damages are due to improper size.
- If the damages are due to ice formation (filled radiator exposed to temperatures below 0°C).
- If the damages are due to the use of components or parts that are not original or not authorised by RADIATORS S.P.A.
- If the product suffers accidental damages caused by incidents, fires or accidents in general, or otherwise caused in shipping not organised by RADIATORS S.P.A. or there is found to be air and/or a lack of liquid in the circuit.
- If the product has been tampered with through adaptation or repair work without written authorisation from the supplier.
- If the buyer does not observe the established payment terms.
- If the warranty is not claimed in the legal terms and manner.

- •If hemp or other insulating materials are used.
- If it is installed less than a metre from sources of water (edge of sink, shower stall, bath tub, toilet, bidet, etc.).
- The material has not been stored in good conditions and sheltered from inclement weather before it is installed.
- Where chemical tools and/or products that may damage the finish are used to clean products.
- Where, after initial filling, the heating elements remain without water and have not been periodically emptied.

LIMITATION OF LIABILITY

Within the limits permitted by law, RADIATORS S.P.A. disclaims all liability, according to all interpretations of liability, whether contractual, legal or in tort (including negligence), for any direct, indirect, fortuitous, specific, exemplary or consequential damages, loss of use or profits or interruption of business activity, or any other financial loss arising from or connected to the sale, installation, maintenance, use, performance or non-performance or failure of its products, and therefore limits its liability to repair, replacement or reimbursement of the price of purchase.

RESERVATION OF RIGHTS

RADIATORS S.P.A. reserves the right to make modifications to products, technical and size data at all times and without advance notice.

RADIATORS S.P.A. remains the owner of the product until the Customer completes the agreed payment.

The surfaces, yields, weights and all other data regarding radiators provided in price lists and catalogues are to be considered indicative and subject to tolerance ranges without price adjustments.

RADIATORS S.P.A. reserves the right to replace the models of its radiators without advance notice.

GENERAL TERMS AND CONDITIONS OF SALE

The following general terms and conditions of sale are deemed to be accepted at the moment the Customer receives the order confirmation from RADIATORS.

CONDIZIONI DI PAGAMENTO

Payments must be made in a legal currency to RADIATORS, Udine (Italy).

If payment is not made by the agreed term, late-payment interest shall be charged at the current bank rate.

Goods shall be supplied ex works.

Accessory components are invoiced separately.

Failure to supply accessory components that do not in any case impair use of the products delivered shall not entitle the Customer to suspend or delay payment for the products.

The Customer may not withhold or reduce the amount due on the basis of credit notes not yet issued or in relation to claims not acknowledged by RADIATORS.

It is expressly agreed that the Customer's obligation to pay shall be binding on the Customer, even in the event of a dispute and whatever the nature and significance thereof.

TRANSPORT OF GOODS, PACKAGING AND CONSIGNMENT

Unless expressly agreed otherwise, delivery times are always approximate and not binding.

Goods travel at the risk of the Customer.

Special packaging not otherwise provided for shall be invoiced separately.

Delays in delivery attributable to the carrier are not the liability of Radiators.

Extraordinary events, natural calamities or other causes of force majeure shall release RADIATORS from any mandatory delivery terms.

CLAIMS AND RETURNED GOODS

Claims for visible defects must be received by RADIATORS in writing no later than 8 days after receipt of the good.

For other defects, the above warranty conditions shall remain valid.

Prices may be subject to revision by RADIATORS according to the variations that may occur up to the time the order confirmation is received by the Customer.

No claims shall be accepted for goods altered or damaged by third parties or the Customer.

Returns are considered ex RADIATORS (ex RADIATORS' production plants in Udine (UD) only, not the company's registered office).

RADIATORS disclaims any obligation to replace its radiators for defects attributable to improper maintenance.

The installer must take out insurance against any possible water damage.

TECHNICAL DATA

The surface areas, performance, weights and all other data referring to the radiators, as stated in price lists and catalogues, shall be understood as indicative and comprehend working tolerances that are not subject to price adjustments;

COURT WITH JURISDICTION

For any controversy, the sole court with jurisdiction shall be the Court of Udine (Italy), excluding any derogations. RADIATORS S.P.A. reserves the right to replace its radiator models without prior notice.