bonomi

COLLECTION #211

CONTEMPORANEO**ITALIANO**

bonomi

CONTEMPORANEO**ITALIANO**

COMPANY
PROFILE

CREATION

19TH CENTURY BEGINNINGS
OFFICE OF HISTORICAL BONOMI
VIA DELL'ARCO - LUMEZZANE, BRESCIA

OUR EFFORTS IN CREATION

IT IS NOT DIFFICULT TO FIND FANTASTIC MACHINERY. IT'S THE PEOPLE THAT COUNT, THOSE WHO USE THEM TO CREATE.

Giuseppe Bonomi, Chairman

HISTORY

THE HISTORY OF BONOMI HAS BEEN MADE THROUGH A CENTURY OF "CRAFT MANIA"

AND ENTREPRENEURIAL SPIRIT.

GENERATION AFTER GENERATION, EACH LIVING THE AMBITION TO IMPROVE BY CONTINUOUS, PATIENT AND TRANSVERSAL RESEARCH, RIGOROUS QUALITY CONTROL, KEEPING PACE WITH THE EVOLUTION OF TECHNOLOGY, UNTIRING DAILY EFFORTS NURTURED BY SOBRIETY.

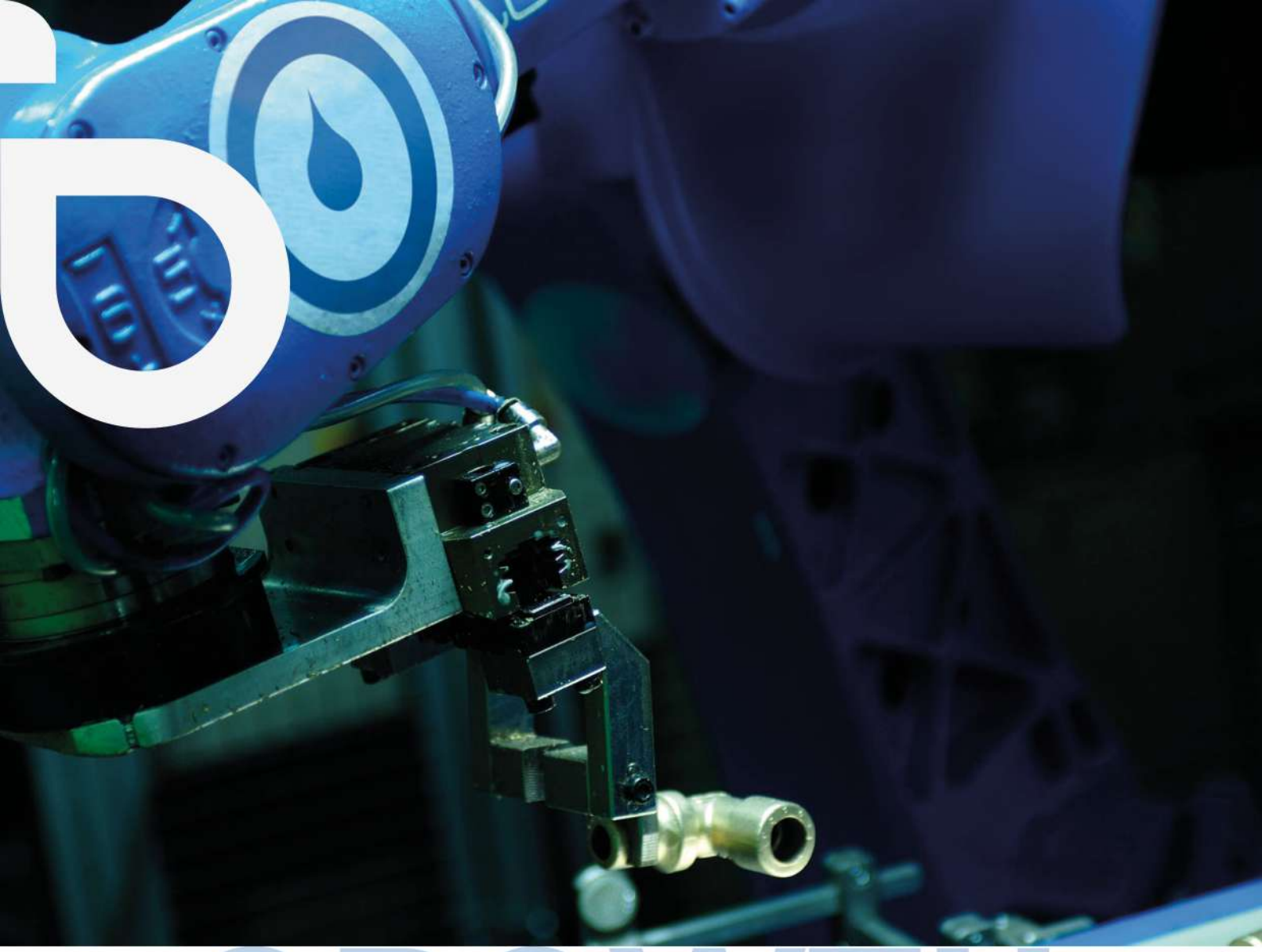

GROWTH

BONOMI GROWS
IN THE 30s

IT CONVERTS ITSELF BY PRODUCING COMPONENTS FOR WATER, HEATING AND SANITARY SYSTEMS. IN THOSE YEARS, A STRATEGIC AND WINNING CHOICE IS MADE: LONG-TERM CONTINUOUS INVESTMENT IN THE MOST UP-TO-DATE MACHINERY.

SELF-SUFFICIENCY IN PRODUCTION AND TECHNOLOGY HAS NOT PREVENTED BONOMI FROM GENERATING IMPORTANT SATELLITE INDUSTRIES, THUS CREATING GREATER EMPLOYMENT. MANY SONS OF THE CRAFTSMEN WHO WORKED FREELANCE FOR BONOMI ARE NOW MANAGERS IN SUCCESSFUL COMPANIES.

DESIGN

NOWADAYS BONOMI REPRESENTS A CONSOLIDATED GROUP
AND CONTEMPORARY DESIGN BRAND
FOR ITALIAN TAPS AND FITTINGS.

3
PRODUCTION SITES

25
THOUSAND SQUARE METRES

100
EMPLOYEES

WHY CHOOSE BONOMI

ITALY

BONOMI IS ITALIAN

BONOMI HAS BEEN AN ITALIAN FAMILY COMPANY FOR GENERATIONS. ALL PIECES CARRYING ITS SIGNATURE HAVE BEEN MANUFACTURED AND ASSEMBLED IN ITALY.

BONOMI IS ITALIAN INSTINCT FOR STYLE: DESIGN DERIVING FROM THE WISH TO "CREATE" EMBODIED IN THE WISH TO "PRODUCE". BONOMI IS ITALIAN, COSMOPOLITAN, STANDING OUT IN ITS OWN FINGERPRINT OF STYLE, OPEN TO CONTAMINATION OF INTERNATIONAL DESIGN.

PROJECTS

Progetto Peloponisos / People

Liostatsi Hotel & Suites (Chora, Grecia) / Arco

Patrick Helou (Mykonos, Grecia) / Trenta9

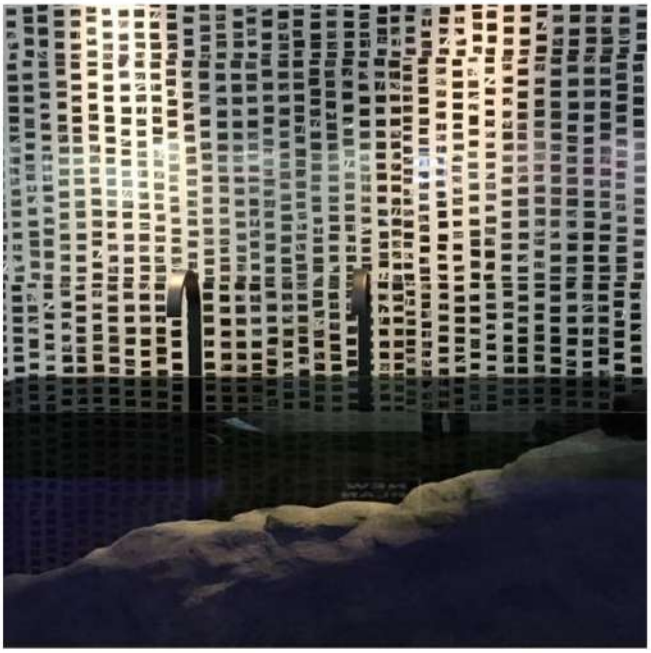

Bagno y Bagno - Ioannis Papacharalambous
100% Hotel Show / Arco

TRENTA9 11
PEOPLE 43
TUBE 57
ZERO 69
BONNY 119
ARCO 131
JUST 167
ELLE 185
SHOWERS 213
GENERIC PARTS 273
ACCESSORIES 279

TRENTA9

TRENTA9

CONTEMPORANEO**ITALIANO**

TRENTA9

303000/F

Single lever basin mixer and waste

Chrome	303000/F
Matt Black	B303000/F
Matt White	W303000/F
Brushed Nickel	S303000/F
Brushed Gold	H303000/F
Brushed Rose Gold	R303000/F

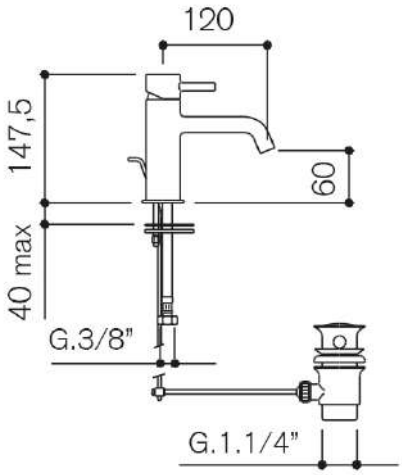

TRENTA9

303001/F

Tall single lever basin mixer with 140 mm extension with waste

Chrome	303001/F
Matt Black	B303001/F
Matt White	W303001/F
Brushed Nickel	S303001/F
Brushed Gold	H303001/F
Brushed Rose Gold	R303001/F

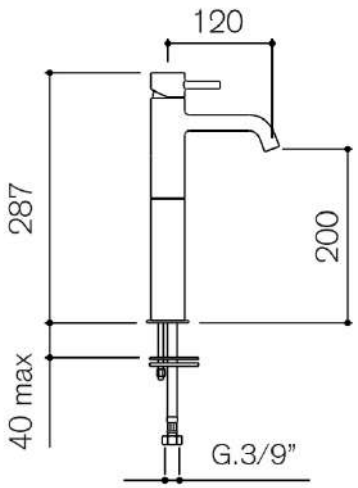

TRENTA9

303002/F

Tall single lever basin mixer with 200 mm extension with waste

Chrome	303002/F
Matt Black	B303002/F
Matt White	W303002/F
Brushed Nickel	S303002/F
Brushed Gold	H303002/F
Brushed Rose Gold	R303002/F

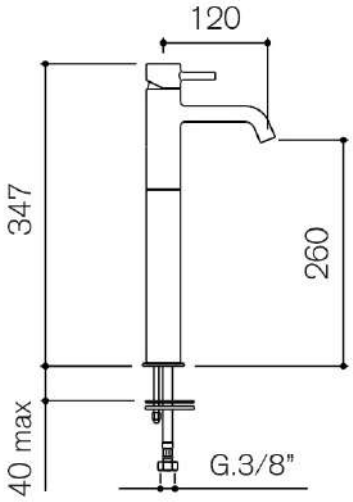

TRENTA9

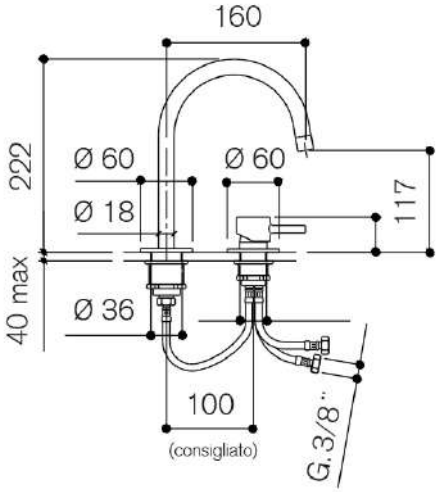

313127/F

2 hole deck mounted basin mixer with 222 mm spout ø 18 mm with waste

Chrome	313127/F
Matt Black	B313127/F
Matt White	W313127/F
Brushed Nickel	S313127/F
Brushed Gold	H313127/F
Brushed Rose Gold	R313127/F

COMPONENTS

Deck mounted washbasin mixer

Chrome	313000/19C
Matt Black	B313000/19C
Matt White	W313000/19C
Brushed Nickel	S313000/19C
Brushed Gold	H313000/19C
Brushed Rose Gold	R313000/19C

222 mm wall mounted washbasin spout ø 18 mm

Chrome	113127/29B
Matt Black	B113127/29B
Matt White	W113127/29B
Brushed Nickel	S113127/29B
Brushed Gold	H113127/29B
Brushed Rose Gold	R113127/29B

TRENTA9

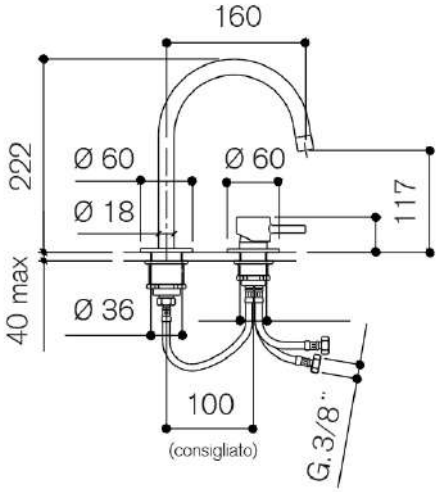

313127S/F

2 hole deck mounted basin mixer with 222 mm swivel spout ø 18 mm with waste

Chrome	313127S/F
Matt Black	B313127S/F
Matt White	W313127S/F
Brushed Nickel	S313127S/F
Brushed Gold	H313127S/F
Brushed Rose Gold	R313127S/F

COMPONENTS

Deck mounted washbasin mixer

Chrome	313000/19C
Matt Black	B313000/19C
Matt White	W313000/19C
Brushed Nickel	S313000/19C
Brushed Gold	H313000/19C
Brushed Rose Gold	R313000/19C

222 mm deck mounted basin swivel spout ø 18 mm

Chrome	113137/29B
Matt Black	B113137/29B
Matt White	W113137/29B
Brushed Nickel	S113137/29B
Brushed Gold	H113137/29B
Brushed Rose Gold	R113137/29B

360 system
ON OFF

Bocca girevole/Swivel spout

TRENTA9

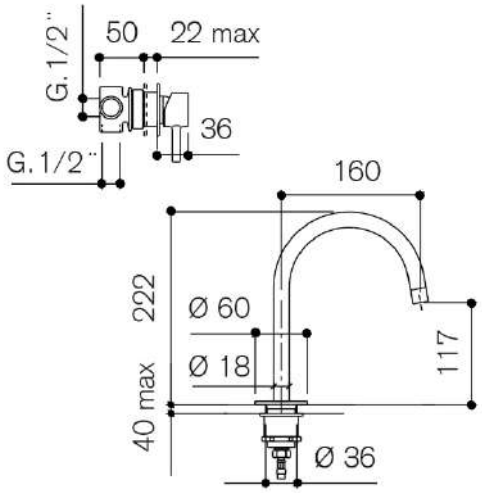

313114/F

Wall mounted basin mixer with deck mounted 222 mm spout ø 18 mm with waste

Chrome	313114/F
Matt Black	B313114/F
Matt White	W313114/F
Brushed Nickel	S313114/F
Brushed Gold	H313114/F
Brushed Rose Gold	R313114/F

COMPONENTS

Wall mounted mixer

Chrome	312032/49B
Matt Black	B312032/49B
Matt White	W312032/49B
Brushed Nickel	S312032/49B
Brushed Gold	H312032/49B
Brushed Rose Gold	R312032/49B

222 mm wall mounted washbasin spout ø 18 mm

Chrome	113127/29B
Matt Black	B113127/29B
Matt White	W113127/29B
Brushed Nickel	S113127/29B
Brushed Gold	H113127/29B
Brushed Rose Gold	R113127/29B

TRENTA9

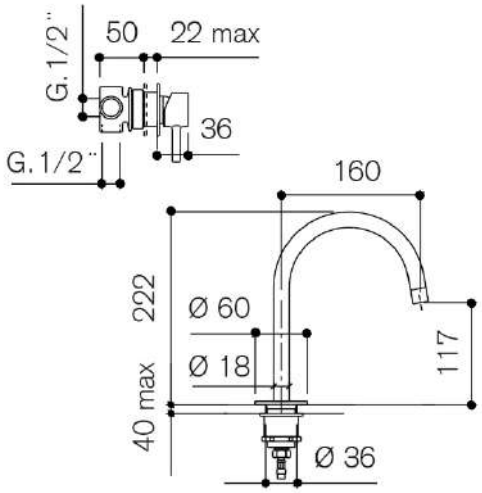

313114S/F

Wall mounted basin mixer with deck mounted 222 mm swivel spout ø 18 mm with waste

Chrome	313114S/F
Matt Black	B313114S/F
Matt White	W313114S/F
Brushed Nickel	S313114S/F
Brushed Gold	H313114S/F
Brushed Rose Gold	R313114S/F

COMPONENTS

Wall mounted mixer

Chrome	312032/49B
Matt Black	B312032/49B
Matt White	W312032/49B
Brushed Nickel	S312032/49B
Brushed Gold	H312032/49B
Brushed Rose Gold	R312032/49B

222 mm deck mounted basin swivel spout ø 18 mm

Chrome	113137/29B
Matt Black	B113137/29B
Matt White	W113137/29B
Brushed Nickel	S113137/29B
Brushed Gold	H113137/29B
Brushed Rose Gold	R113137/29B

360 system
ON OFF

Bocca girevole/Swivel spout

TRENTA9

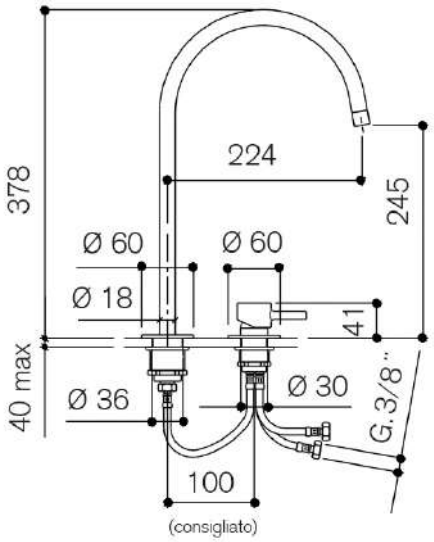

313128/F

2 hole deck mounted basin mixer with 383 mm spout ø 18 mm with waste

Chrome	313128/F
Matt Black	B313128/F
Matt White	W313128/F
Brushed Nickel	S313128/F
Brushed Gold	H313128/F
Brushed Rose Gold	R313128/F

COMPONENTS

Deck mounted washbasin mixer

Chrome	313000/19C
Matt Black	B313000/19C
Matt White	W313000/19C
Brushed Nickel	S313000/19C
Brushed Gold	H313000/19C
Brushed Rose Gold	R313000/19C

383 mm wall mounted washbasin spout ø 18 mm

Chrome	113128/29B
Matt Black	B113128/29B
Matt White	W113128/29B
Brushed Nickel	S113128/29B
Brushed Gold	H113128/29B
Brushed Rose Gold	R113128/29B

TRENTA9

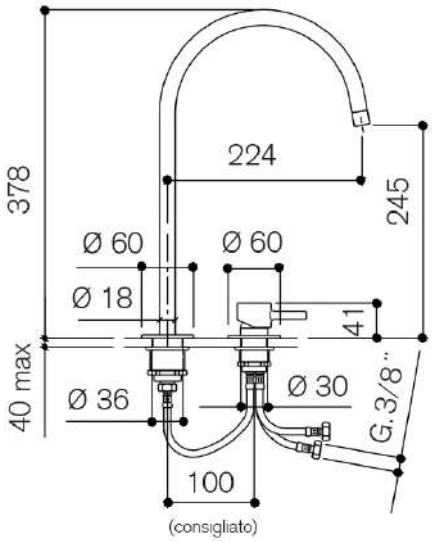

313128S/F

2 hole deck mounted basin mixer with 383 mm swivel spout ø 18 mm with waste

Chrome	313128S/F
Matt Black	B313128S/F
Matt White	W313128S/F
Brushed Nickel	S313128S/F
Brushed Gold	H313128S/F
Brushed Rose Gold	R313128S/F

COMPONENTS

Deck mounted washbasin mixer

Chrome	313000/19C
Matt Black	B313000/19C
Matt White	W313000/19C
Brushed Nickel	S313000/19C
Brushed Gold	H313000/19C
Brushed Rose Gold	R313000/19C

383 mm deck mounted basin swivel spout ø 18 mm

Chrome	113138/29B
Matt Black	B113138/29B
Matt White	W113138/29B
Brushed Nickel	S113138/29B
Brushed Gold	H113138/29B
Brushed Rose Gold	R113138/29B

360 system
ON OFF

Bocca girevole/Swivel spout

TRENTA9

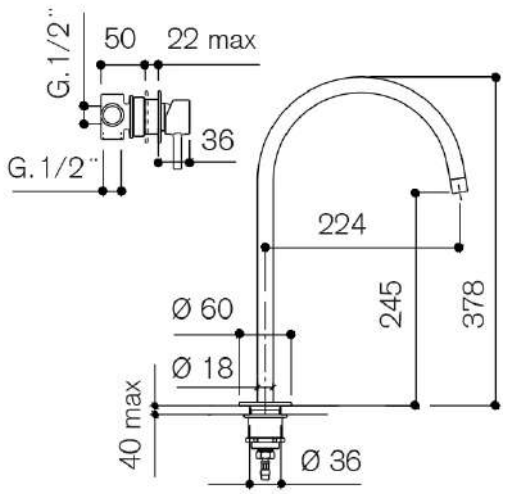

313115/F

Wall mounted basin mixer with deck mounted 383 mm spout ø 18 mm with waste

Chrome	313115/F
Matt Black	B313115/F
Matt White	W313115/F
Brushed Nickel	S313115/F
Brushed Gold	H313115/F
Brushed Rose Gold	R313115/F

COMPONENTS

Wall mounted mixer

Chrome	312032/49B
Matt Black	B312032/49B
Matt White	W312032/49B
Brushed Nickel	S312032/49B
Brushed Gold	H312032/49B
Brushed Rose Gold	R312032/49B

383 mm wall mounted washbasin spout ø 18 mm

Chrome	113128/29B
Matt Black	B113128/29B
Matt White	W113128/29B
Brushed Nickel	S113128/29B
Brushed Gold	H113128/29B
Brushed Rose Gold	R113128/29B

TRENTA9

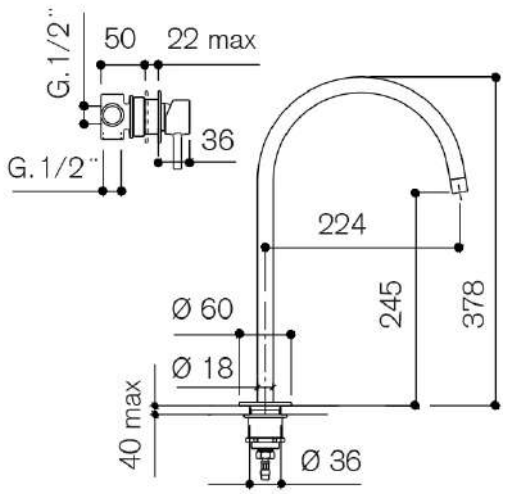

313115S/F

Wall mounted basin mixer with deck mounted 383 mm swivel spout ø 18 mm with waste

Chrome	313115S/F
Matt Black	B313115S/F
Matt White	W313115S/F
Brushed Nickel	S313115S/F
Brushed Gold	H313115S/F
Brushed Rose Gold	R313115S/F

COMPONENTS

Wall mounted mixer

Chrome	312032/49B
Matt Black	B312032/49B
Matt White	W312032/49B
Brushed Nickel	S312032/49B
Brushed Gold	H312032/49B
Brushed Rose Gold	R312032/49B

383 mm deck mounted basin swivel spout ø 18 mm

Chrome	113138/29B
Matt Black	B113138/29B
Matt White	W113138/29B
Brushed Nickel	S113138/29B
Brushed Gold	H113138/29B
Brushed Rose Gold	R113138/29B

360 system
ON OFF
Bocca girevole/Swivel spout

TRENTA9

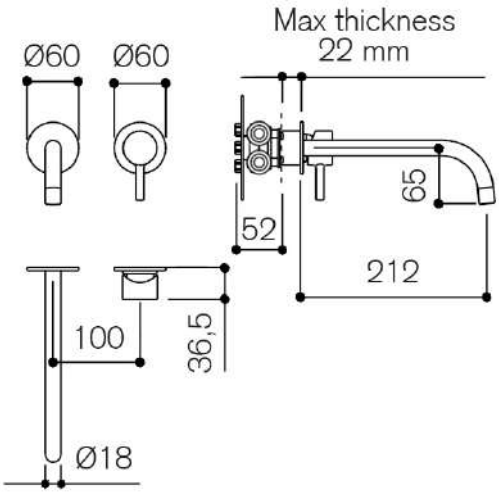

313161

Wall mounted basin mixer with 212 mm spout ø 18 mm

Chrome	313161
Matt Black	B313161
Matt White	W313161
Brushed Nickel	S313161
Brushed Gold	H313161
Brushed Rose Gold	R313161

COMPONENTS

Wall mounted basin mixer - concealed part

Chrome	313161/19C
Matt Black	B313161/19C
Matt White	W313161/19C
Brushed Nickel	S313161/19C
Brushed Gold	H313161/19C
Brushed Rose Gold	R313161/19C

Finish set including 212 mm spout ø 18 mm and flanges

Chrome	113161E
Matt Black	B113161E
Matt White	W113161E
Brushed Nickel	S113161E
Brushed Gold	H113161E
Brushed Rose Gold	R113161E

TRENTA9

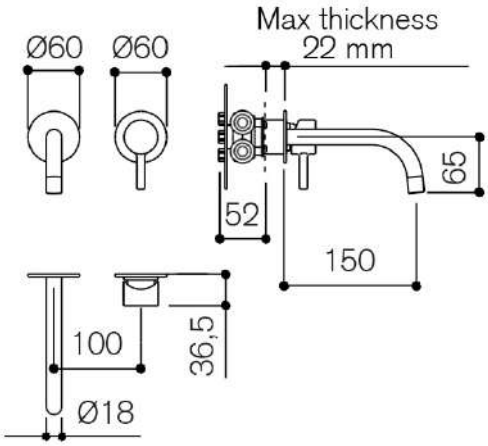

313171

Wall mounted basin mixer with 150 mm spout ø 18 mm

Chrome	313171
Matt Black	B313171
Matt White	W313171
Brushed Nickel	S313171
Brushed Gold	H313171
Brushed Rose Gold	R313171

COMPONENTS

Wall mounted basin mixer - concealed part

Chrome	313161/19C
Matt Black	B313161/19C
Matt White	W313161/19C
Brushed Nickel	S313161/19C
Brushed Gold	H313161/19C
Brushed Rose Gold	R313161/19C

Finish set including 150 mm spout ø 18 mm and flanges

Chrome	113171E
Matt Black	B113171E
Matt White	W113171E
Brushed Nickel	S113171E
Brushed Gold	H113171E
Brushed Rose Gold	R113171E

TRENTA9

313162

Wall mounted basin mixer with plate and 212 mm spout ø 18 mm

Chrome	313162

COMPONENTS

Wall mounted basin mixer - concealed part

Chrome	313161/19C

Finish set including 212 mm spout ø 18 mm and plate

Chrome	113162E

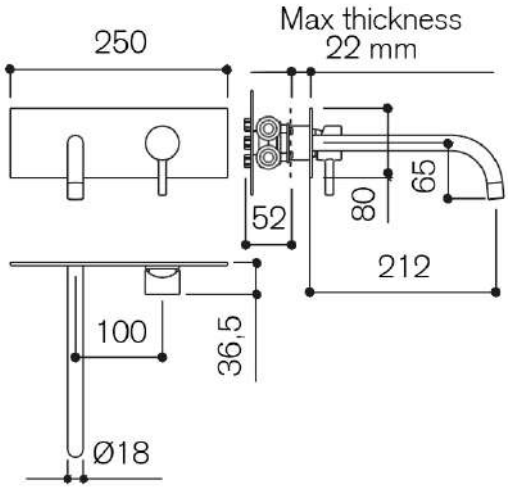

TRENTA9

313172

Wall mounted basin mixer with plate and 150 mm spout ø 18 mm

Chrome 313172

COMPONENTS

Wall mounted basin mixer - concealed part

Chrome 313161/19C

Finish set including 150 mm spout ø 18 mm and plate

Chrome 113172E

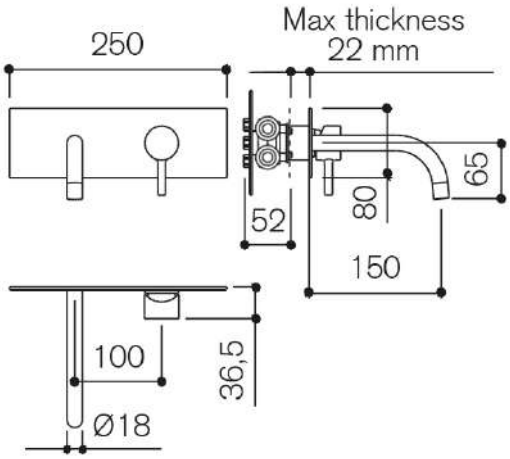

TRENTA9

304020/F

Single lever bidet mixer with waste

Chrome	304020/F
Matt Black	B304020/F
Matt White	W304020/F
Brushed Nickel	S304020/F
Brushed Gold	H304020/F
Brushed Rose Gold	R304020/F

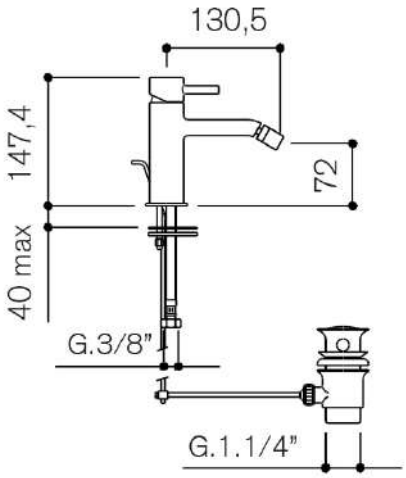

TRENTA9

314127/F

2 hole deck mounted bidet mixer with 107 mm spout ø 18 mm with waste

Chrome	314127/F
Matt Black	B314127/F
Matt White	W314127/F
Brushed Nickel	S314127/F
Brushed Gold	H314127/F
Brushed Rose Gold	R314127/F

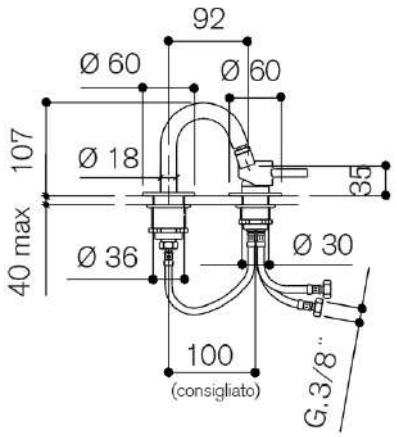

COMPONENTS

Deck mounted washbasin mixer

Chrome	313000/19C
Matt Black	B313000/19C
Matt White	W313000/19C
Brushed Nickel	S313000/19C
Brushed Gold	H313000/19C
Brushed Rose Gold	R313000/19C

Deck mounted 107 mm bidet spout ø 18 mm

Chrome	114127/29B
Matt Black	B114127/29B
Matt White	W114127/29B
Brushed Nickel	S114127/29B
Brushed Gold	H114127/29B
Brushed Rose Gold	R114127/29B

TRENTA9

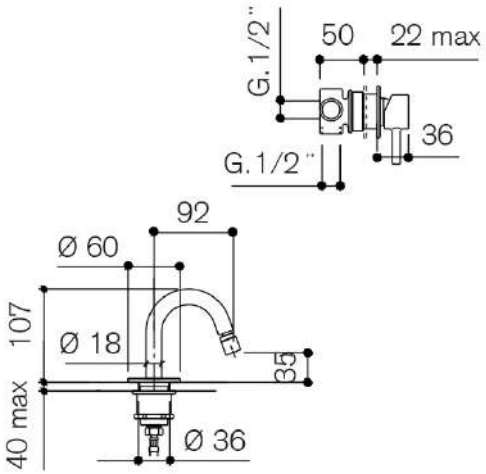

314114/F

Wall mounted bidet mixer with deck mounted 107 mm spout ø 18 mm with waste

Chrome	314114/F
Matt Black	B314114/F
Matt White	W314114/F
Brushed Nickel	S314114/F
Brushed Gold	H314114/F
Brushed Rose Gold	R314114/F

COMPONENTS

Wall mounted mixer

Chrome	312032/49B
Matt Black	B312032/49B
Matt White	W312032/49B
Brushed Nickel	S312032/49B
Brushed Gold	H312032/49B
Brushed Rose Gold	R312032/49B

Deck mounted 107 mm bidet spout ø 18 mm

Chrome	114127/29B
Matt Black	B114127/29B
Matt White	W114127/29B
Brushed Nickel	S114127/29B
Brushed Gold	H114127/29B
Brushed Rose Gold	R114127/29B

TRENTA9

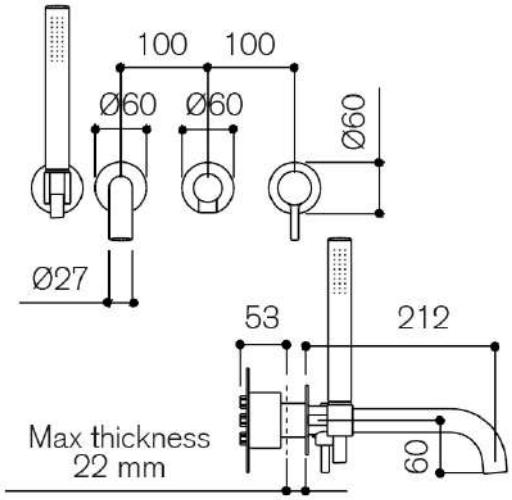

312423

Wall mounted bath/shower mixer with diverter, hand shower and 212 mm spout

Chrome	312423
Matt Black	B312423
Matt White	W312423
Brushed Nickel	S312423
Brushed Gold	H312423
Brushed Rose Gold	R312423

COMPONENTS

Wall mounted bath shower mixer with diverter - concealed part

Chrome	312420/19C
Matt Black	B312420/19C
Matt White	W312420/19C
Brushed Nickel	S312420/19C
Brushed Gold	H312420/19C
Brushed Rose Gold	R312420/19C

Finish set including wall mounted 212 mm spout, flanges and hand shower kit

Chrome	112423E
Matt Black	B112423E
Matt White	W112423E
Brushed Nickel	S112423E
Brushed Gold	H112423E
Brushed Rose Gold	R112423E

TRENTA9

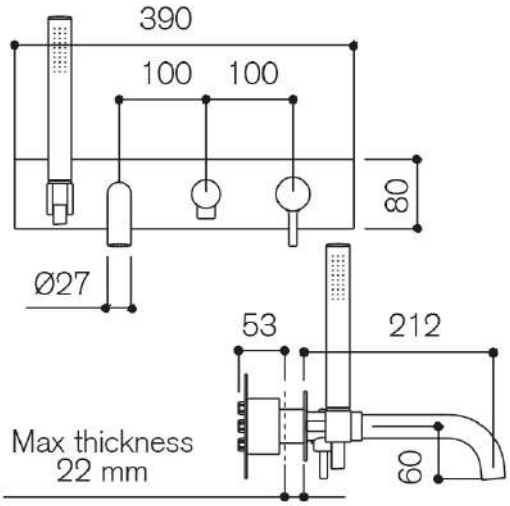

312420

Wall mounted bath/shower mixer with plate, diverter, hand shower and 212 mm spout

Chrome	312420

COMPONENTS

Wall mounted bath shower mixer with diverter - concealed part

Chrome	312420/19C

Finish set including wall mounted 212 mm spout, plate and hand shower kit

Chrome	112420E

TRENTA9

312400

4 hole deck mounted bath/shower mixer with diverter, hand shower and 230 mm spout

Chrome	312400
Matt Black	B312400
Matt White	W312400
Brushed Nickel	S312400
Brushed Gold	H312400
Brushed Rose Gold	R312400

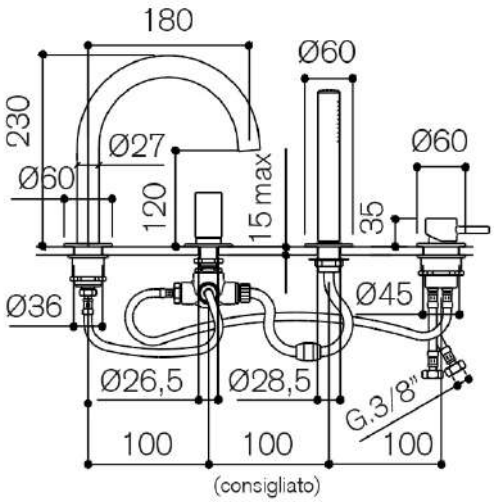

TRENTA9

312032/49B

Wall mounted mixer

In case this item appears as a component of a more complex product, the colors available remain the ones indicated in the series of reference.

Chrome	312032/49B
Matt Black	B312032/49B
Matt White	W312032/49B
Brushed Nickel	S312032/49B
Brushed Gold	H312032/49B
Brushed Rose Gold	R312032/49B

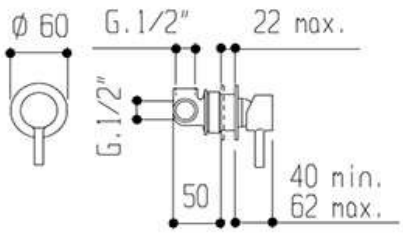

TRENTA9

302327

Wall mounted manual mixer with diverter and round plate

Chrome 302327

COMPONENTS

Wall mounted shower mixer with diverter - concealed part

Chrome 302326/19C

Finish set including round plate

Chrome 302327E

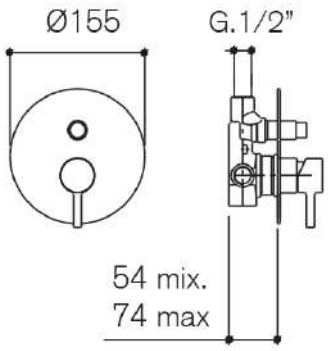

TRENTA9

302326

Wall mounted manual mixer with diverter and rectangular plate

Chrome 302326

COMPONENTS

Wall mounted shower mixer with diverter - concealed part

Chrome 302326/19C

Finish set including rectangular plate

Chrome 302326E

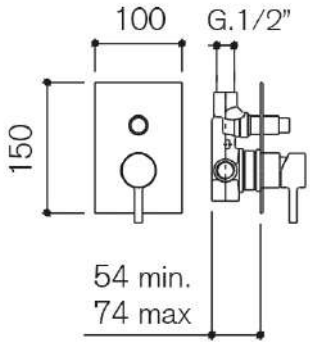

TRENTA9

312326

Wall mounted manual mixer with plate, diverter and hand shower

Chrome 312326

COMPONENTS

Wall mounted shower mixer with diverter - concealed part

Chrome 312322/19C

Finish set including plate and hand shower kit

Chrome 112322E

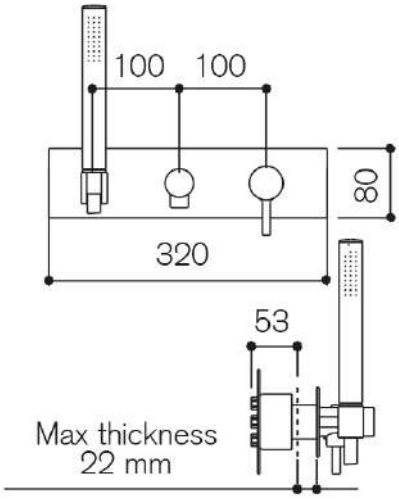

TRENTA9

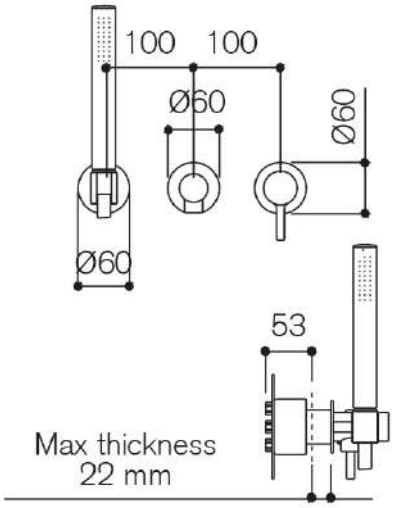

312327

Wall mounted manual mixer with diverter and hand shower

Chrome	312327
Matt Black	B312327
Matt White	W312327
Brushed Nickel	S312327
Brushed Gold	H312327
Brushed Rose Gold	R312327

COMPONENTS

Wall mounted shower mixer with diverter - concealed part

Chrome	312322/19C
Matt Black	B312322/19C
Matt White	W312322/19C
Brushed Nickel	S312322/19C
Brushed Gold	H312322/19C
Brushed Rose Gold	R312322/19C

Finish set including flanges and hand shower kit

Chrome	112324E
Matt Black	B112324E
Matt White	W112324E
Brushed Nickel	S112324E
Brushed Gold	H112324E
Brushed Rose Gold	R112324E

TRENTA9

313136/F

Deck mounted basin mixer with 1.202 mm floor mounted spout

Chrome	313136/F
Matt Black	B313136/F
Matt White	W313136/F
Brushed Nickel	S313136/F

COMPONENTS

Deck mounted washbasin mixer

Chrome	313000/19C
Matt Black	B313000/19C
Matt White	W313000/19C
Brushed Nickel	S313000/19C

Floor mounted 1.202 mm basin spout

Chrome	113106/29C
Matt Black	B113106/29C
Matt White	W113106/29C
Brushed Nickel	S113106/29C

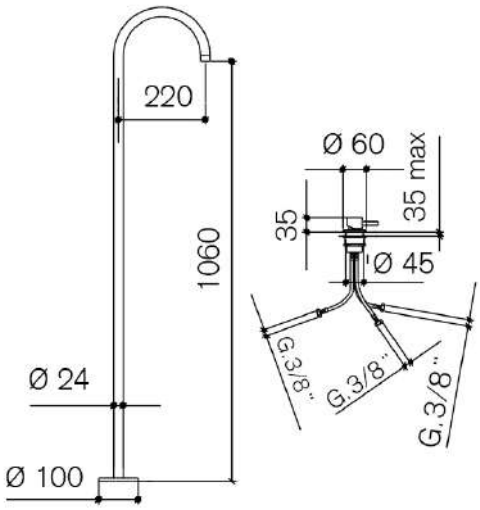

TRENTA9

313106/F

Wall mounted basin mixer with 1.202 mm floor mounted spout

Chrome	313106/F
Matt Black	B313106/F
Matt White	W313106/F
Brushed Nickel	S313106/F

COMPONENTS

Wall mounted mixer

Chrome	312032/49B
Matt Black	B312032/49B
Matt White	W312032/49B
Brushed Nickel	S312032/49B

Floor mounted 1.202 mm basin spout

Chrome	113106/29C
Matt Black	B113106/29C
Matt White	W113106/29C
Brushed Nickel	S113106/29C

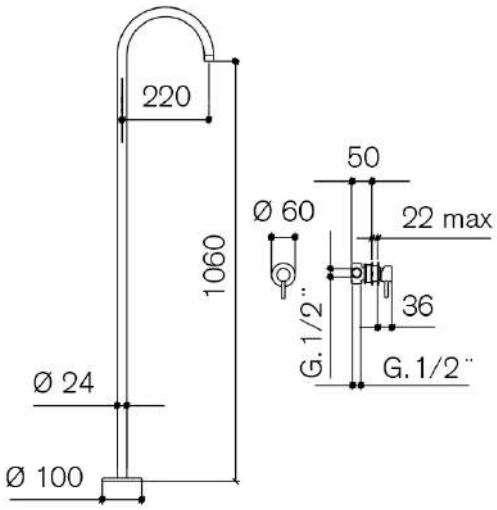

TRENTA9

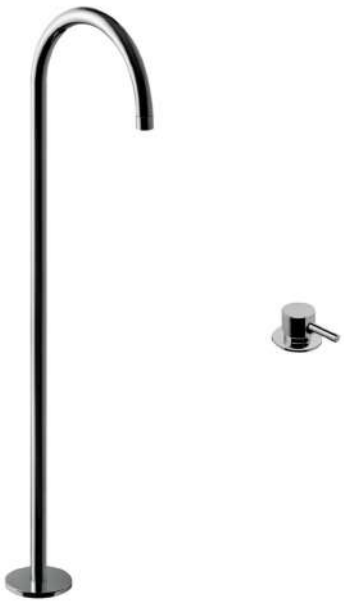

312409

Deck mounted bath mixer with 872 mm floor mounted spout

Chrome	312409
Matt Black	B312409
Matt White	W312409
Brushed Nickel	S312409
Brushed Gold	H312409
Brushed Rose Gold	R312409

COMPONENTS

Deck mounted bath mixer

Chrome	312300/19C
Matt Black	B312300/19C
Matt White	W312300/19C
Brushed Nickel	S312300/19C
Brushed Gold	H312300/19C
Brushed Rose Gold	R312300/19C

Floor mounted 872 mm bath spout

Chrome	112421/29C
Matt Black	B112421/29C
Matt White	W112421/29C
Brushed Nickel	S112421/29C
Brushed Gold	H112421/29C
Brushed Rose Gold	R112421/29C

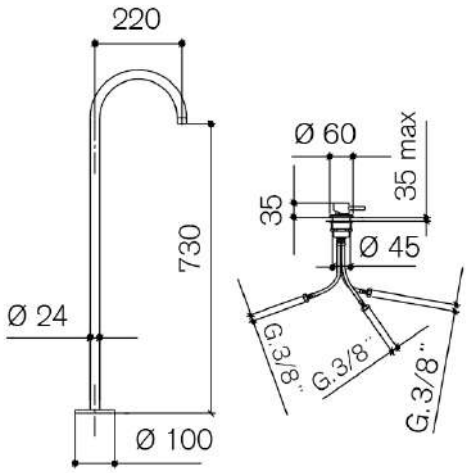

TRENTA9

312408

Wall mounted bath mixer with 872 mm floor mounted spout

Chrome	312408
Matt Black	B312408
Matt White	W312408
Brushed Nickel	S312408
Brushed Gold	H312408
Brushed Rose Gold	R312408

COMPONENTS

Wall mounted mixer

Chrome	312032/49B
Matt Black	B312032/49B
Matt White	W312032/49B
Brushed Nickel	S312032/49B
Brushed Gold	H312032/49B
Brushed Rose Gold	R312032/49B

Floor mounted 872 mm bath spout

Chrome	112421/29C
Matt Black	B112421/29C
Matt White	W112421/29C
Brushed Nickel	S112421/29C
Brushed Gold	H112421/29C
Brushed Rose Gold	R112421/29C

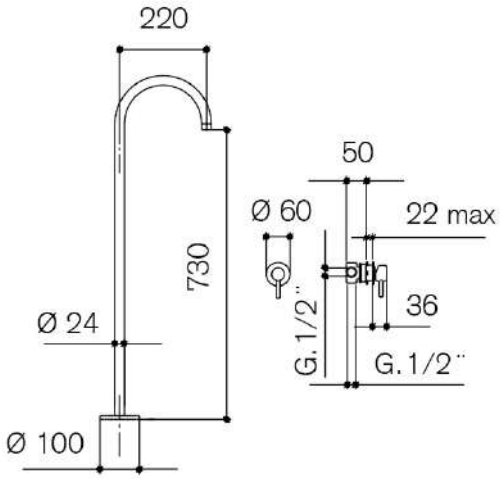

TRENTA9

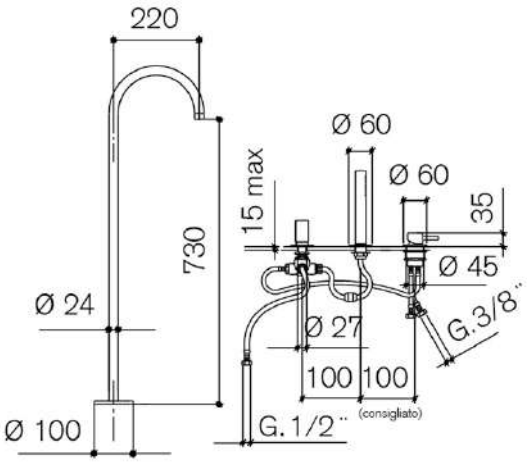

312421

3 hole deck mounted bath/shower mixer with diverter, hand shower and 872 mm floor mounted spout

Chrome	312421
Matt Black	B312421
Matt White	W312421
Brushed Nickel	S312421
Brushed Gold	H312421
Brushed Rose Gold	R312421

COMPONENTS

Deck mounted bath mixer

Chrome	312300/19C
Matt Black	B312300/19C
Matt White	W312300/19C
Brushed Nickel	S312300/19C
Brushed Gold	H312300/19C
Brushed Rose Gold	R312300/19C

Deck mounted bath 2 way diverter

Chrome	112300/229C
Matt Black	B112300/229C
Matt White	W112300/229C
Brushed Nickel	S112300/229C
Brushed Gold	H112300/229C
Brushed Rose Gold	R112300/229C

Deck mounted hand shower kit

Chrome	112300/189B
Matt Black	B112300/189B
Matt White	W112300/189B
Brushed Nickel	S112300/189B
Brushed Gold	H112300/189B
Brushed Rose Gold	R112300/189B

Floor mounted 872 mm bath spout

Chrome	112421/29C
Matt Black	B112421/29C
Matt White	W112421/29C
Brushed Nickel	S112421/29C
Brushed Gold	H112421/29C
Brushed Rose Gold	R112421/29C

PEOPLE

PEOPLE

CONTEMPORANEO**ITALIANO**

PEOPLE

153000/F

Single lever basin mixer with waste

Chrome 153000/F

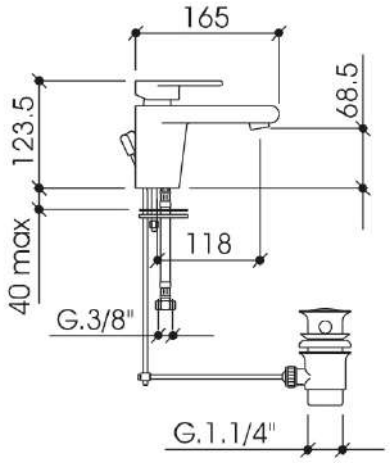

PEOPLE

154020/F

Single lever bidet mixer with waste

Chrome 154020/F

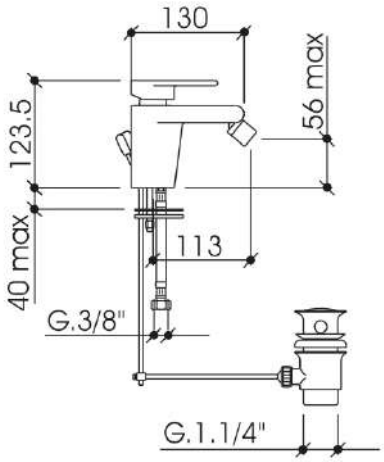

PEOPLE

152327

Exposed single lever shower mixer

Chrome 152327

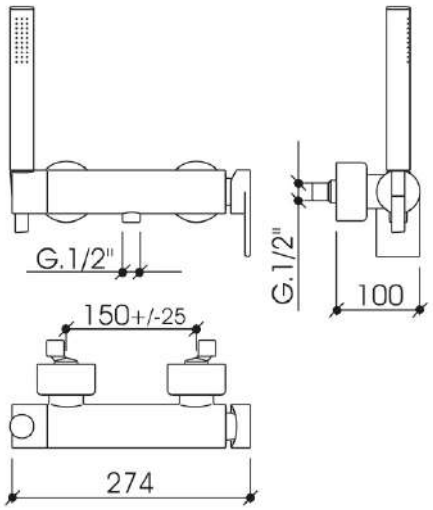

PEOPLE

152328

Exposed single lever shower mixer for shower columns

Chrome 152328

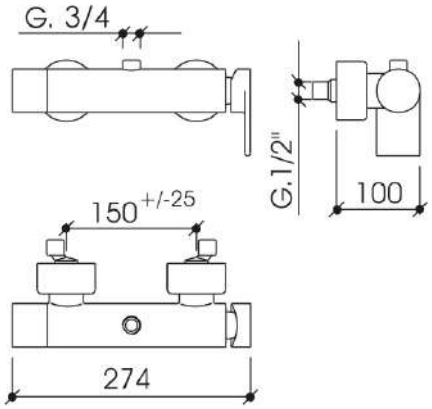

PEOPLE

152320

Exposed single lever bath mixer with diverter and hand shower

Chrome 152320

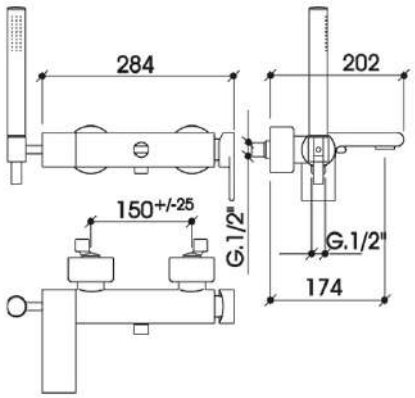

PEOPLE

162400

4 hole deck mounted bath/hand shower mixer with diverter, shower and 230 mm spout

Chrome	162400

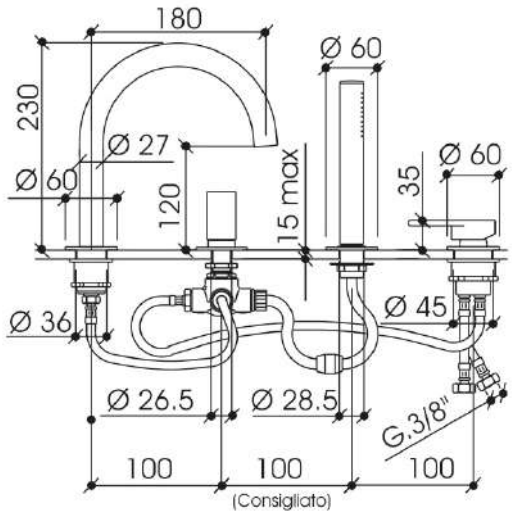

COMPONENTS

Deck mounted bath mixer	
Chrome	162300/19C
Deck mounted bath 2 way diverter	
Chrome	112300/229C
Deck mounted hand shower kit	
Chrome	112300/189B
Wall mounted 230 mm bath spout	
Chrome	112400/29B

PEOPLE

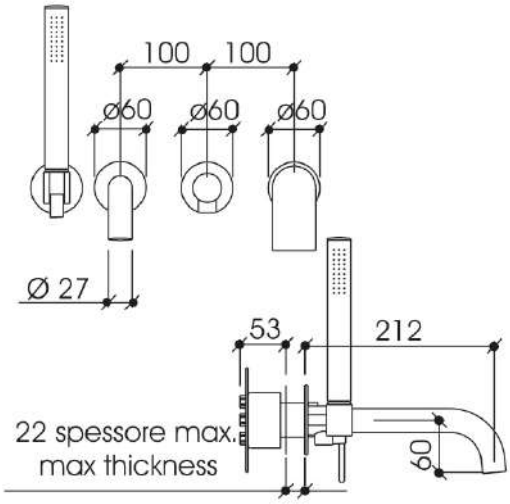

162423

Wall mounted bath/shower mixer with diverter, hand shower and 212 mm spout

Chrome 162423

COMPONENTS

Wall mounted bath/shower mixer with diverter - concealed part

Chrome 162320/19C

Finish set including wall mounted 212 mm spout, flanges and hand shower kit

Chrome 112423E

PEOPLE

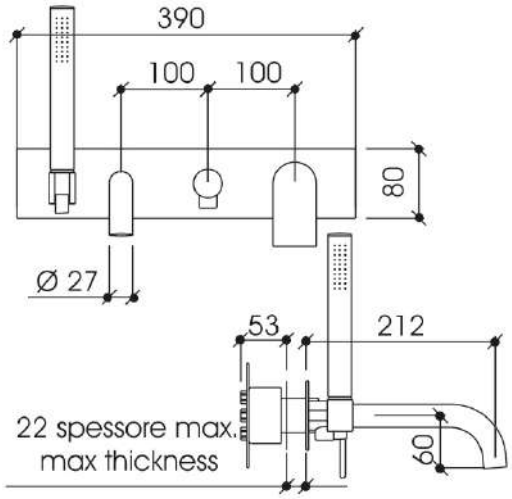

162420

Wall mounted bath/shower mixer with plate, diverter, hand shower and 212 mm spout

Chrome	162420

COMPONENTS

Wall mounted bath/shower mixer with diverter - concealed part

Chrome	162320/19C

Finish set including wall mounted 212 mm spout, plate and hand shower kit

Chrome	112420E

PEOPLE

152032/49B

Wall mounted mixer

Chrome 152032/49B

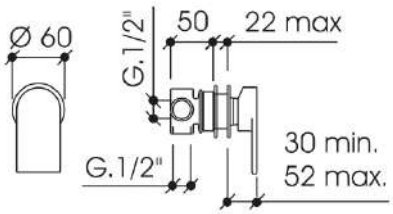

PEOPLE

152322

Wall mounted manual mixer with diverter and round plate

Chrome 152322

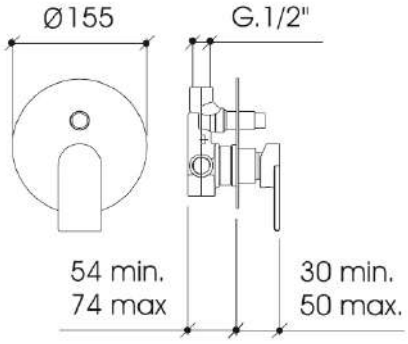

PEOPLE

152321

Wall mounted manual mixer with diverter and rectangular plate

Chrome 152321

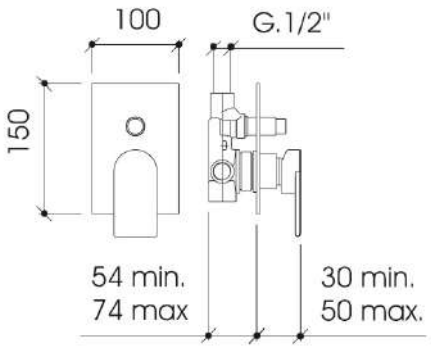

PEOPLE

162327

Wall mounted manual mixer with diverter and hand shower

Chrome 162327

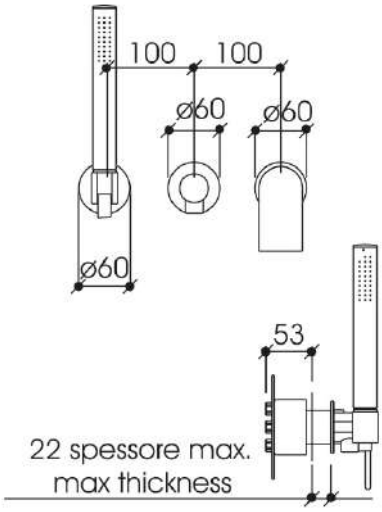

PEOPLE

162326

Wall mounted manual mixer with plate, diverter and hand shower

Chrome	162326

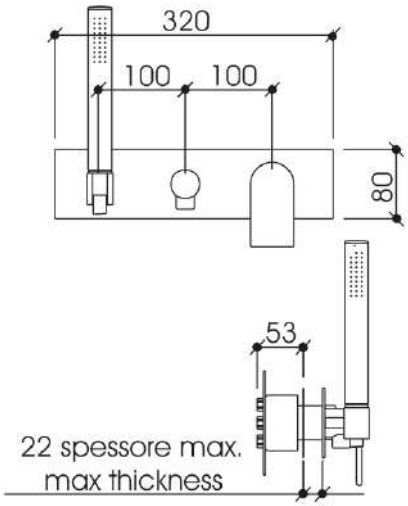

TUBE

CONTEMPORANEO**ITALIANO**

TUBE

143006/F

Single lever basin mixer, height 120 mm with waste

Chrome 143006/F

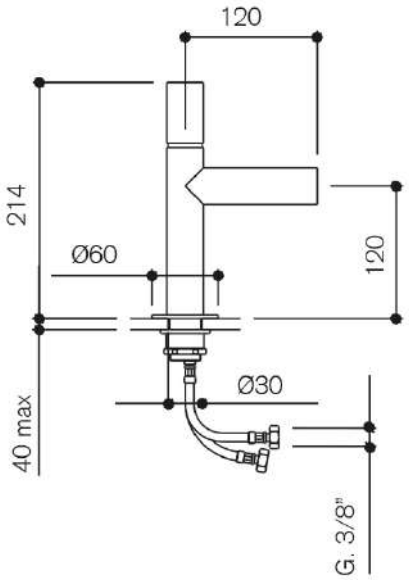

TUBE

143007/F

Single lever basin mixer, height 250 mm with waste

Chrome 143007/F

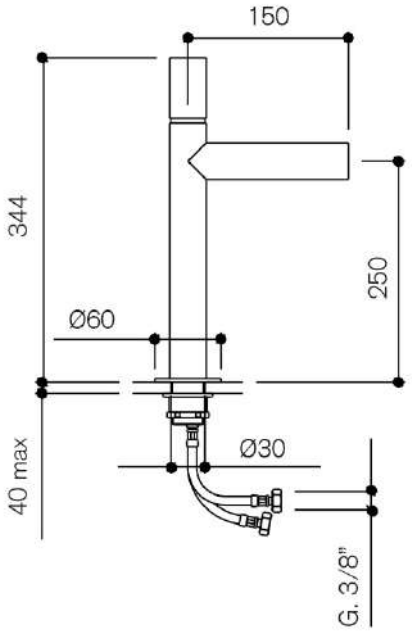

TUBE

143002

Wall mounted basin mixer with spout

Chrome	143002

COMPONENTS

Wall mounted mixer

Chrome	112032/49B

Wall mounted spout

Chrome	142320/29C

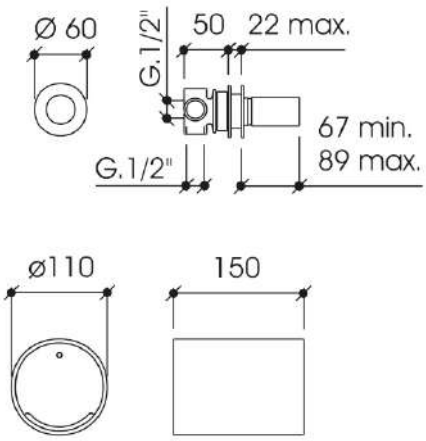

TUBE

143004

Wall mounted basin mixer with 180 mm spout

Chrome 143004

COMPONENTS

Wall mounted basin mixer - concealed part

Chrome 113003/19C

Wall mounted spout and flanges

Chrome 143004E

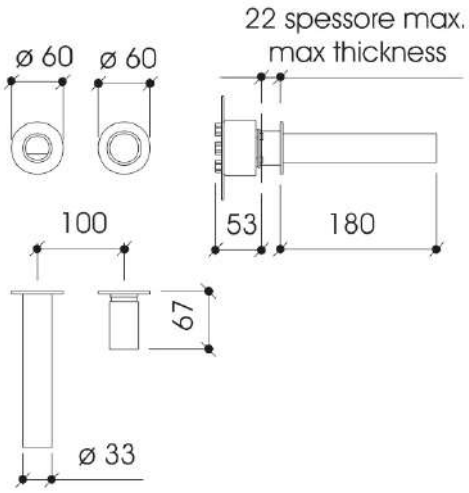

TUBE

143008

Wall mounted basin mixer with 150 mm spout

Chrome	143008

COMPONENTS

Wall mounted basin mixer - concealed part

Chrome	113003/19C

Wall mounted spout and flanges

Chrome	143008E

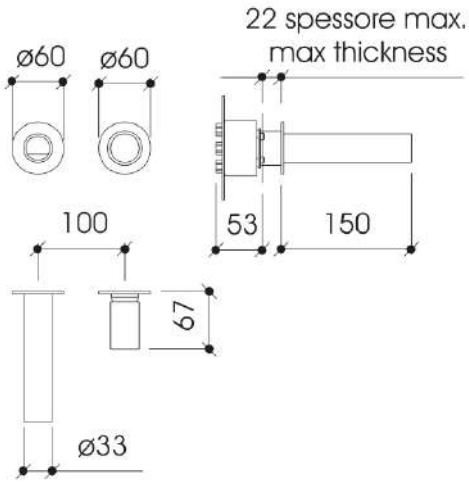

TUBE

143005/F

Single lever bidet mixer with waste

Chrome 143005/F

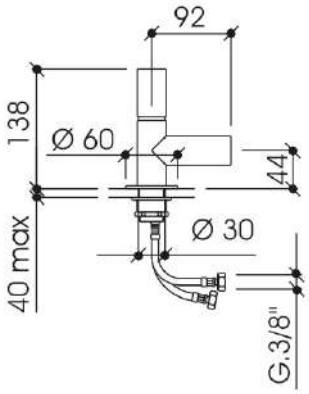

TUBE

142300

3 hole deck mounted bath/shower mixer with diverter, hand shower and wall mounted spout

Chrome	142300

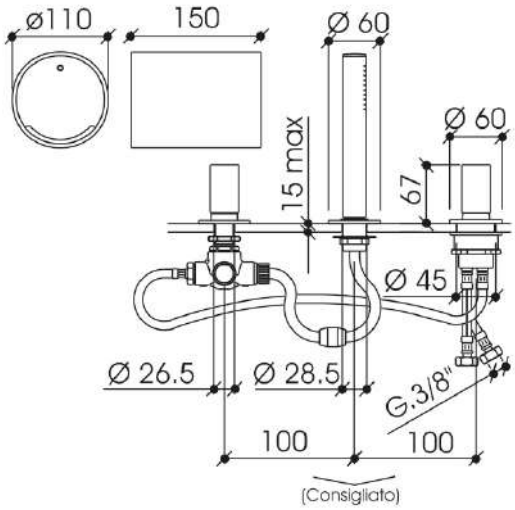

COMPONENTS

Deck mounted mixer

Chrome	112300/19C

Deck mounted bath 2 way diverter

Chrome	112300/229C

Deck mounted hand shower kit

Chrome	112300/189B

Wall mounted spout

Chrome	142320/29C

TUBE

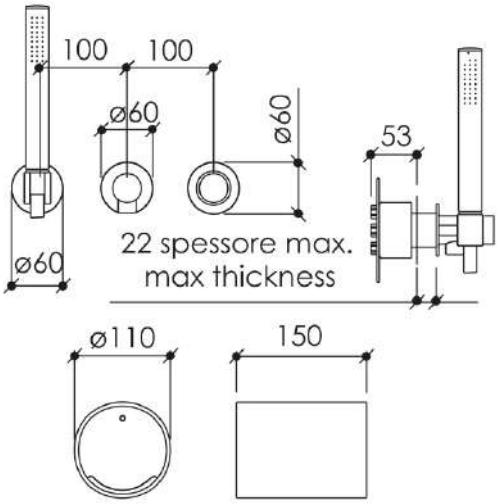

142323

Wall mounted bath/shower mixer with diverter, hand shower and spout

Chrome	142323

COMPONENTS

Wall mounted mixer with diverter - concealed part

Chrome	112322/19C

Finish set including flanges and hand shower kit

Chrome	112324E

Wall mounted spout

Chrome	142320/29C

TUBE

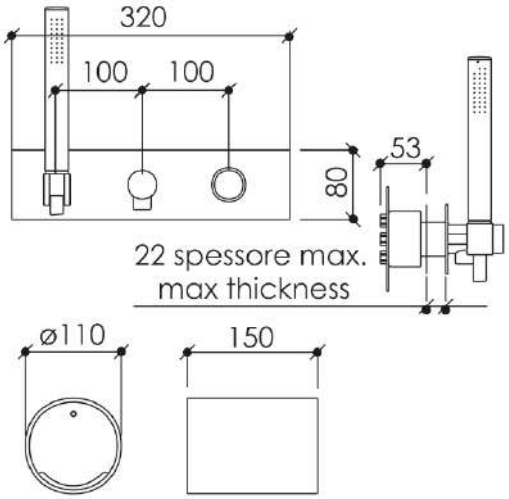

142320

Wall mounted bath/shower mixer with plate, diverter, hand shower and spout

Chrome	142320

COMPONENTS

Wall mounted mixer with diverter - concealed part

Chrome	112322/19C

Finish set including plate and hand shower kit

Chrome	112322E

Wall mounted spout

Chrome	142320/29C

TUBE

142320/29C

Wall mounted spout

Chrome 142320/29C

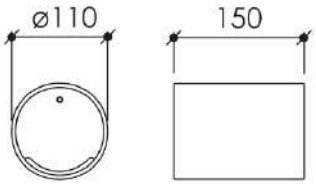

ZERO

CONTEMPORANEO**ITALIANO**

ZERO

113126/F

Single lever mixer basin mixer with ø 18 mm spout with waste

Chrome 113126/F

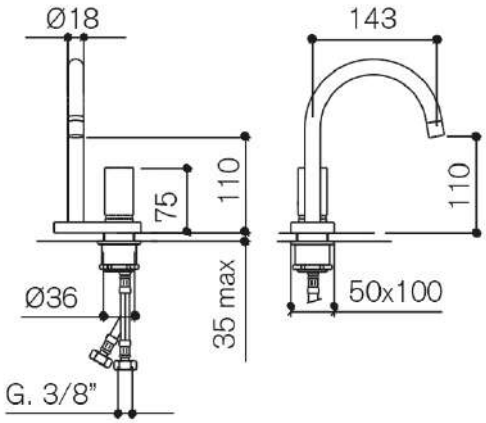

ZERO

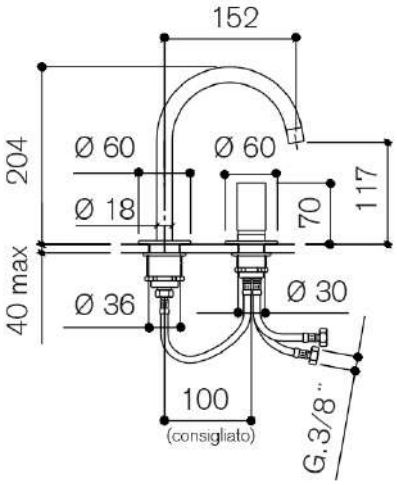

113127/F

2 hole deck mounted basin mixer with 222 mm spout ø 18 mm with waste

Chrome	113127/F
Matt Black	B113127/F
Matt White	W113127/F
Brushed Nickel	S113127/F
Brushed Gold	H113127/F
Brushed Rose Gold	R113127/F

COMPONENTS

Deck mounted mixer

Chrome	113000/19C
Matt Black	B113000/19C
Matt White	W113000/19C
Brushed Nickel	S113000/19C
Brushed Gold	H113000/19C
Brushed Rose Gold	R113000/19C

222 mm wall mounted washbasin spout ø 18 mm

Chrome	113127/29B
Matt Black	B113127/29B
Matt White	W113127/29B
Brushed Nickel	S113127/29B
Brushed Gold	H113127/29B
Brushed Rose Gold	R113127/29B

ZERO

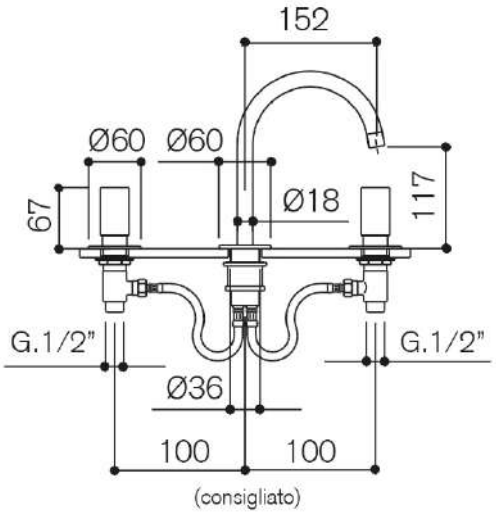

113147/F

3 hole deck mounted basin mixer with 210 mm spout ø 18 mm with waste

Chrome	113147/F
Matt Black	B113147/F
Matt White	W113147/F
Brushed Nickel	S113147/F
Brushed Gold	H113147/F
Brushed Rose Gold	R113147/F

COMPONENTS

Pair of deck mounted valves

Chrome	113020/79B
Matt Black	B113020/79B
Matt White	W113020/79B
Brushed Nickel	S113020/79B
Brushed Gold	H113020/79B
Brushed Rose Gold	R113020/79B

210 mm deck mounted spout ø 18 mm for 3 hole basin mixer

Chrome	113147/29B
Matt Black	B113147/29B
Matt White	W113147/29B
Brushed Nickel	S113147/29B
Brushed Gold	H113147/29B
Brushed Rose Gold	R113147/29B

ZERO

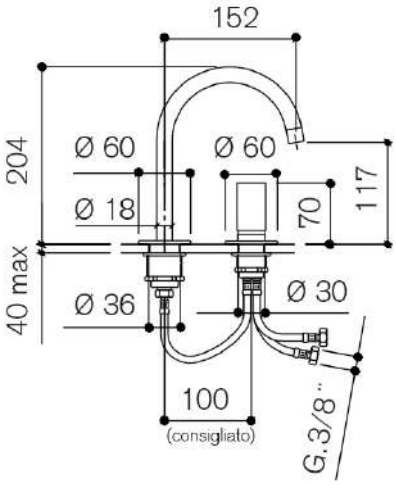

113127S/F

2 hole deck mounted basin mixer with 222 mm swivel spout ø 18 mm with waste

Chrome	113127S/F
Matt Black	B113127S/F
Matt White	W113127S/F
Brushed Nickel	S113127S/F
Brushed Gold	H113127S/F
Brushed Rose Gold	R113127S/F

COMPONENTS

Deck mounted mixer

Chrome	113000/19C
Matt Black	B113000/19C
Matt White	W113000/19C
Brushed Nickel	S113000/19C
Brushed Gold	H113000/19C
Brushed Rose Gold	R113000/19C

222 mm deck mounted basin swivel spout ø 18 mm

Chrome	113137/29B
Matt Black	B113137/29B
Matt White	W113137/29B
Brushed Nickel	S113137/29B
Brushed Gold	H113137/29B
Brushed Rose Gold	R113137/29B

360 system
ON OFF

Bocca girevole/Swivel spout

ZERO

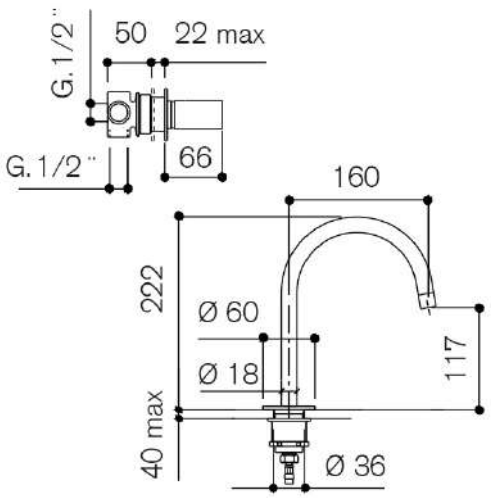

113114/F

Wall mounted basin mixer with deck mounted 222 mm spout ø 18 mm with waste

Chrome	113114/F
Matt Black	B113114/F
Matt White	W113114/F
Brushed Nickel	S113114/F
Brushed Gold	H113114/F
Brushed Rose Gold	R113114/F

COMPONENTS

Wall mounted mixer

Chrome	112032/49B
Matt Black	B112032/49B
Matt White	W112032/49B
Brushed Nickel	S112032/49B
Brushed Gold	H112032/49B
Brushed Rose Gold	R112032/49B

222 mm wall mounted washbasin spout ø 18 mm

Chrome	113127/29B
Matt Black	B113127/29B
Matt White	W113127/29B
Brushed Nickel	S113127/29B
Brushed Gold	H113127/29B
Brushed Rose Gold	R113127/29B

ZERO

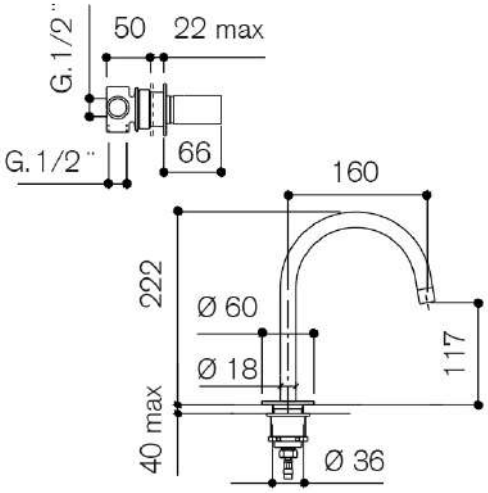

113114S/F

Wall mounted basin mixer with deck mounted 222 mm swivel spout ø 18 mm with waste

Chrome	113114S/F
Matt Black	B113114S/F
Matt White	W113114S/F
Brushed Nickel	S113114S/F
Brushed Gold	H113114S/F
Brushed Rose Gold	R113114S/F

COMPONENTS

Wall mounted mixer

Chrome	112032/49B
Matt Black	B112032/49B
Matt White	W112032/49B
Brushed Nickel	S112032/49B
Brushed Gold	H112032/49B
Brushed Rose Gold	R112032/49B

222 mm deck mounted basin swivel spout ø 18 mm

Chrome	113137/29B
Matt Black	B113137/29B
Matt White	W113137/29B
Brushed Nickel	S113137/29B
Brushed Gold	H113137/29B
Brushed Rose Gold	R113137/29B

360 system
ON OFF

Bocca girevole/Swivel spout

ZERO

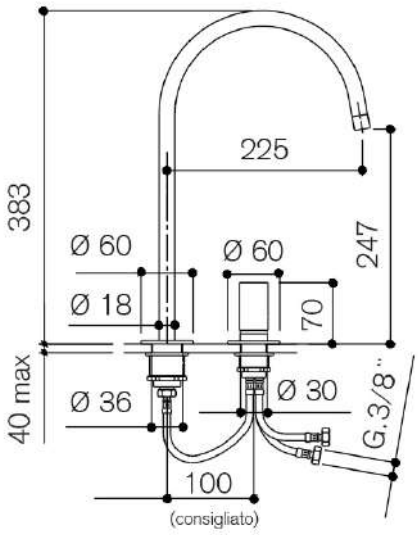

113128/F

2 hole deck mounted basin mixer with 383 mm spout ø 18 mm with waste

Chrome	113128/F
Matt Black	B113128/F
Matt White	W113128/F
Brushed Nickel	S113128/F
Brushed Gold	H113128/F
Brushed Rose Gold	R113128/F

COMPONENTS

Deck mounted mixer

Chrome	113000/19C
Matt Black	B113000/19C
Matt White	W113000/19C
Brushed Nickel	S113000/19C
Brushed Gold	H113000/19C
Brushed Rose Gold	R113000/19C

383 mm wall mounted washbasin spout ø 18 mm

Chrome	113128/29B
Matt Black	B113128/29B
Matt White	W113128/29B
Brushed Nickel	S113128/29B
Brushed Gold	H113128/29B
Brushed Rose Gold	R113128/29B

ZERO

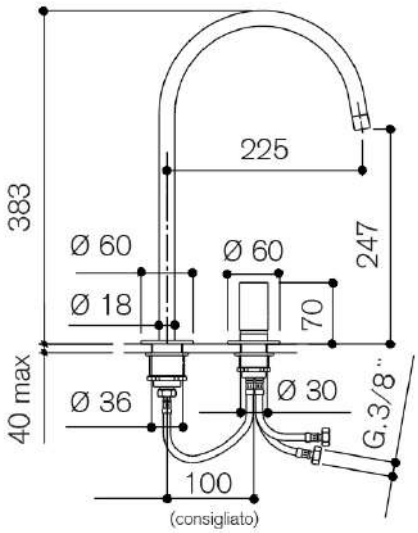

113128S/F

2 hole deck mounted basin mixer with 383 mm swivel spout ø 18 mm with waste

Chrome	113128S/F
Matt Black	B113128S/F
Matt White	W113128S/F
Brushed Nickel	S113128S/F
Brushed Gold	H113128S/F
Brushed Rose Gold	R113128S/F

COMPONENTS

Deck mounted mixer

Chrome	113000/19C
Matt Black	B113000/19C
Matt White	W113000/19C
Brushed Nickel	S113000/19C
Brushed Gold	H113000/19C
Brushed Rose Gold	R113000/19C

383 mm deck mounted basin swivel spout ø 18 mm

Chrome	113138/29B
Matt Black	B113138/29B
Matt White	W113138/29B
Brushed Nickel	S113138/29B
Brushed Gold	H113138/29B
Brushed Rose Gold	R113138/29B

360 system
ON OFF

Bocca girevole/Swivel spout

ZERO

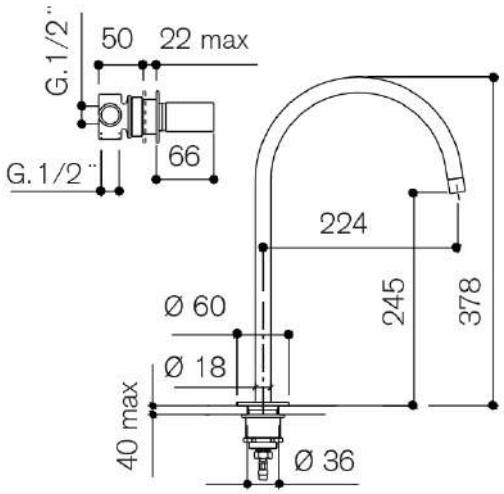

113115/F

Wall mounted basin mixer with deck mounted 383 mm spout ø 18 mm and waste

Chrome	113115/F
Matt Black	B113115/F
Matt White	W113115/F
Brushed Nickel	S113115/F
Brushed Gold	H113115/F
Brushed Rose Gold	R113115/F

COMPONENTS

Wall mounted mixer

Chrome	112032/49B
Matt Black	B112032/49B
Matt White	W112032/49B
Brushed Nickel	S112032/49B
Brushed Gold	H112032/49B
Brushed Rose Gold	R112032/49B

383 mm wall mounted washbasin spout ø 18 mm

Chrome	113128/29B
Matt Black	B113128/29B
Matt White	W113128/29B
Brushed Nickel	S113128/29B
Brushed Gold	H113128/29B
Brushed Rose Gold	R113128/29B

ZERO

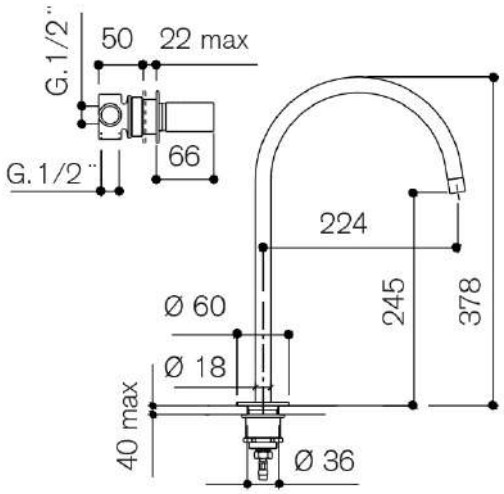

113115S/F

Wall mounted basin mixer with deck mounted 383 mm swivel spout ø 18 mm with waste

Chrome	113115S/F
Matt Black	B113115S/F
Matt White	W113115S/F
Brushed Nickel	S113115S/F
Brushed Gold	H113115S/F
Brushed Rose Gold	R113115S/F

COMPONENTS

Wall mounted mixer

Chrome	112032/49B
Matt Black	B112032/49B
Matt White	W112032/49B
Brushed Nickel	S112032/49B
Brushed Gold	H112032/49B
Brushed Rose Gold	R112032/49B

383 mm deck mounted basin swivel spout ø 18 mm

Chrome	113138/29B
Matt Black	B113138/29B
Matt White	W113138/29B
Brushed Nickel	S113138/29B
Brushed Gold	H113138/29B
Brushed Rose Gold	R113138/29B

360 system
ON OFF

Bocca girevole/Swivel spout

ZERO

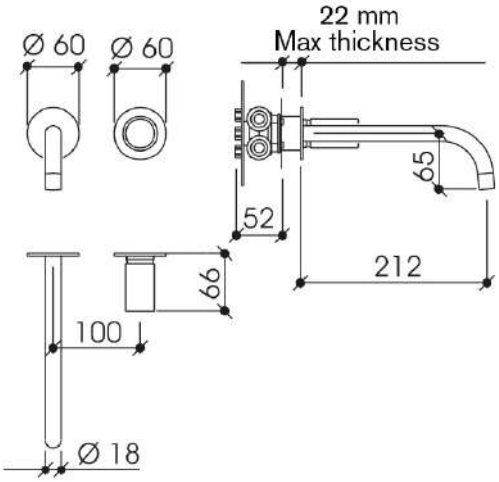

113161

Wall mounted basin mixer with 212 mm spout ø 18 mm

Chrome	113161
Matt Black	B113161
Matt White	W113161
Brushed Nickel	S113161
Brushed Gold	H113161
Brushed Rose Gold	R113161

COMPONENTS

Wall mounted basin mixer - concealed part

Chrome	113161/19C
Matt Black	B113161/19C
Matt White	W113161/19C
Brushed Nickel	S113161/19C
Brushed Gold	H113161/19C
Brushed Rose Gold	R113161/19C

Finish set including 212 mm spout ø 18 mm and flanges

Chrome	113161E
Matt Black	B113161E
Matt White	W113161E
Brushed Nickel	S113161E
Brushed Gold	H113161E
Brushed Rose Gold	R113161E

ZERO

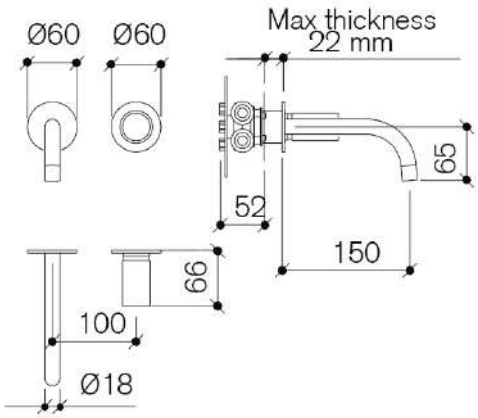

113171

Wall mounted basin mixer with 150 mm spout ø 18 mm

Chrome	113171
Matt Black	B113171
Matt White	W113171
Brushed Nickel	S113171
Brushed Gold	H113171
Brushed Rose Gold	R113171

COMPONENTS

Wall mounted basin mixer - concealed part

Chrome	113161/19C
Matt Black	B113161/19C
Matt White	W113161/19C
Brushed Nickel	S113161/19C
Brushed Gold	H113161/19C
Brushed Rose Gold	R113161/19C

Finish set including 150 mm spout ø 18 mm and flanges

Chrome	113171E
Matt Black	B113171E
Matt White	W113171E
Brushed Nickel	S113171E
Brushed Gold	H113171E
Brushed Rose Gold	R113171E

ZERO

113162

Wall mounted basin mixer with 212 mm spout ø 18 mm and plate

Chrome 113162

COMPONENTS

Wall mounted basin mixer - concealed part

Chrome 113161/19C

Finish set including 212 mm spout ø 18 mm and plate

Chrome 113162E

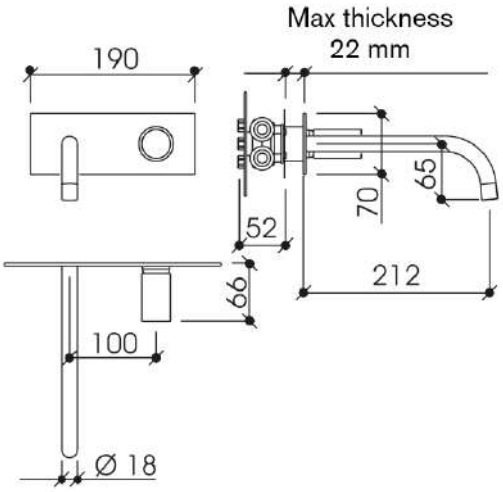

ZERO

113172

Wall mounted basin mixer with 150 mm spout ø 18 mm and plate

Chrome 113172

COMPONENTS

Wall mounted basin mixer - concealed part

Chrome 113161/19C

Finish set including 150 mm spout ø 18 mm and plate

Chrome 113172E

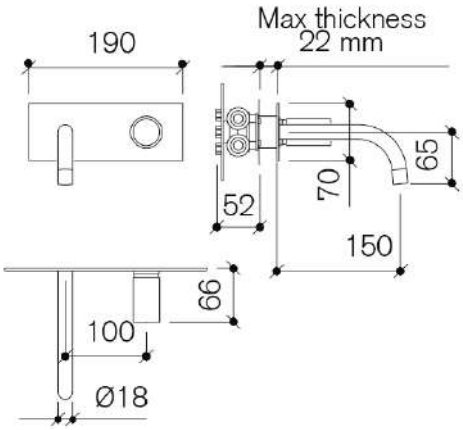

ZERO

114125/F

Single lever bidet mixer with ø 18 mm spout with waste

Chrome 114125/F

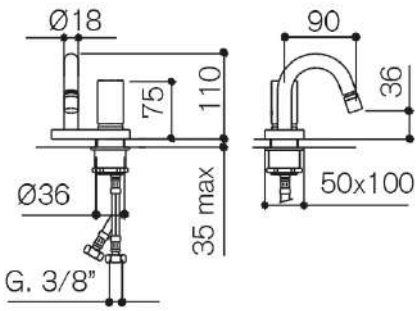

ZERO

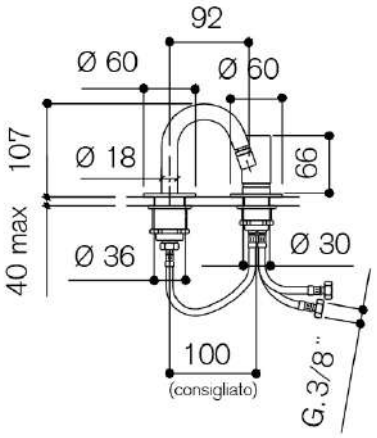

114127/F

2 hole deck mounted bidet mixer with 107 mm spout ø 18 mm with waste

Chrome	114127/F
Matt Black	B114127/F
Matt White	W114127/F
Brushed Nickel	S114127/F
Brushed Gold	H114127/F
Brushed Rose Gold	R114127/F

COMPONENTS

Deck mounted mixer

Chrome	113000/19C
Matt Black	B113000/19C
Matt White	W113000/19C
Brushed Nickel	S113000/19C
Brushed Gold	H113000/19C
Brushed Rose Gold	R113000/19C

Deck mounted 107 mm bidet spout ø 18 mm

Chrome	114127/29B
Matt Black	B114127/29B
Matt White	W114127/29B
Brushed Nickel	S114127/29B
Brushed Gold	H114127/29B
Brushed Rose Gold	R114127/29B

ZERO

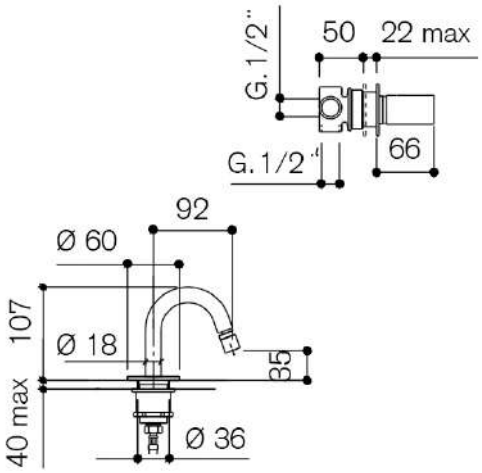

114114/F

Wall mounted bidet mixer with deck mounted 107 mm spout ø 18 mm with waste

Chrome	114114/F
Matt Black	B114114/F
Matt White	W114114/F
Brushed Nickel	S114114/F
Brushed Gold	H114114/F
Brushed Rose Gold	R114114/F

COMPONENTS

Wall mounted mixer

Chrome	112032/49B
Matt Black	B112032/49B
Matt White	W112032/49B
Brushed Nickel	S112032/49B
Brushed Gold	H112032/49B
Brushed Rose Gold	R112032/49B

Deck mounted 107 mm bidet spout ø 18 mm

Chrome	114127/29B
Matt Black	B114127/29B
Matt White	W114127/29B
Brushed Nickel	S114127/29B
Brushed Gold	H114127/29B
Brushed Rose Gold	R114127/29B

ZERO

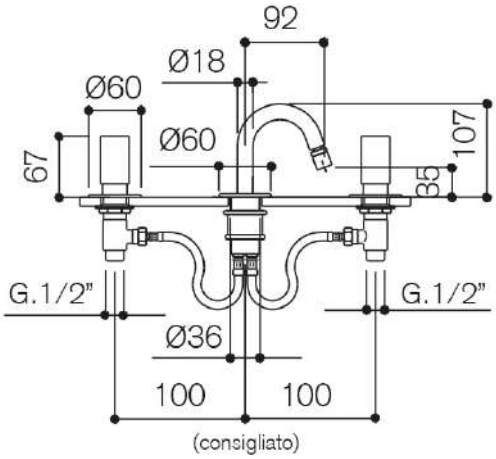

114147/F

3 hole deck mounted bidet mixer with 107 mm spout ø 18 mm with waste

Chrome	114147/F
Matt Black	B114147/F
Matt White	W114147/F
Brushed Nickel	S114147/F
Brushed Gold	H114147/F
Brushed Rose Gold	R114147/F

COMPONENTS

Pair of deck mounted valves

Chrome	113020/79B
Matt Black	B113020/79B
Matt White	W113020/79B
Brushed Nickel	S113020/79B
Brushed Gold	H113020/79B
Brushed Rose Gold	R113020/79B

107 mm deck mounted spout ø 18 mm for 3 hole basin mixer

Chrome	114147/29B
Matt Black	B114147/29B
Matt White	W114147/29B
Brushed Nickel	S114147/29B
Brushed Gold	H114147/29B
Brushed Rose Gold	R114147/29B

ZERO

113100/F

2 hole deck mounted basin mixer with 206 mm spout with waste

Chrome	113100/F
Crude	K113100/F

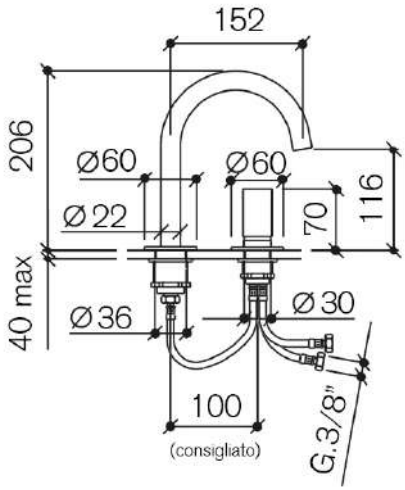

COMPONENTS

Deck mounted mixer

Chrome	113000/19C
Crude	K113000/19C

Deck mounted 206 mm basin spout

Chrome	113100/29B
Crude	K113100/29B

ZERO

113104/F

Wall mounted basin mixer with deck mounted 206 mm spout with waste

Chrome	113104/F
Crude	K113104/F

COMPONENTS

Wall mounted mixer

Chrome	112032/49B
Crude	K112032/49B

Deck mounted 206 mm basin spout

Chrome	113100/29B
Crude	K113100/29B

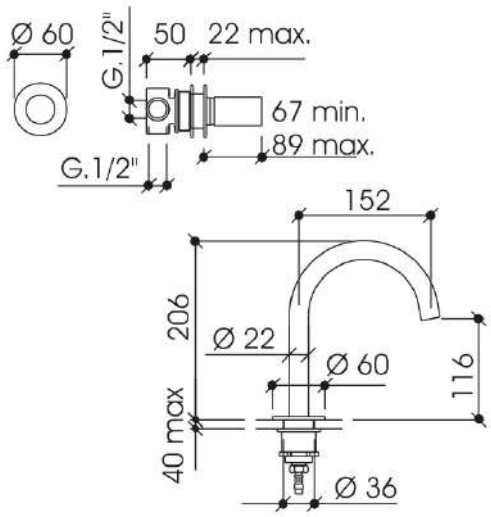

ZERO

113120/F

3 hole deck mounted basin mixer with 206 mm spout with waste

Chrome	113120/F
Crude	K113120/F

COMPONENTS

Pair of deck mounted valves

Chrome	113020/79B
Crude	K113020/79B

Deck mounted 206 mm spout for 3 hole basin mixer

Chrome	113120/29B
Crude	K113120/29B

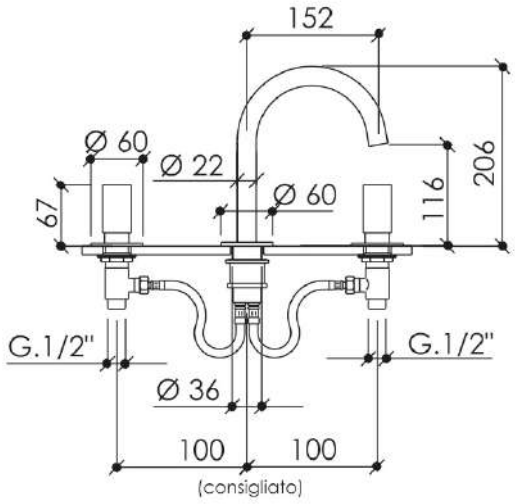

ZERO

113105/F

Single lever basin mixer with waste

Chrome 113105/F

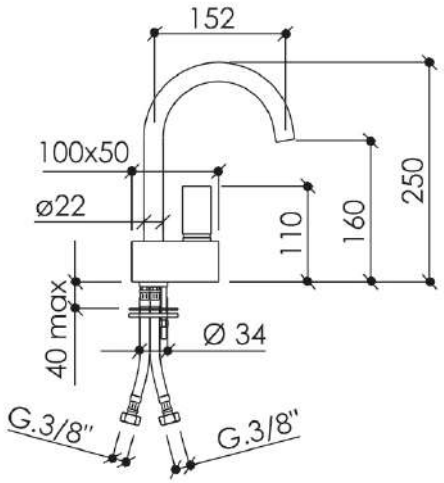

ZERO

115100

Single lever basin/sink mixer with swivel spout

Chrome 115100

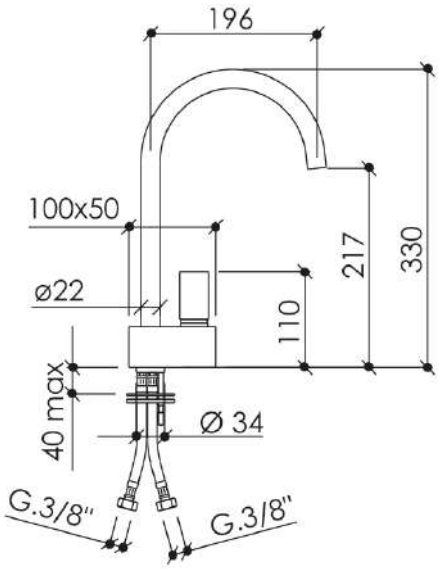

ZERO

115101

Single lever sink mixer with swivel spout ø 18 mm

Chrome 115101

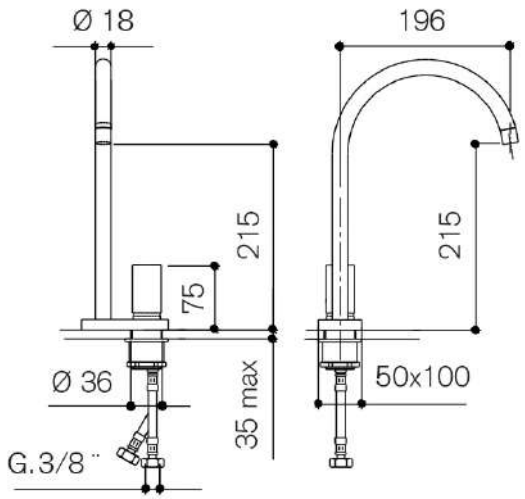

ZERO

113102

Wall mounted basin mixer with 212 mm spout

Chrome	113102
Crude	K113102

COMPONENTS

Wall mounted basin mixer - concealed part

Chrome	113003/19C
Crude	K113003/19C

Finish set including 212 mm spout and flanges

Chrome	113102E
Crude	K113102E

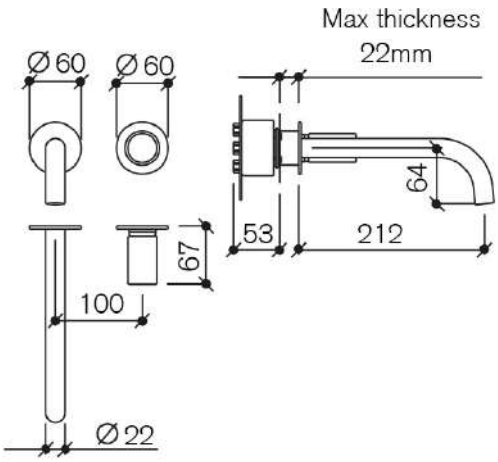

ZERO

113103

Wall mounted basin mixer with 212 mm spout and plate

Chrome 113103

COMPONENTS

Wall mounted basin mixer - concealed part

Chrome 113003/19C

Finish set including 212 mm spout and plate

Chrome 113103E

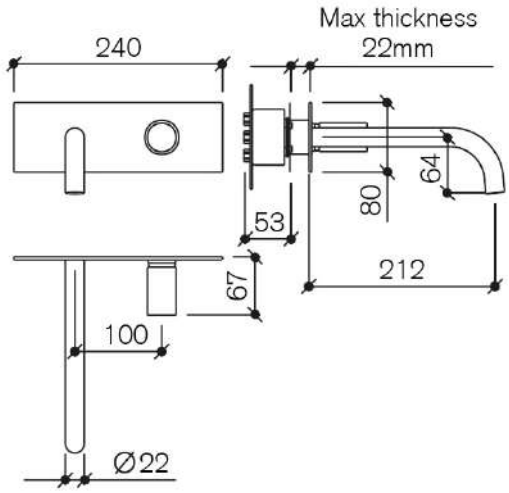

ZERO

113108

Wall mounted basin mixer with 150 mm spout

Chrome	113108
Crude	K113108

COMPONENTS

Wall mounted basin mixer - concealed part

Chrome	113003/19C
Crude	K113003/19C

Finish set including 150 mm spout and flanges

Chrome	113108E
Crude	K113108E

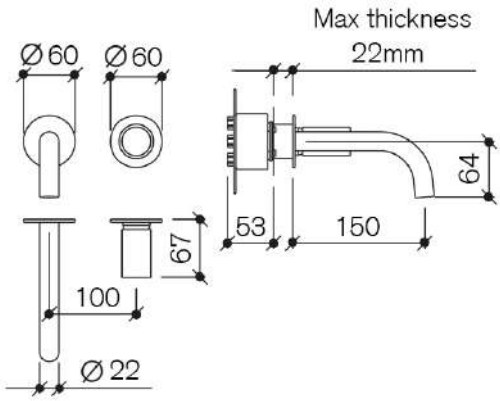

ZERO

113109

Wall mounted basin mixer with 150 mm spout and plate

Chrome 113109

COMPONENTS

Wall mounted basin mixer - concealed part

Chrome 113003/19C

Finish set including 150 mm spout and plate

Chrome 113109E

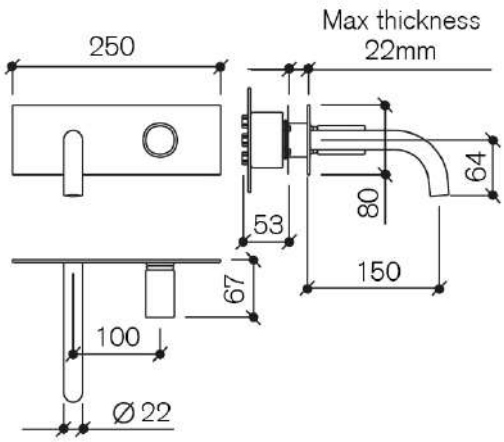

ZERO

113140

Deck mounted basin mixer with 212 mm wall mounted spout

Chrome	113140
Crude	K113140

COMPONENTS

Deck mounted mixer

Chrome	113000/19C
Crude	K113000/19C

Wall mounted 212 mm basin spout

Chrome	113131
Crude	K113131

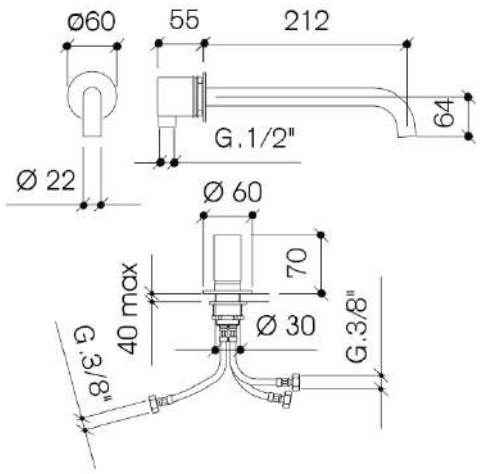

ZERO

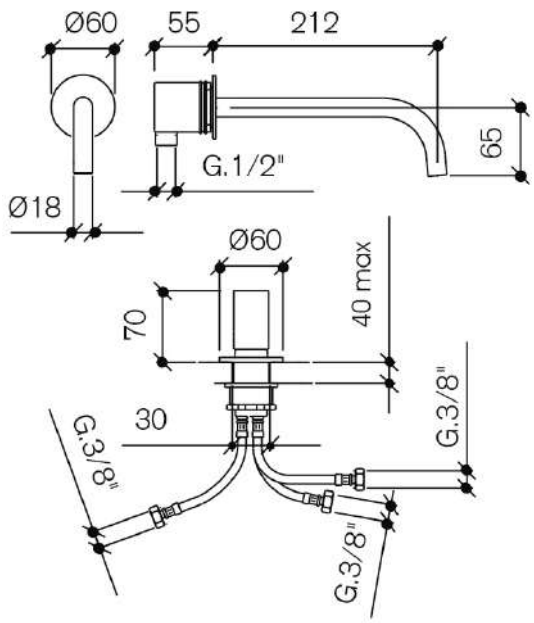

113160

Deck mounted basin mixer with wall mounted 212 mm spout ø 18 mm

Chrome	113160
Matt Black	B113160
Matt White	W113160
Brushed Nickel	S113160
Brushed Gold	H113160
Brushed Rose Gold	R113160

COMPONENTS

Deck mounted mixer

Chrome	113000/19C
Matt Black	B113000/19C
Matt White	W113000/19C
Brushed Nickel	S113000/19C
Brushed Gold	H113000/19C
Brushed Rose Gold	R113000/19C

212 mm wall mounted basin spout ø 18 mm

Chrome	313151
Matt Black	B313151
Matt White	W313151
Brushed Nickel	S313151
Brushed Gold	H313151
Brushed Rose Gold	R313151

ZERO

113141

Deck mounted basin mixer with 150 mm wall mounted spout

Chrome	113141
Crude	K113141

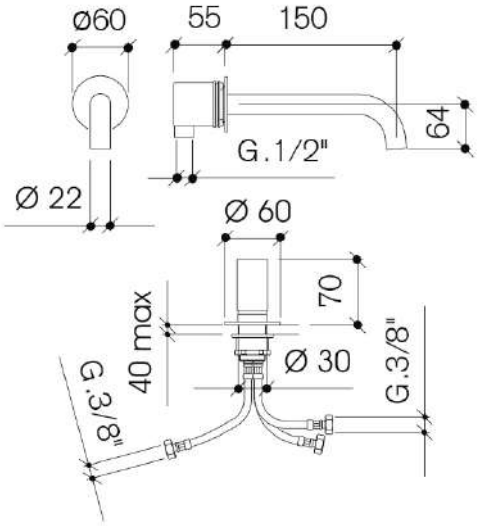

COMPONENTS

Deck mounted mixer

Chrome	113000/19C
Crude	K113000/19C

Wall mounted 150 mm basin spout

Chrome	113132
Crude	K113132

ZERO

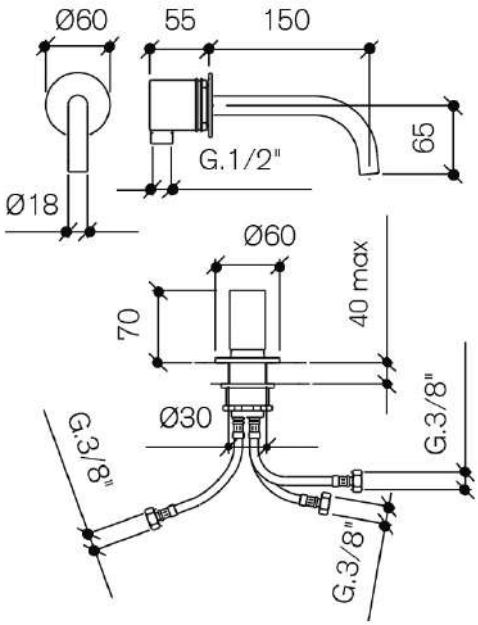

113170

Deck mounted basin mixer with wall mounted 150 mm spout ø 18 mm

Chrome	113170
Matt Black	B113170
Matt White	W113170
Brushed Nickel	S113170
Brushed Gold	H113170
Brushed Rose Gold	R113170

COMPONENTS

Deck mounted mixer

Chrome	113000/19C
Matt Black	B113000/19C
Matt White	W113000/19C
Brushed Nickel	S113000/19C
Brushed Gold	H113000/19C
Brushed Rose Gold	R113000/19C

150 mm wall mounted basin spout ø 18 mm

Chrome	313152
Matt Black	B313152
Matt White	W313152
Brushed Nickel	S313152
Brushed Gold	H313152
Brushed Rose Gold	R313152

ZERO

114120/F

2 hole deck mounted bidet mixer with 120 mm spout with waste

Chrome	114120/F
Crude	K114120/F

COMPONENTS

Deck mounted mixer

Chrome	113000/19C
Crude	K113000/19C

Deck mounted 120 mm basin / bidet spout

Chrome	114120/29B
Crude	K114120/29B

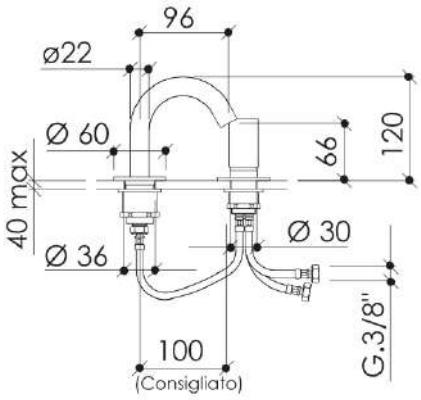

ZERO

114121/F

Wall mounted bidet mixer with 120 mm deck mounted spout with waste

Chrome	114121/F
Crude	K114121/F

COMPONENTS

Wall mounted mixer

Chrome	112032/49B
Crude	K112032/49B

Deck mounted 120 mm basin / bidet spout

Chrome	114120/29B
Crude	K114120/29B

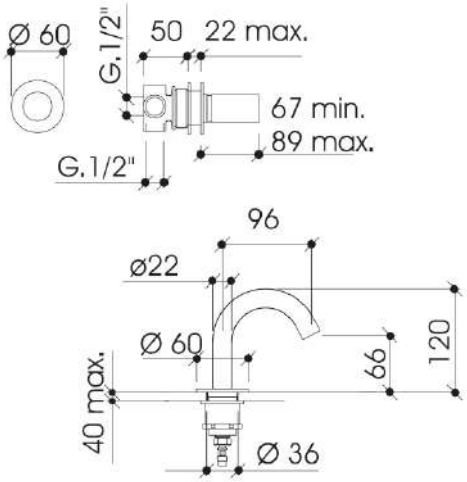

ZERO

114123/F

3 hole deck mounted bidet mixer with 120 mm spout with waste

Chrome	114123/F
Crude	K114123/F

COMPONENTS

Pair of deck mounted valves

Chrome	113020/79B
Crude	K113020/79B

Deck mounted 120 mm basin / bidet spout for 3 hole mixer

Chrome	114123/29B
Crude	K114123/29B

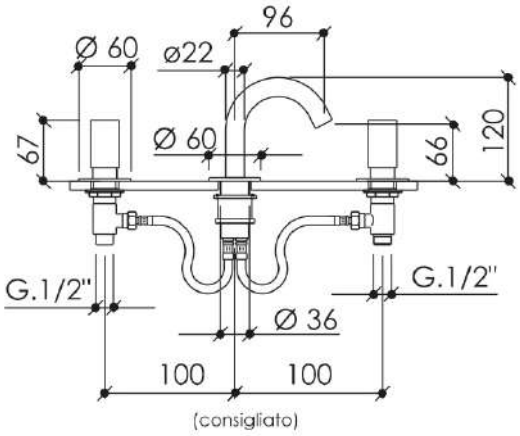

ZERO

114122/F

Single lever bidet mixer with waste

Chrome 114122/F

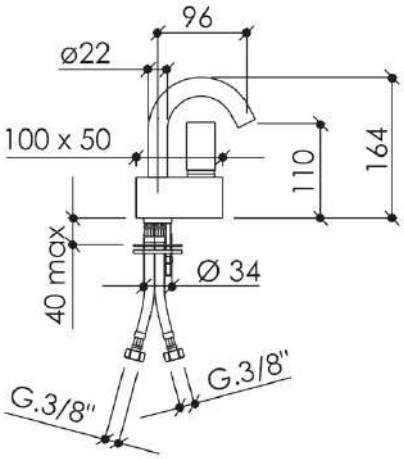

ZERO

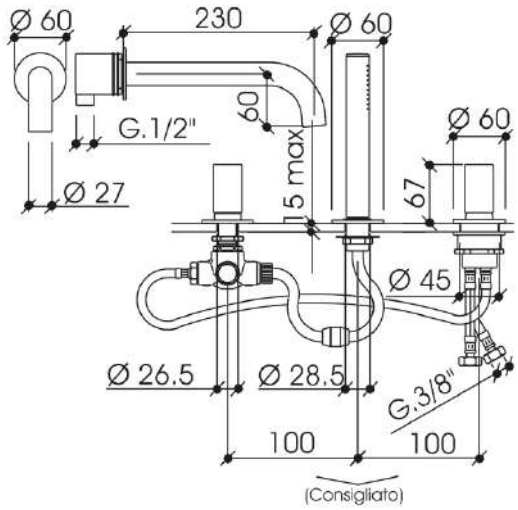

112405

3 hole deck mounted bath/shower mixer with diverter, hand shower and 212 mm wall mounted spout

Chrome	112405
Matt Black	B112405
Matt White	W112405
Brushed Nickel	S112405
Brushed Gold	H112405
Brushed Rose Gold	R112405
Crude	K112405

COMPONENTS

Deck mounted mixer

Chrome	112300/19C
Matt Black	B112300/19C
Matt White	W112300/19C
Brushed Nickel	S112300/19C
Brushed Gold	H112300/19C
Brushed Rose Gold	R112300/19C
Crude	K112300/19C

Deck mounted bath 2 way diverter

Chrome	112300/229C
Matt Black	B112300/229C
Matt White	W112300/229C
Brushed Nickel	S112300/229C
Brushed Gold	H112300/229C
Brushed Rose Gold	R112300/229C
Crude	K112300/229C

Deck mounted hand shower kit

Chrome	112300/189B
Matt Black	B112300/189B
Matt White	W112300/189B
Brushed Nickel	S112300/189B
Brushed Gold	H112300/189B
Brushed Rose Gold	R112300/189B
Crude	K112300/189B

Wall mounted 212 mm bath spout

Chrome	112134/19B
Matt Black	B112134/19B
Matt White	W112134/19B
Brushed Nickel	S112134/19B
Brushed Gold	H112134/19B
Brushed Rose Gold	R112134/19B
Crude	K112134/19B

ZERO

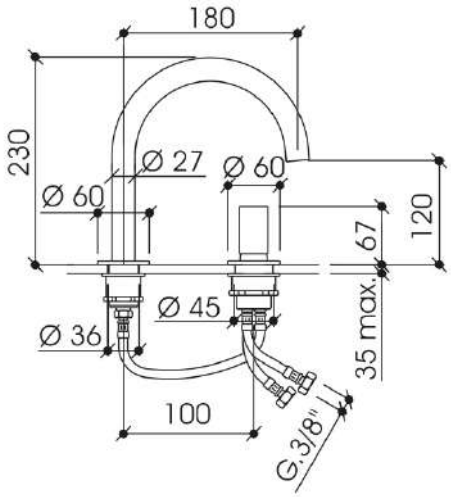

112407

2 hole deck mounted bath mixer with 230 mm spout

Chrome	112407
Matt Black	B112407
Matt White	W112407
Brushed Nickel	S112407
Brushed Gold	H112407
Brushed Rose Gold	R112407
Crude	K112407

COMPONENTS

Deck mounted mixer

Chrome	112300/19C
Matt Black	B112300/19C
Matt White	W112300/19C
Brushed Nickel	S112300/19C
Brushed Gold	H112300/19C
Brushed Rose Gold	R112300/19C
Crude	K112300/19C

Wall mounted 230 mm bath spout

Chrome	112400/29B
Matt Black	B112400/29B
Matt White	W112400/29B
Brushed Nickel	S112400/29B
Brushed Gold	H112400/29B
Brushed Rose Gold	R112400/29B
Crude	K112400/29B

ZERO

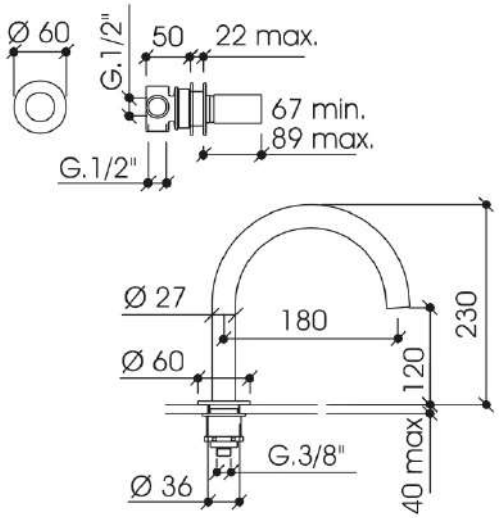

112406

Wall mounted bath mixer with deck mounted 230 mm spout

Chrome	112406
Matt Black	B112406
Matt White	W112406
Brushed Nickel	S112406
Brushed Gold	H112406
Brushed Rose Gold	R112406
Crude	K112406

COMPONENTS

Wall mounted mixer

Chrome	112032/49B
Matt Black	B112032/49B
Matt White	W112032/49B
Brushed Nickel	S112032/49B
Brushed Gold	H112032/49B
Brushed Rose Gold	R112032/49B
Crude	K112032/49B

Wall mounted 230 mm bath spout

Chrome	112400/29B
Matt Black	B112400/29B
Matt White	W112400/29B
Brushed Nickel	S112400/29B
Brushed Gold	H112400/29B
Brushed Rose Gold	R112400/29B
Crude	K112400/29B

ZERO

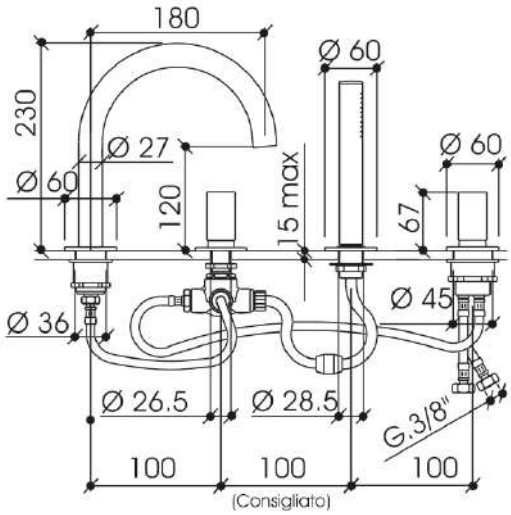

112400

4 hole deck mounted bath/shower mixer with diverter, hand shower and 230 mm spout

Chrome	112400
Matt Black	B112400
Matt White	W112400
Brushed Nickel	S112400
Brushed Gold	H112400
Brushed Rose Gold	R112400
Crude	K112400

COMPONENTS

Deck mounted mixer

Chrome	112300/19C
Matt Black	B112300/19C
Matt White	W112300/19C
Brushed Nickel	S112300/19C
Brushed Gold	H112300/19C
Brushed Rose Gold	R112300/19C
Crude	K112300/19C

Deck mounted bath 2 way diverter

Chrome	112300/229C
Matt Black	B112300/229C
Matt White	W112300/229C
Brushed Nickel	S112300/229C
Brushed Gold	H112300/229C
Brushed Rose Gold	R112300/229C
Crude	K112300/229C

Deck mounted hand shower kit

Chrome	112300/189B
Matt Black	B112300/189B
Matt White	W112300/189B
Brushed Nickel	S112300/189B
Brushed Gold	H112300/189B
Brushed Rose Gold	R112300/189B
Crude	K112300/189B

Wall mounted 230 mm bath spout

Chrome	112400/29B
Matt Black	B112400/29B
Matt White	W112400/29B
Brushed Nickel	S112400/29B
Brushed Gold	H112400/29B
Brushed Rose Gold	R112400/29B
Crude	K112400/29B

ZERO

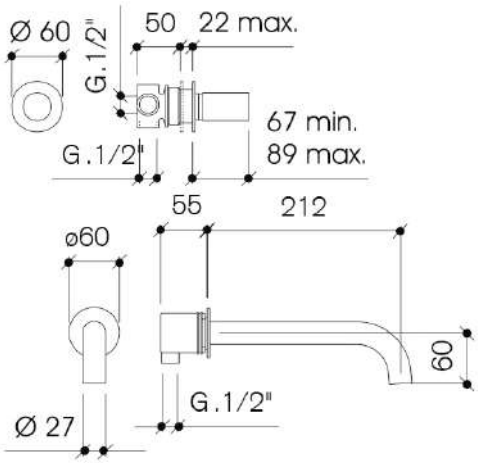

112144

Wall mounted bath mixer with 212 mm spout

Chrome	112144
Matt Black	B112144
Matt White	W112144
Brushed Nickel	S112144
Brushed Gold	H112144
Brushed Rose Gold	R112144
Crude	K112144

COMPONENTS

Wall mounted mixer

Chrome	112032/49B
Matt Black	B112032/49B
Matt White	W112032/49B
Brushed Nickel	S112032/49B
Brushed Gold	H112032/49B
Brushed Rose Gold	R112032/49B
Crude	K112032/49B

Wall mounted 212 mm bath spout

Chrome	112134/19B
Matt Black	B112134/19B
Matt White	W112134/19B
Brushed Nickel	S112134/19B
Brushed Gold	H112134/19B
Brushed Rose Gold	R112134/19B
Crude	K112134/19B

ZERO

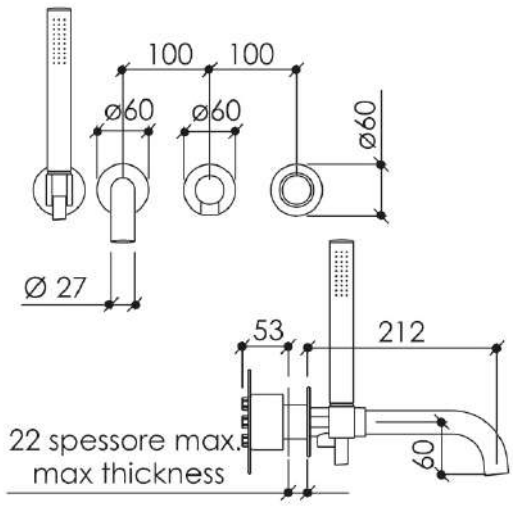

112423

Wall mounted bath/shower mixer with diverter, hand shower and 212 mm spout

Chrome	112423
Matt Black	B112423
Matt White	W112423
Brushed Nickel	S112423
Brushed Gold	H112423
Brushed Rose Gold	R112423
Crude	K112423

COMPONENTS

Wall mounted bath shower mixer with diverter - concealed part

Chrome	112320/19C
Matt Black	B112320/19C
Matt White	W112320/19C
Brushed Nickel	S112320/19C
Brushed Gold	H112320/19C
Brushed Rose Gold	R112320/19C
Crude	K112320/19C

Finish set including wall mounted 212 mm spout, flanges and hand shower kit

Chrome	112423E
Matt Black	B112423E
Matt White	W112423E
Brushed Nickel	S112423E
Brushed Gold	H112423E
Brushed Rose Gold	R112423E
Crude	K112423E

ZERO

112420

Wall mounted bath/shower mixer with plate, diverter, hand shower and 212 mm spout

Chrome	112420

COMPONENTS

Wall mounted bath shower mixer with diverter - concealed part

Chrome	112320/19C

Finish set including wall mounted 212 mm spout, plate and hand shower kit

Chrome	112420E

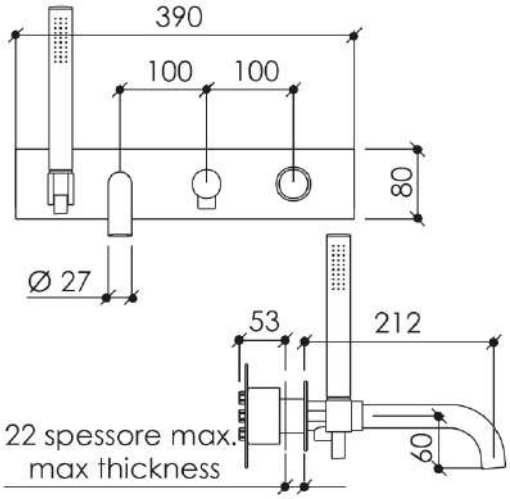

ZERO

112409

Deck mounted bath mixer with 872 mm floor mounted spout

Chrome	112409
Matt Black	B112409
Matt White	W112409
Brushed Nickel	S112409
Brushed Gold	H112409
Brushed Rose Gold	R112409

COMPONENTS

Deck mounted mixer

Chrome	112300/19C
Matt Black	B112300/19C
Matt White	W112300/19C
Brushed Nickel	S112300/19C
Brushed Gold	H112300/19C
Brushed Rose Gold	R112300/19C

Floor mounted 872 mm bath spout

Chrome	112421/29C
Matt Black	B112421/29C
Matt White	W112421/29C
Brushed Nickel	S112421/29C
Brushed Gold	H112421/29C
Brushed Rose Gold	R112421/29C

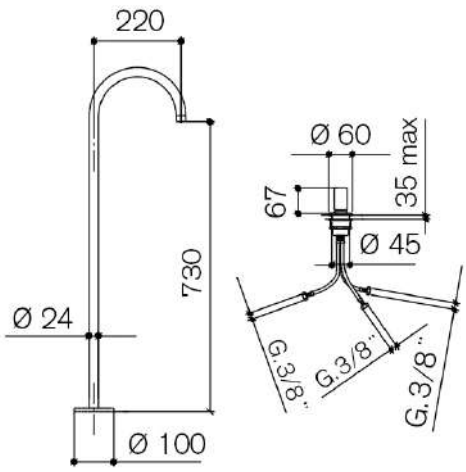

ZERO

112408

Wall mounted bath mixer with 872 mm floor mounted spout

Chrome	112408
Matt Black	B112408
Matt White	W112408
Brushed Nickel	S112408
Brushed Gold	H112408
Brushed Rose Gold	R112408

COMPONENTS

Wall mounted mixer

Chrome	112032/49B
Matt Black	B112032/49B
Matt White	W112032/49B
Brushed Nickel	S112032/49B
Brushed Gold	H112032/49B
Brushed Rose Gold	R112032/49B

Floor mounted 872 mm bath spout

Chrome	112421/29C
Matt Black	B112421/29C
Matt White	W112421/29C
Brushed Nickel	S112421/29C
Brushed Gold	H112421/29C
Brushed Rose Gold	R112421/29C

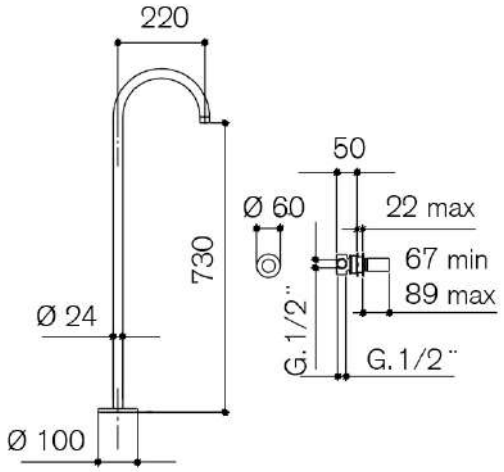

ZERO

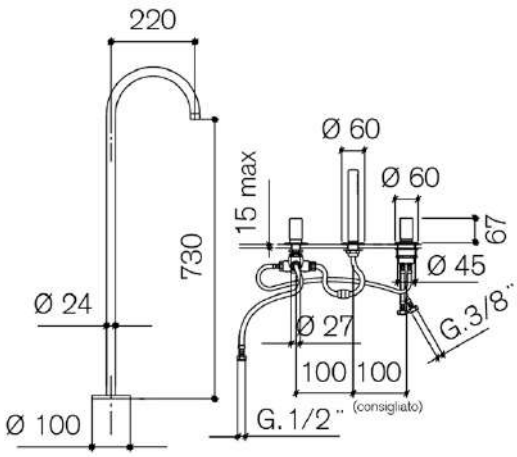

112421

3 hole deck mounted bath/shower mixer with diverter, hand shower and 872 mm floor mounted spout

Chrome	112421
Matt Black	B112421
Matt White	W112421
Brushed Nickel	S112421
Brushed Gold	H112421
Brushed Rose Gold	R112421

COMPONENTS

Deck mounted mixer

Chrome	112300/19C
Matt Black	B112300/19C
Matt White	W112300/19C
Brushed Nickel	S112300/19C
Brushed Gold	H112300/19C
Brushed Rose Gold	R112300/19C

Deck mounted bath 2 way diverter

Chrome	112300/229C
Matt Black	B112300/229C
Matt White	W112300/229C
Brushed Nickel	S112300/229C
Brushed Gold	H112300/229C
Brushed Rose Gold	R112300/229C

Deck mounted hand shower kit

Chrome	112300/189B
Matt Black	B112300/189B
Matt White	W112300/189B
Brushed Nickel	S112300/189B
Brushed Gold	H112300/189B
Brushed Rose Gold	R112300/189B

Floor mounted 872 mm bath spout

Chrome	112421/29C
Matt Black	B112421/29C
Matt White	W112421/29C
Brushed Nickel	S112421/29C
Brushed Gold	H112421/29C
Brushed Rose Gold	R112421/29C

ZERO

113136/F

Deck mounted basin mixer with 1.202 mm floor mounted spout with waste

Chrome	113136/F
Matt Black	B113136/F
Matt White	W113136/F
Brushed Nickel	S113136/F

COMPONENTS

Deck mounted mixer

Chrome	113000/19C
Matt Black	B113000/19C
Matt White	W113000/19C
Brushed Nickel	S113000/19C

Floor mounted 1.202 mm basin spout

Chrome	113106/29C
Matt Black	B113106/29C
Matt White	W113106/29C
Brushed Nickel	S113106/29C

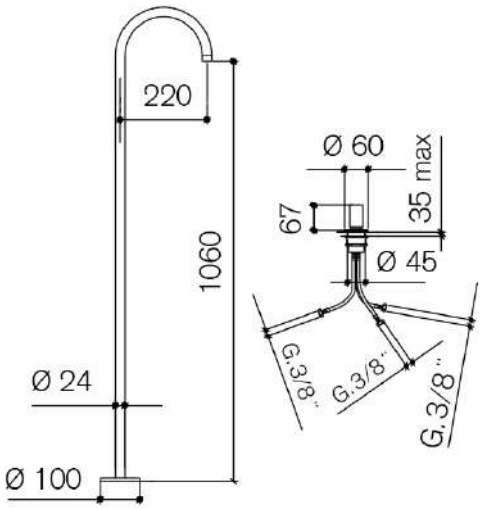

ZERO

113106/F

Wall mounted basin mixer with 1.202 mm floor mounted spout with waste

Chrome	113106/F
Matt Black	B113106/F
Matt White	W113106/F
Brushed Nickel	S113106/F

COMPONENTS

Wall mounted mixer

Chrome	112032/49B
Matt Black	B112032/49B
Matt White	W112032/49B
Brushed Nickel	S112032/49B

Floor mounted 1.202 mm basin spout

Chrome	113106/29C
Matt Black	B113106/29C
Matt White	W113106/29C
Brushed Nickel	S113106/29C

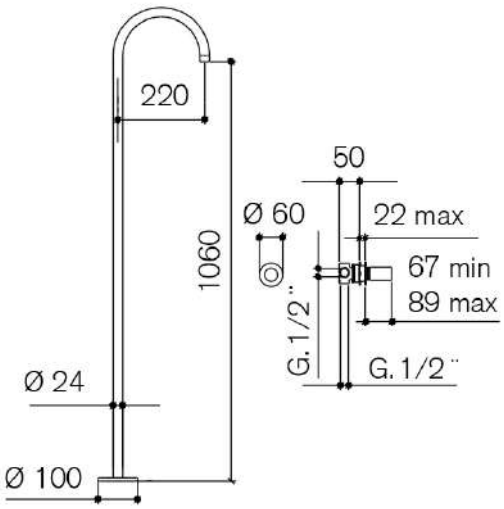

BONNY

BONNY

CONTEMPORANEO**ITALIANO**

BONNY

343000/F

Single lever basin mixer with waste

Chrome	343000/F
Matt White	W343000/F

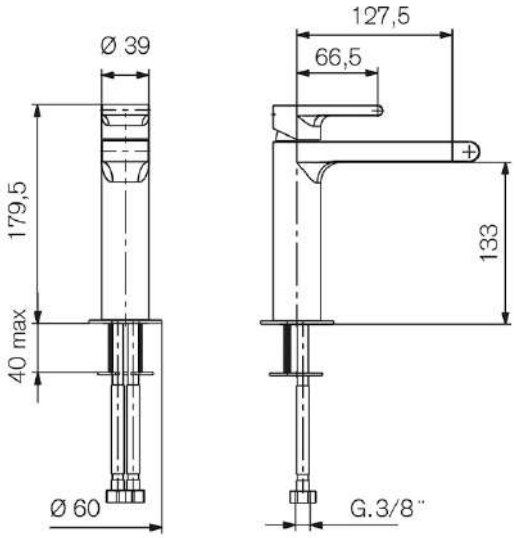

BONNY

343001/F

Tall single lever basin mixer with waste

Chrome	343001/F
Matt White	W343001/F

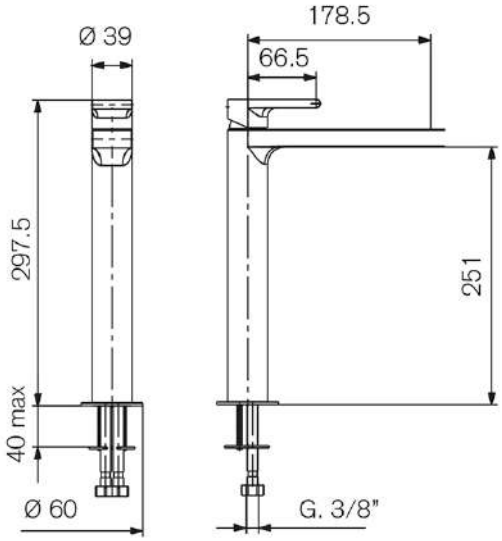

BONNY

344020/F

Single lever bidet mixer with waste

Chrome	344020/F
Matt White	W344020/F

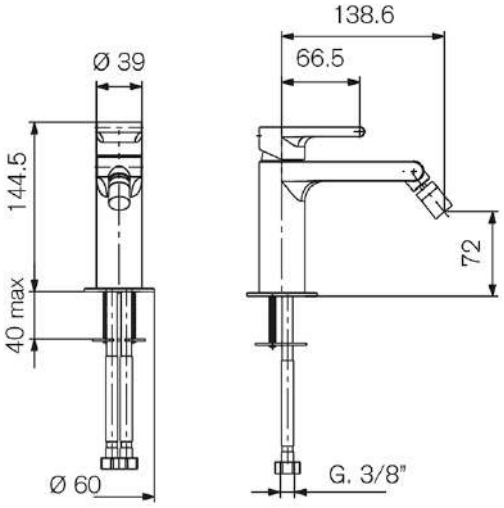

BONNY

343162

Wall mounted basin mixer with plate

Chrome	343162
Matt White	W343162

COMPONENTS

Wall mounted basin mixer - concealed part

Chrome	343162/19C
Matt White	W343162/19C

Finish set including spout and plate

Chrome	343162E
Matt White	W343162E

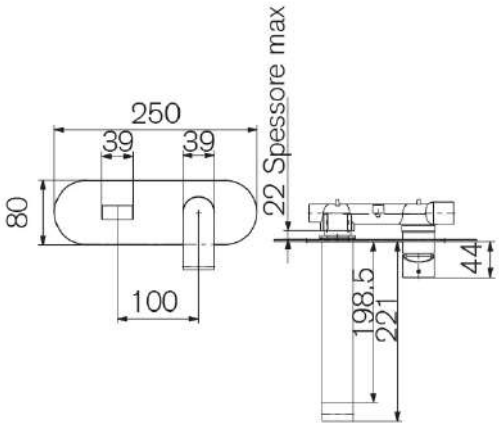

BONNY

342326

Wall mounted manual mixer with plate, diverter and hand shower

Chrome	342326
Matt White	W342326

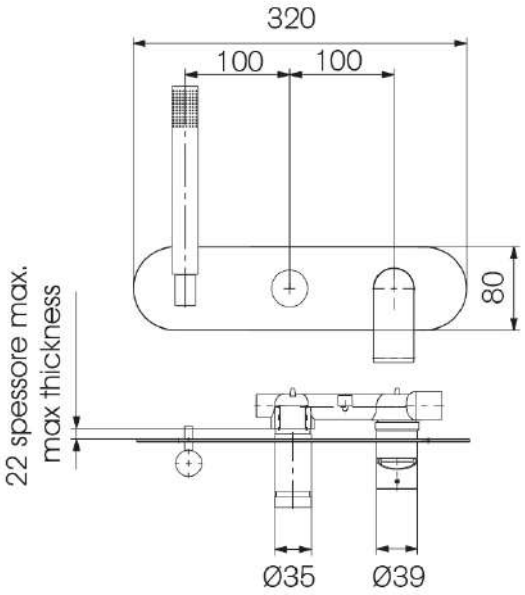

COMPONENTS

Wall mounted mixer with diverter - concealed part

Chrome	342326/19C
Matt White	W342326/19C

Finish set including plate and hand shower kit

Chrome	342326E
Matt White	W342326E

BONNY

342322

Wall mounted manual mixer with diverter and round plate

Chrome	342322
Matt White	W342322

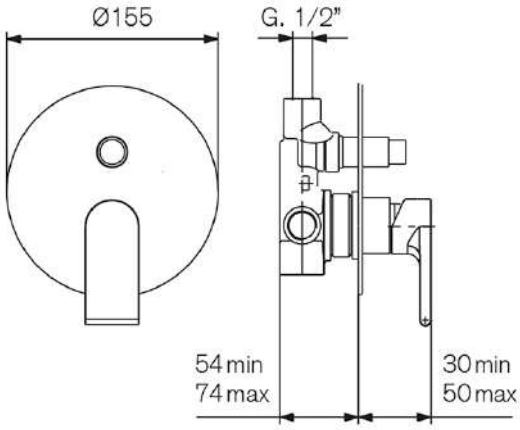

COMPONENTS

Wall mounted shower mixer - concealed part

Chrome	342322/19C
Matt White	W342322/19C

Finish set including round plate

Chrome	302327E
Matt White	W302327E

BONNY

342032/49B

Wall mounted mixer

Chrome	342032/49B
Matt White	W342032/49B

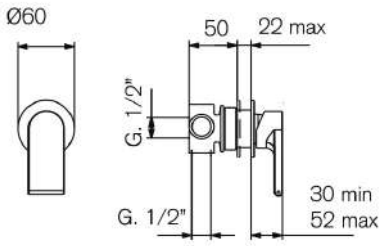

BONNY

342327

Wall mounted manual mixer with diverter and hand shower

Chrome	342327
Matt White	W342327

COMPONENTS

Wall mounted mixer with diverter - concealed part

Chrome	342326/19C
Matt White	W342326/19C

Finish set including flanges and hand shower kit

Chrome	342327E
Matt White	W342327E

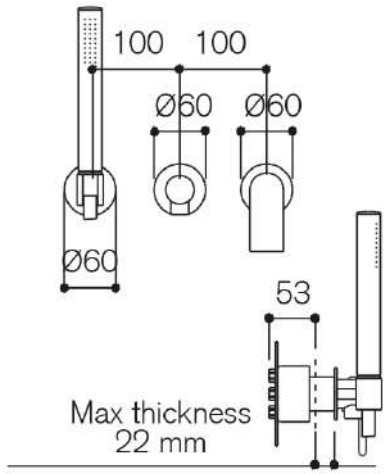

BONNY

342320

Wall mounted bath/shower mixer with plate, diverter and hand shower

Chrome	342320
Matt White	W342320

COMPONENTS

Wall mounted shower/bath mixer - concealed part

Chrome	342320/19C
Matt White	W342320/19C

Finish set including spout, plate and hand shower kit

Chrome	342320E
Matt White	W342320E

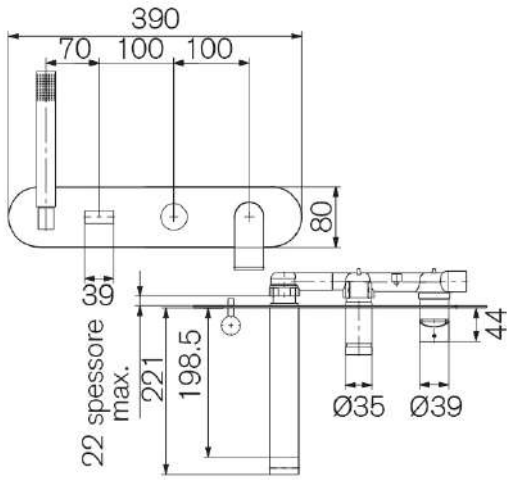

BONNY

152327

Exposed single lever mixer with diverter and hand shower

Chrome	152327
Matt White	W152327

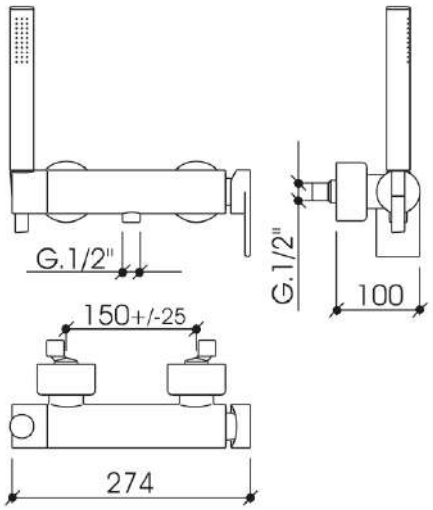

BONNY

152320

Exposed single lever bath mixer with spout, diverter and hand shower

Chrome	152320
Matt White	W152320

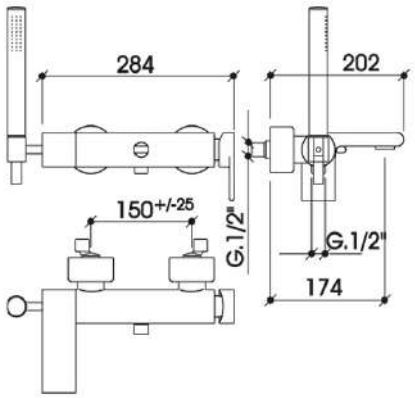

ARCO

ARCO

CONTEMPORANEO**ITALIANO**

ARCO

113010/F

2 hole deck mounted basin mixer with 200 mm spout with waste

Chrome	113010/F
Matt Black	B113010/F
Brushed Nickel	S113010/F
Polished Gold	G113010/F
Crude	K113010/F

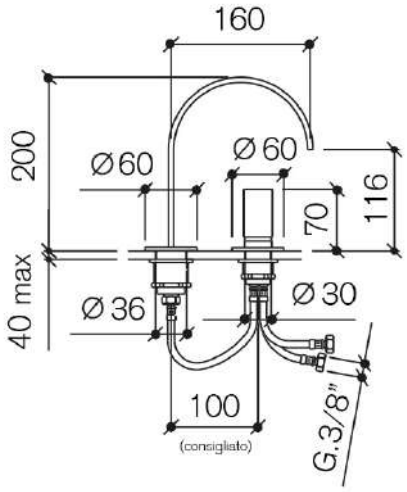

COMPONENTS

Deck mounted mixer

Chrome	113000/19C
Matt Black	B113000/19C
Brushed Nickel	S113000/19C
Polished Gold	G113000/19C
Crude	K113000/19C

Deck mounted 200 mm basin spout

Chrome	113010/29B
Matt Black	B113010/29B
Brushed Nickel	S113010/29B
Polished Gold	G113010/29B
Crude	K113010/29B

ARCO

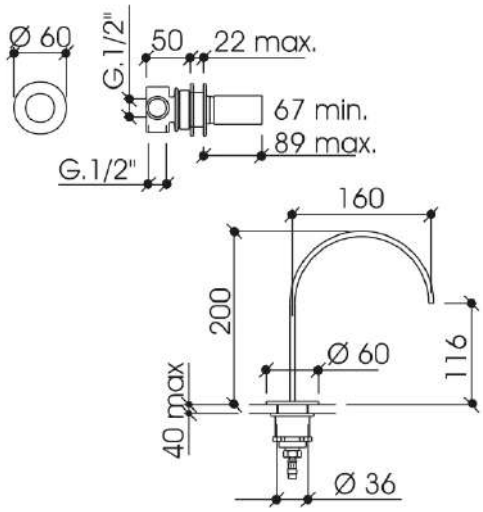

113014/F

Wall mounted basin mixer with 200 mm deck mounted spout with waste

Chrome	113014/F
Matt Black	B113014/F
Brushed Nickel	S113014/F
Polished Gold	G113014/F
Crude	K113014/F

COMPONENTS

Wall mounted mixer

Chrome	112032/49B
Matt Black	B112032/49B
Brushed Nickel	S112032/49B
Polished Gold	G112032/49B
Crude	K112032/49B

Deck mounted 200 mm basin spout

Chrome	113010/29B
Matt Black	B113010/29B
Brushed Nickel	S113010/29B
Polished Gold	G113010/29B
Crude	K113010/29B

ARCO

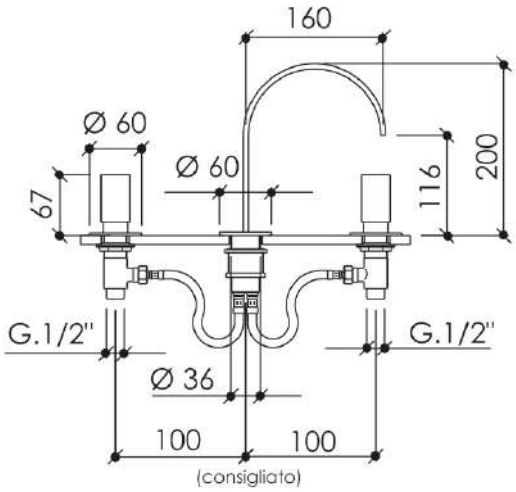

113030/F

3 hole deck mounted basin mixer with 200 mm spout with waste

Chrome	113030/F
Matt Black	B113030/F
Brushed Nickel	S113030/F
Polished Gold	G113030/F
Crude	K113030/F

COMPONENTS

Pair of deck mounted valves

Chrome	113020/79B
Matt Black	B113020/79B
Brushed Nickel	S113020/79B
Polished Gold	G113020/79B
Crude	K113020/79B

3 hole deck mounted 200 mm basin spout

Chrome	113030/29B
Matt Black	B113030/29B
Brushed Nickel	S113030/29B
Polished Gold	G113030/29B
Crude	K113030/29B

ARCO

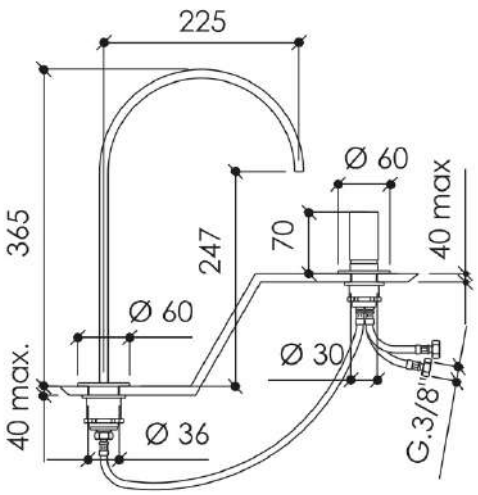

113011/F

2 hole deck mounted basin mixer with 365 mm spout with waste

Chrome	113011/F
Matt Black	B113011/F
Brushed Nickel	S113011/F
Polished Gold	G113011/F
Crude	K113011/F

COMPONENTS

Deck mounted mixer

Chrome	113000/19C
Matt Black	B113000/19C
Brushed Nickel	S113000/19C
Polished Gold	G113000/19C
Crude	K113000/19C

Deck mounted 365 mm basin spout

Chrome	113011/29B
Matt Black	B113011/29B
Brushed Nickel	S113011/29B
Polished Gold	G113011/29B
Crude	K113011/29B

ARCO

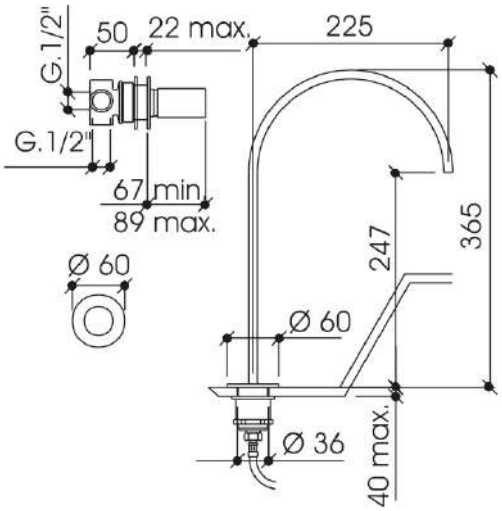

113052/F

Wall mounted basin mixer with 365 mm deck mounted spout with waste

Chrome	113052/F
Matt Black	B113052/F
Brushed Nickel	S113052/F
Polished Gold	G113052/F
Crude	K113052/F

COMPONENTS

Wall mounted mixer

Chrome	112032/49B
Matt Black	B112032/49B
Brushed Nickel	S112032/49B
Polished Gold	G112032/49B
Crude	K112032/49B

Deck mounted 365 mm basin spout

Chrome	113011/29B
Matt Black	B113011/29B
Brushed Nickel	S113011/29B
Polished Gold	G113011/29B
Crude	K113011/29B

ARCO

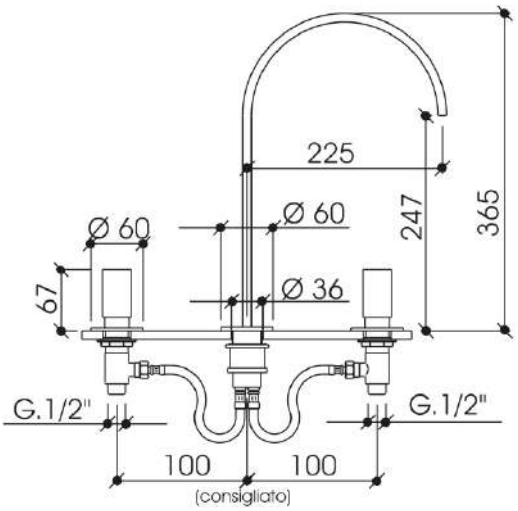

113053/F

3 hole deck mounted basin mixer with 365 mm spout with waste

Chrome	113053/F
Matt Black	B113053/F
Brushed Nickel	S113053/F
Polished Gold	G113053/F
Crude	K113053/F

COMPONENTS

Pair of deck mounted valves

Chrome	113020/79B
Matt Black	B113020/79B
Brushed Nickel	S113020/79B
Polished Gold	G113020/79B
Crude	K113020/79B

3 hole deck mounted 365 mm basin spout

Chrome	113053/29B
Matt Black	B113053/29B
Brushed Nickel	S113053/29B
Polished Gold	G113053/29B
Crude	K113053/29B

ARCO

113015/F

Single lever basin mixer with waste

Chrome	113015/F
Matt Black	B113015/F
Brushed Nickel	S113015/F
Polished Gold	G113015/F

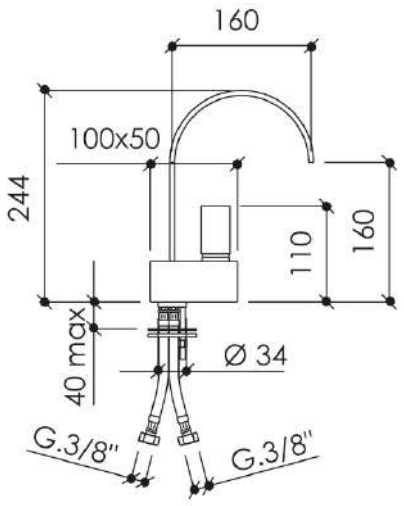

ARCO

113017

Wall mounted basin/sink mixer with sliding spout

Chrome	113017
Matt Black	B113017
Brushed Nickel	S113017

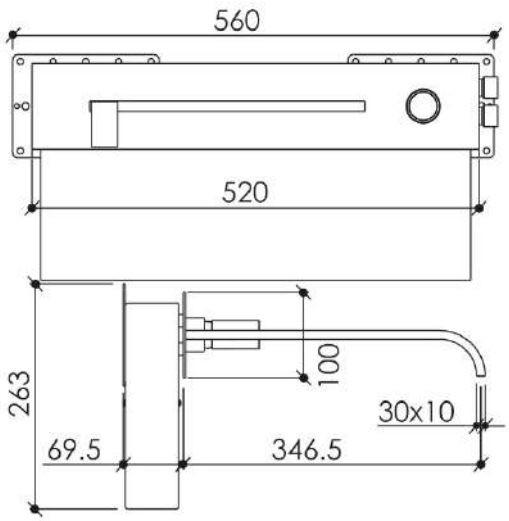

ARCO

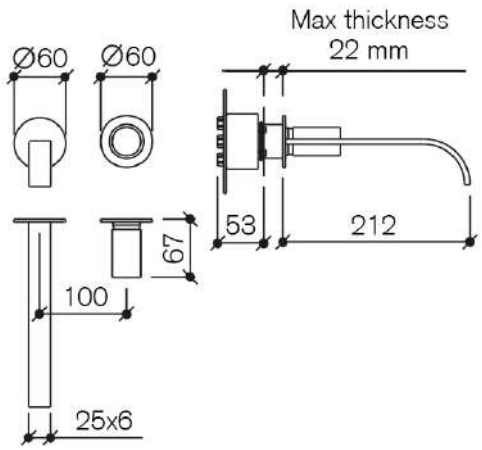

113012

Wall mounted basin mixer with 212 mm spout

Chrome	113012
Matt Black	B113012
Brushed Nickel	S113012
Polished Gold	G113012
Crude	K113012

COMPONENTS

Wall mounted basin mixer - concealed part

Chrome	113003/19C
Matt Black	B113003/19C
Brushed Nickel	S113003/19C
Polished Gold	G113003/19C
Crude	K113003/19C

Finish set including 212 mm spout and flanges

Chrome	113012E
Matt Black	B113012E
Brushed Nickel	S113012E
Polished Gold	G113012E
Crude	K113012E

ARCO

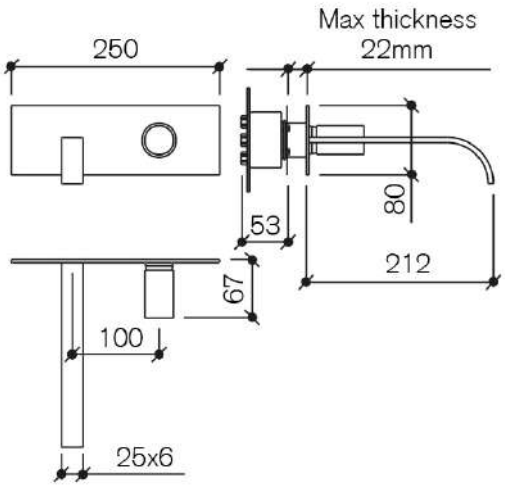

113013

Wall mounted basin mixer with 212 mm spout and plate

Chrome	113013
Matt Black	B113013
Brushed Nickel	S113013
Polished Gold	G113013

COMPONENTS

Wall mounted basin mixer - concealed part

Chrome	113003/19C
Matt Black	B113003/19C
Brushed Nickel	S113003/19C
Polished Gold	G113003/19C

Finish set including 212 mm spout and plate

Chrome	113013E
Matt Black	B113013E
Brushed Nickel	S113013E
Polished Gold	G113013E

ARCO

113018

Wall mounted basin mixer with 150 mm spout

Chrome	113018
Matt Black	B113018
Brushed Nickel	S113018
Polished Gold	G113018
Crude	K113018

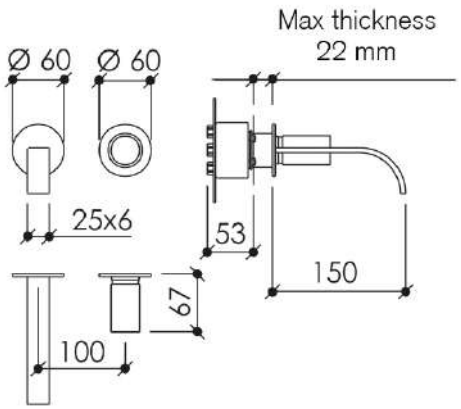

COMPONENTS

Wall mounted basin mixer - concealed part

Chrome	113003/19C
Matt Black	B113003/19C
Brushed Nickel	S113003/19C
Polished Gold	G113003/19C
Crude	K113003/19C

Finish set including 150 mm spout and flanges

Chrome	113018E
Matt Black	B113018E
Brushed Nickel	S113018E
Polished Gold	G113018E
Crude	K113018E

ARCO

113019

Wall mounted basin mixer with 150 mm spout and plate

Chrome	113019
Matt Black	B113019
Brushed Nickel	S113019
Polished Gold	G113019

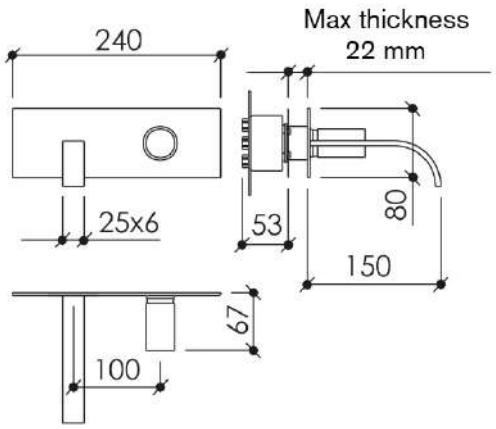

COMPONENTS

Wall mounted basin mixer - concealed part

Chrome	113003/19C
Matt Black	B113003/19C
Brushed Nickel	S113003/19C
Polished Gold	G113003/19C

Finish set including 150 mm spout and plate

Chrome	113019E
Matt Black	B113019E
Brushed Nickel	S113019E
Polished Gold	G113019E

ARCO

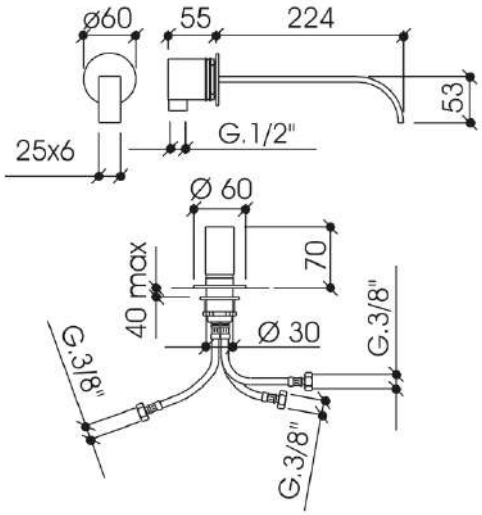

113050

Deck mounted basin mixer with 212 mm wall mounted spout

Chrome	113050
Matt Black	B113050
Brushed Nickel	S113050
Polished Gold	G113050
Crude	K113050

COMPONENTS

Deck mounted mixer

Chrome	113000/19C
Matt Black	B113000/19C
Brushed Nickel	S113000/19C
Polished Gold	G113000/19C
Crude	K113000/19C

Wall mounted 212 mm basin spout

Chrome	113031
Matt Black	B113031
Brushed Nickel	S113031
Polished Gold	G113031
Crude	K113031

ARCO

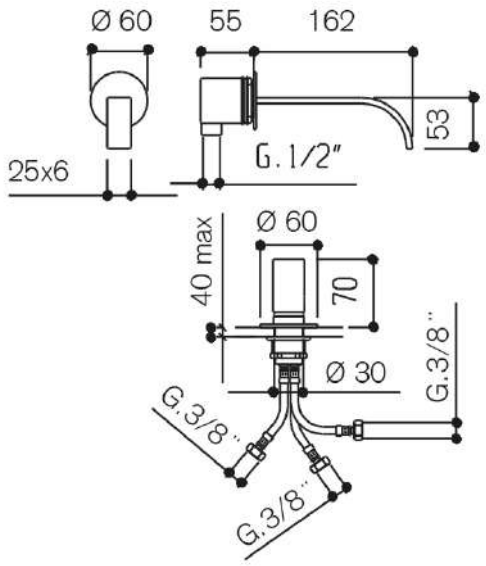

113051

Deck mounted basin mixer with 150 mm wall mounted spout

Chrome	113051
Matt Black	B113051
Brushed Nickel	S113051
Polished Gold	G113051
Crude	K113051

COMPONENTS

Deck mounted mixer

Chrome	113000/19C
Matt Black	B113000/19C
Brushed Nickel	S113000/19C
Polished Gold	G113000/19C
Crude	K113000/19C

Wall mounted 150 mm basin spout

Chrome	113032
Matt Black	B113032
Brushed Nickel	S113032
Polished Gold	G113032
Crude	K113032

ARCO

114030/F

2 hole deck mounted bidet mixer with 97 mm spout with waste

Chrome	114030/F
Matt Black	B114030/F
Brushed Nickel	S114030/F
Polished Gold	G114030/F
Crude	K114030/F

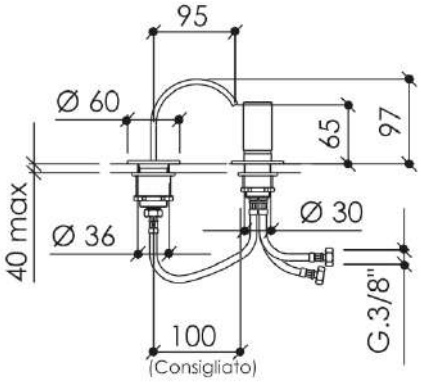

COMPONENTS

Deck mounted mixer

Chrome	113000/19C
Matt Black	B113000/19C
Brushed Nickel	S113000/19C
Polished Gold	G113000/19C
Crude	K113000/19C

Deck mounted 97 mm basin/bidet spout

Chrome	114030/29B
Matt Black	B114030/29B
Brushed Nickel	S114030/29B
Polished Gold	G114030/29B
Crude	K114030/29B

ARCO

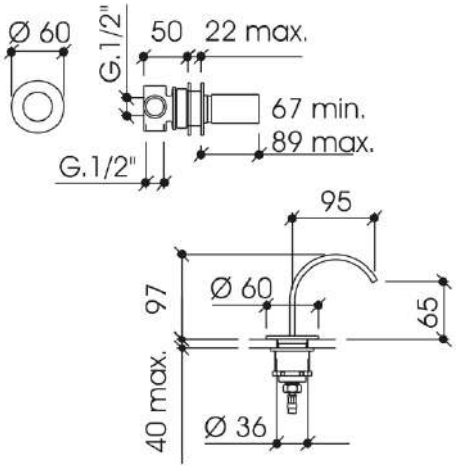

114031/F

Wall mounted bidet mixer with 97 mm deck mounted spout with waste

Chrome	114031/F
Matt Black	B114031/F
Brushed Nickel	S114031/F
Polished Gold	G114031/F
Crude	K114031/F

COMPONENTS

Wall mounted mixer

Chrome	112032/49B
Matt Black	B112032/49B
Brushed Nickel	S112032/49B
Polished Gold	G112032/49B
Crude	K112032/49B

Deck mounted 97 mm basin/bidet spout

Chrome	114030/29B
Matt Black	B114030/29B
Brushed Nickel	S114030/29B
Polished Gold	G114030/29B
Crude	K114030/29B

ARCO

114033/F

3 hole deck mounted bidet mixer with 97 mm spout with waste

Chrome	114033/F
Matt Black	B114033/F
Brushed Nickel	S114033/F
Polished Gold	G114033/F
Crude	K114033/F

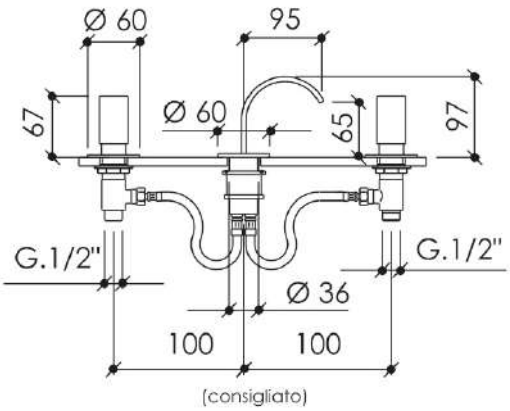

COMPONENTS

Pair of deck mounted valves

Chrome	113020/79B
Matt Black	B113020/79B
Brushed Nickel	S113020/79B
Polished Gold	G113020/79B
Crude	K113020/79B

3 hole deck mounted 97 mm basin/bidet spout

Chrome	114033/29B
Matt Black	B114033/29B
Brushed Nickel	S114033/29B
Polished Gold	G114033/29B
Crude	K114033/29B

ARCO

114032/F

Single lever bidet mixer with waste

Chrome	114032/F
Matt Black	B114032/F
Brushed Nickel	S114032/F
Polished Gold	G114032/F

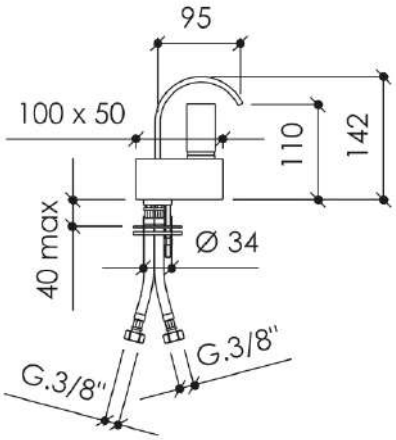

ARCO

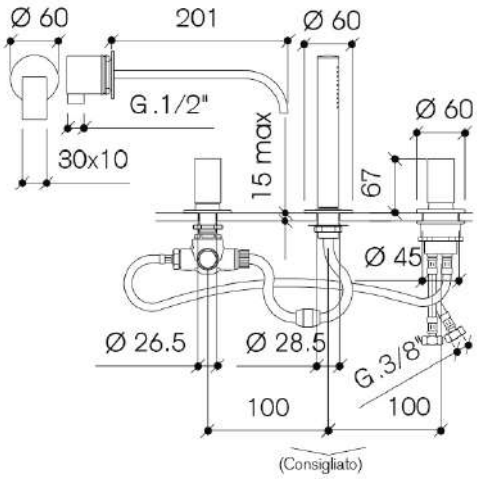

112315

3 hole deck mounted bath/shower mixer with diverter, hand shower and 201 mm wall mounted spout

Chrome	112315
Matt Black	B112315
Brushed Nickel	S112315
Polished Gold	G112315
Crude	K112315

COMPONENTS

Deck mounted mixer

Chrome	112300/19C
Matt Black	B112300/19C
Brushed Nickel	S112300/19C
Polished Gold	G112300/19C
Crude	K112300/19C

Deck mounted bath 2 way diverter

Chrome	112300/229C
Matt Black	B112300/229C
Brushed Nickel	S112300/229C
Polished Gold	G112300/229C
Crude	K112300/229C

Deck mounted hand shower kit

Chrome	112300/189B
Matt Black	B112300/189B
Brushed Nickel	S112300/189B
Polished Gold	G112300/189B
Crude	K112300/189B

Wall mounted 201 mm bath spout

Chrome	112034/19B
Matt Black	B112034/19B
Brushed Nickel	S112034/19B
Polished Gold	G112034/19B
Crude	K112034/19B

ARCO

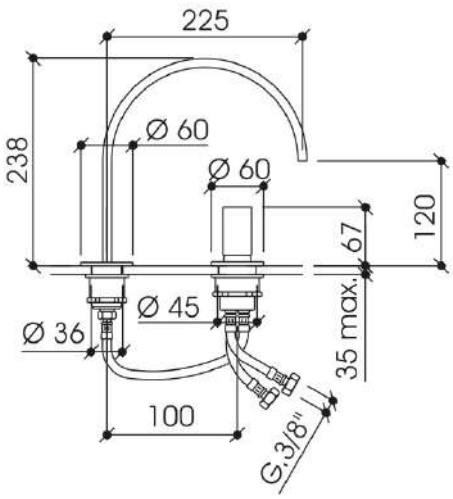

112317

2 hole deck mounted bath mixer with 238 mm spout

Chrome	112317
Matt Black	B112317
Brushed Nickel	S112317
Polished Gold	G112317
Crude	K112317

COMPONENTS

Deck mounted mixer

Chrome	112300/19C
Matt Black	B112300/19C
Brushed Nickel	S112300/19C
Polished Gold	G112300/19C
Crude	K112300/19C

Deck mounted 238 mm bath spout

Chrome	112310/29B
Matt Black	B112310/29B
Brushed Nickel	S112310/29B
Polished Gold	G112310/29B
Crude	K112310/29B

ARCO

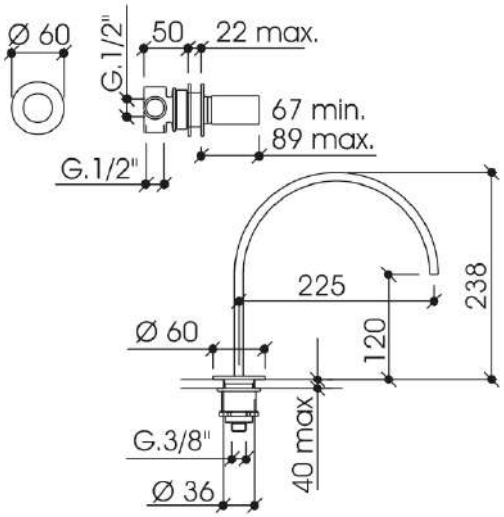

112316

Wall mounted bath mixer with 238 mm deck mounted spout

Chrome	112316
Matt Black	B112316
Brushed Nickel	S112316
Polished Gold	G112316
Crude	K112316

COMPONENTS

Wall mounted mixer

Chrome	112032/49B
Matt Black	B112032/49B
Brushed Nickel	S112032/49B
Polished Gold	G112032/49B
Crude	K112032/49B

Deck mounted 238 mm bath spout

Chrome	112310/29B
Matt Black	B112310/29B
Brushed Nickel	S112310/29B
Polished Gold	G112310/29B
Crude	K112310/29B

ARCO

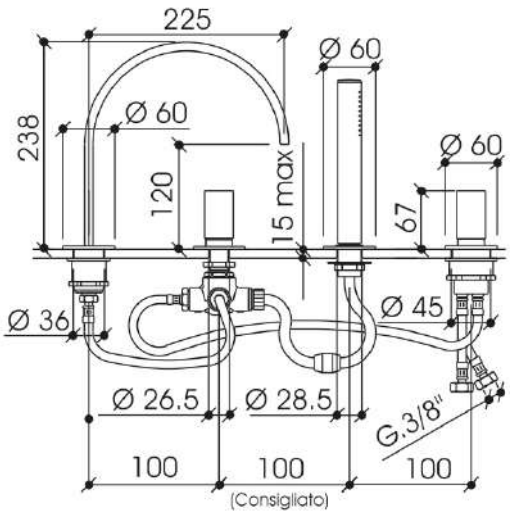

112310

4 hole deck mounted bath/shower mixer with diverter, hand shower and 238 mm spout

Chrome	112310
Matt Black	B112310
Brushed Nickel	S112310
Polished Gold	G112310
Crude	K112310

COMPONENTS

Deck mounted mixer

Chrome	112300/19C
Matt Black	B112300/19C
Brushed Nickel	S112300/19C
Polished Gold	G112300/19C
Crude	K112300/19C

Deck mounted bath 2 way diverter

Chrome	112300/229C
Matt Black	B112300/229C
Brushed Nickel	S112300/229C
Polished Gold	G112300/229C
Crude	K112300/229C

Deck mounted hand shower kit

Chrome	112300/189B
Matt Black	B112300/189B
Brushed Nickel	S112300/189B
Polished Gold	G112300/189B
Crude	K112300/189B

Deck mounted 238 mm bath spout

Chrome	112310/29B
Matt Black	B112310/29B
Brushed Nickel	S112310/29B
Polished Gold	G112310/29B
Crude	K112310/29B

ARCO

112054

Wall mounted bath mixer with 201 mm spout

Chrome	112054
Matt Black	B112054
Brushed Nickel	S112054
Polished Gold	G112054
Crude	K112054

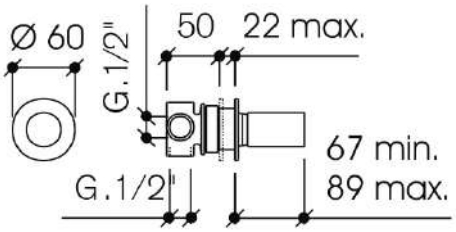

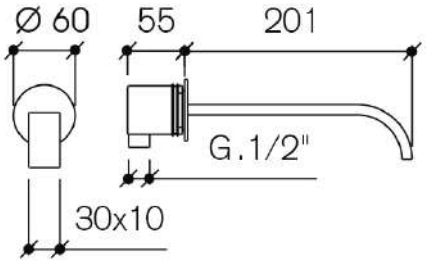

COMPONENTS

Wall mounted mixer

Chrome	112032/49B
Matt Black	B112032/49B
Brushed Nickel	S112032/49B
Polished Gold	G112032/49B
Crude	K112032/49B

Wall mounted 201 mm bath spout

Chrome	112034/19B
Matt Black	B112034/19B
Brushed Nickel	S112034/19B
Polished Gold	G112034/19B
Crude	K112034/19B

ARCO

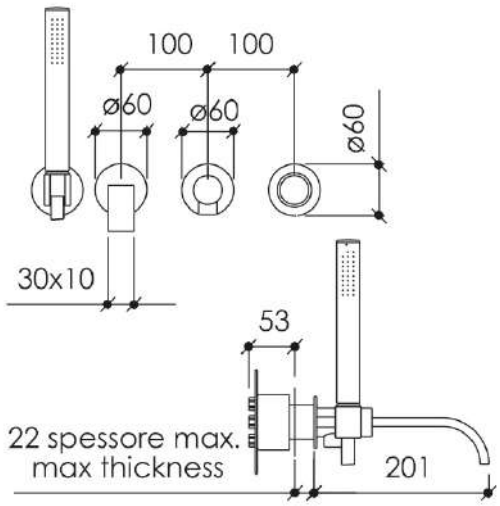

112333

Wall mounted bath/shower mixer with diverter, hand shower and 201 mm spout

Chrome	112333
Matt Black	B112333
Brushed Nickel	S112333
Polished Gold	G112333
Crude	K112333

COMPONENTS

Wall mounted bath shower mixer with diverter - concealed part

Chrome	112320/19C
Matt Black	B112320/19C
Brushed Nickel	S112320/19C
Polished Gold	G112320/19C
Crude	K112320/19C

Finish set including 201 mm spout, flanges and hand shower kit

Chrome	112333E
Matt Black	B112333E
Brushed Nickel	S112333E
Polished Gold	G112333E
Crude	K112333E

ARCO

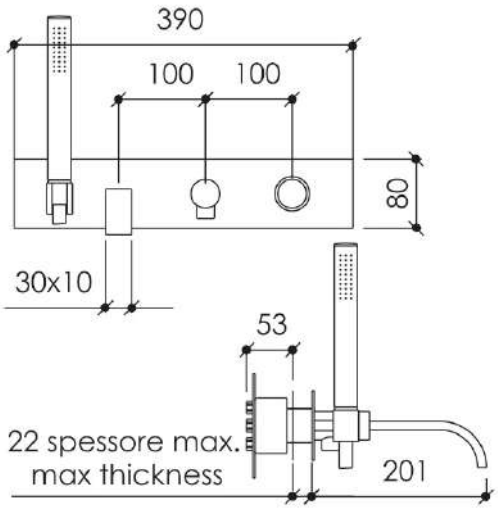

112330

Wall mounted bath/shower mixer with plate, diverter, hand shower and 201 mm spout

Chrome	112330
Matt Black	B112330
Brushed Nickel	S112330
Polished Gold	G112330

COMPONENTS

Wall mounted bath shower mixer with diverter - concealed part

Chrome	112320/19C
Matt Black	B112320/19C
Brushed Nickel	S112320/19C
Polished Gold	G112320/19C

Finish set including 201 mm spout, plate and hand shower kit

Chrome	112330E
Matt Black	B112330E
Brushed Nickel	S112330E
Polished Gold	G112330E

ARCO

112042/19C

330 mm wall mounted spout

Chrome	112042/19C
Matt Black	B112042/19C
Brushed Nickel	S112042/19C
Polished Gold	G112042/19C

COMPONENTS

Concealed shower outlet

Chrome	112032/59A

Shower head + arm finish set

Chrome	112042/19B
Matt Black	B112042/19B
Brushed Nickel	S112042/19B
Polished Gold	G112042/19B

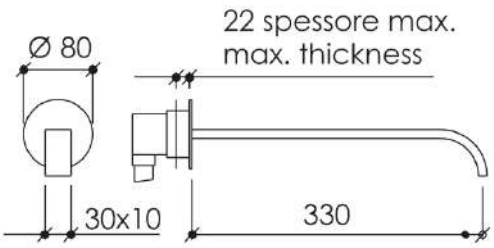

ARCO

113036/F

Deck mounted basin mixer with 1.182 mm floor mounted spout with waste

Chrome	113036/F
Matt Black	B113036/F
Brushed Nickel	S113036/F
Polished Gold	G113036/F
Crude	K113036/F

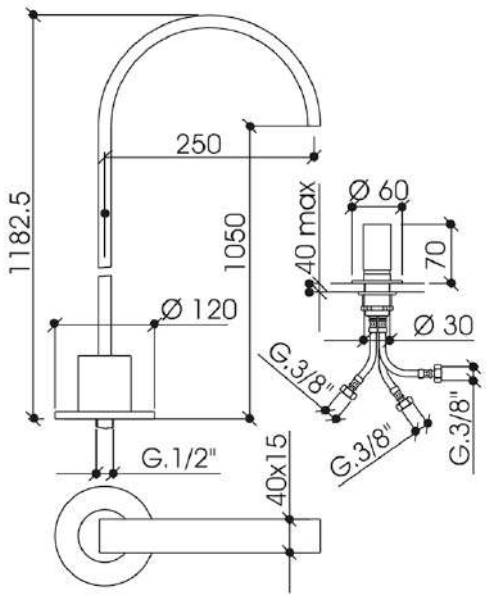

COMPONENTS

Deck mounted mixer

Chrome	113000/19C
Matt Black	B113000/19C
Brushed Nickel	S113000/19C
Polished Gold	G113000/19C
Crude	K113000/19C

Floor mounted 1.182 mm basin spout

Chrome	113016/29C
Matt Black	B113016/29C
Brushed Nickel	S113016/29C
Polished Gold	G113016/29C
Crude	K113016/29C

ARCO

113016/F

Wall mounted basin mixer with 1.182 mm floor mounted spout with waste

Chrome	113016/F
Matt Black	B113016/F
Brushed Nickel	S113016/F
Polished Gold	G113016/F
Crude	K113016/F

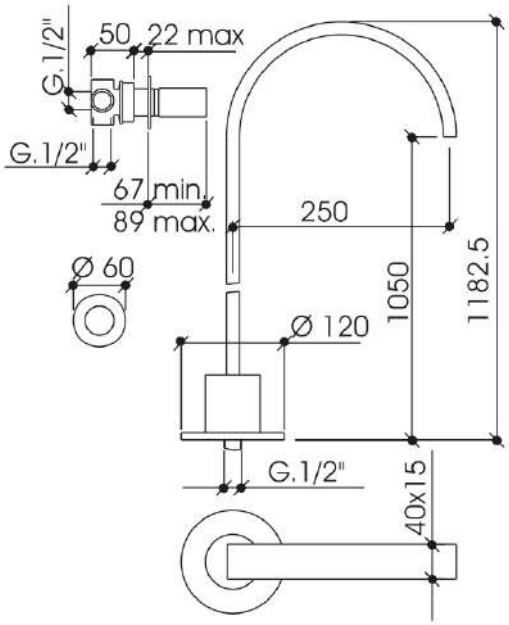

COMPONENTS

Wall mounted mixer

Chrome	112032/49B
Matt Black	B112032/49B
Brushed Nickel	S112032/49B
Polished Gold	G112032/49B
Crude	K112032/49B

Floor mounted 1.182 mm basin spout

Chrome	113016/29C
Matt Black	B113016/29C
Brushed Nickel	S113016/29C
Polished Gold	G113016/29C
Crude	K113016/29C

ARCO

112319

Deck mounted bath mixer with 852 mm floor mounted spout

Chrome	112319
Matt Black	B112319
Brushed Nickel	S112319
Polished Gold	G112319
Crude	K112319

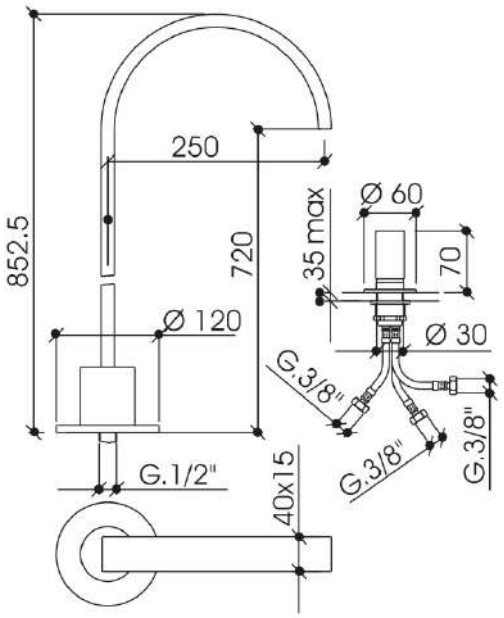

COMPONENTS

Deck mounted mixer

Chrome	112300/19C
Matt Black	B112300/19C
Brushed Nickel	S112300/19C
Polished Gold	G112300/19C
Crude	K112300/19C

Floor mounted 852 mm bath spout

Chrome	112331/29C
Matt Black	B112331/29C
Brushed Nickel	S112331/29C
Polished Gold	G112331/29C
Crude	K112331/29C

ARCO

112318

Wall mounted bath mixer with 852 mm floor mounted spout

Chrome	112318
Matt Black	B112318
Brushed Nickel	S112318
Polished Gold	G112318
Crude	K112318

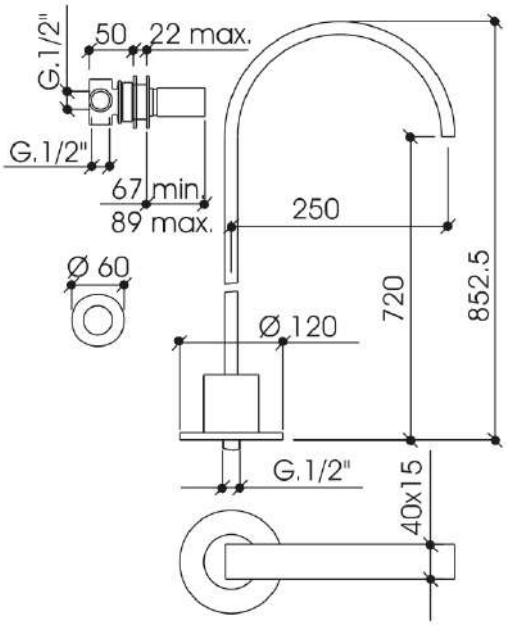

COMPONENTS

Wall mounted mixer

Chrome	112032/49B
Matt Black	B112032/49B
Brushed Nickel	S112032/49B
Polished Gold	G112032/49B
Crude	K112032/49B

Floor mounted 852 mm bath spout

Chrome	112331/29C
Matt Black	B112331/29C
Brushed Nickel	S112331/29C
Polished Gold	G112331/29C
Crude	K112331/29C

ARCO

112331

3 hole deck mounted bath/shower mixer with diverter, hand shower and 852 mm floor mounted spout

Chrome	112331
Matt Black	B112331
Brushed Nickel	S112331
Polished Gold	G112331
Crude	K112331

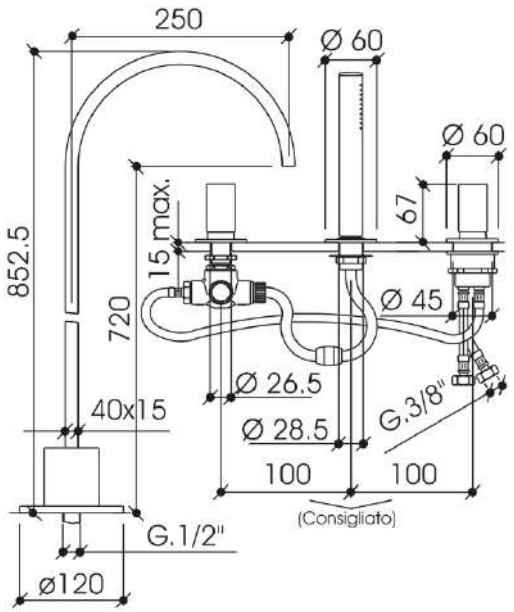

COMPONENTS

Deck mounted mixer

Chrome	112300/19C
Matt Black	B112300/19C
Brushed Nickel	S112300/19C
Polished Gold	G112300/19C
Crude	K112300/19C

Deck mounted bath 2 way diverter

Chrome	112300/229C
Matt Black	B112300/229C
Brushed Nickel	S112300/229C
Polished Gold	G112300/229C
Crude	K112300/229C

Deck mounted hand shower kit

Chrome	112300/189B
Matt Black	B112300/189B
Brushed Nickel	S112300/189B
Polished Gold	G112300/189B
Crude	K112300/189B

Floor mounted 852 mm bath spout

Chrome	112331/29C
Matt Black	B112331/29C
Brushed Nickel	S112331/29C
Polished Gold	G112331/29C
Crude	K112331/29C

ARCO

112311

Floor mounted bath column with diverter, hand shower and 946 mm spout

Chrome	112311

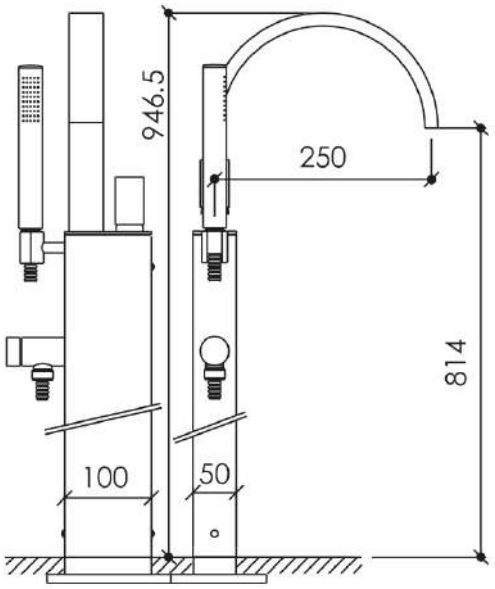

COMPONENTS

Concealed floor mounted support

Chrome	112311/169A

Finish set for bath column

Chrome	112311E

ARCO

112332/29B

Floor mounted shower column

Chrome 112332/29B

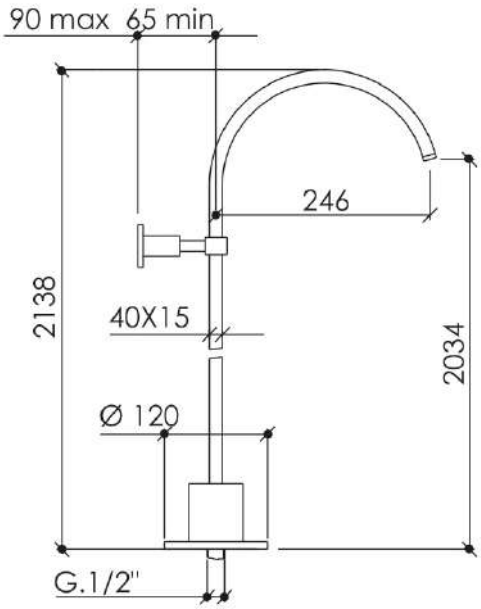

ARCO

112312

Floor mounted shower column with diverter and hand shower

Chrome	112312

COMPONENTS

Concealed floor mounted support

Chrome	112311/169A

Tall shower column - finish set

Chrome	112312E

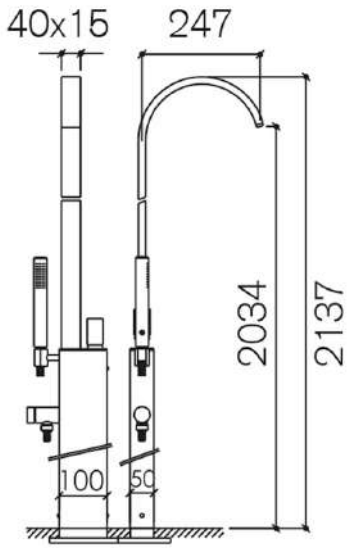

JUST

CONTEMPORANEO**ITALIANO**

JUST

333000/F

Single lever basin mixer ø 18.5 mm spout with waste

Chrome 333000/F

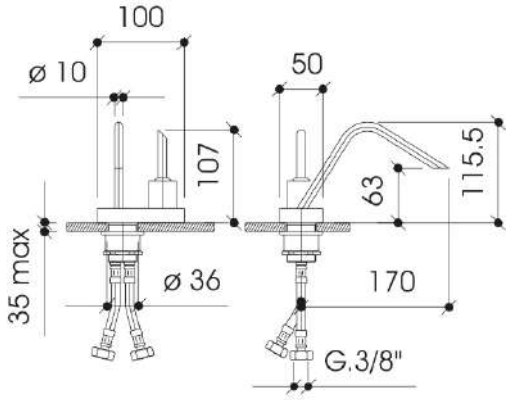

JUST

333002

Wall mounted basin mixer ø 18.5 mm spout

Chrome 333002

COMPONENTS

Wall mounted basin mixer - concealed part

Chrome 333002/19C

Finish set including ø 18.5 mm spout and flanges

Chrome 333002E

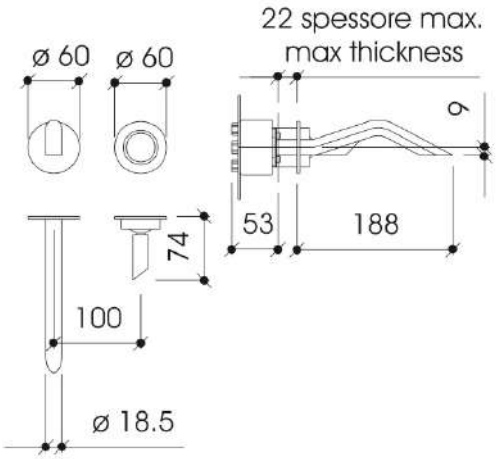

JUST

334020/F

Single lever bidet/cloakroom basin mixer ø 18.5 mm spout with waste

Chrome 334020/F

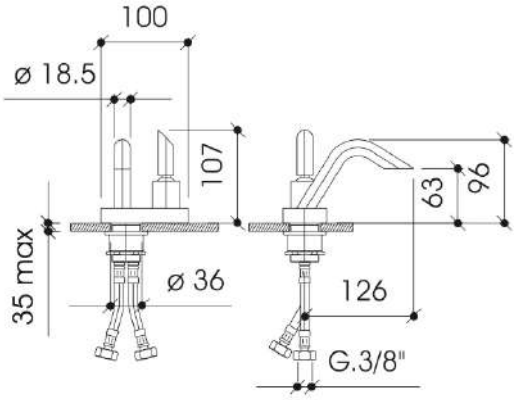

JUST

333001/F

Single lever basin mixer ø 10 mm spout with waste

Chrome 333001/F

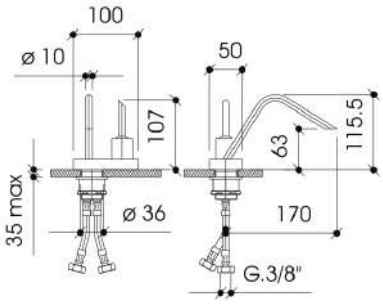

JUST

333003

Wall mounted basin mixer ø 10 mm spout

Chrome	333003

COMPONENTS

Wall mounted basin mixer - concealed part

Chrome	333003/19C

Finish set including ø 10 mm spout and flanges

Chrome	333003E

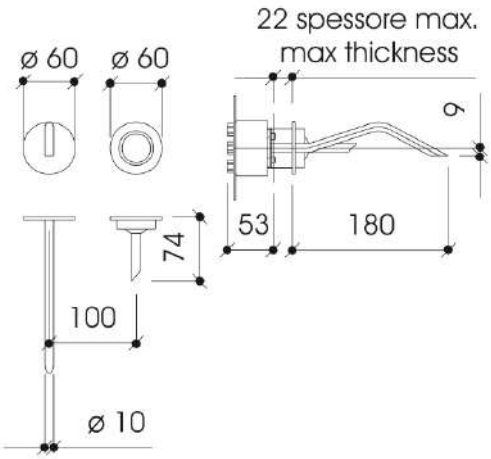

JUST

334021/F

Single lever bidet/cloakroom basin mixer ø 10 mm spout with waste

Chrome 334021/F

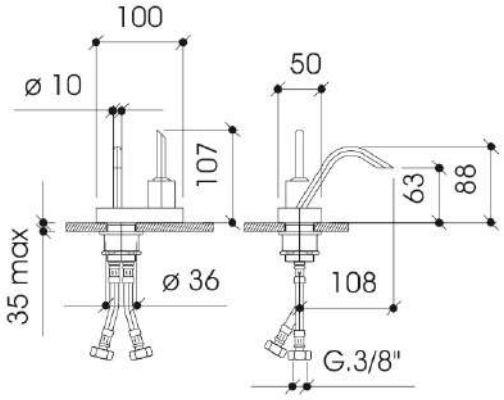

JUST

332320

Wall mounted bath/shower mixer with diverter, hand shower and Ø 18.5 mm handle

Chrome 332320

COMPONENTS

Wall mounted bath mixer - concealed part ø 18,5 mm handle

Chrome 332320/19C

Finish set including spout, flanges and hand shower kit

Chrome 332320E

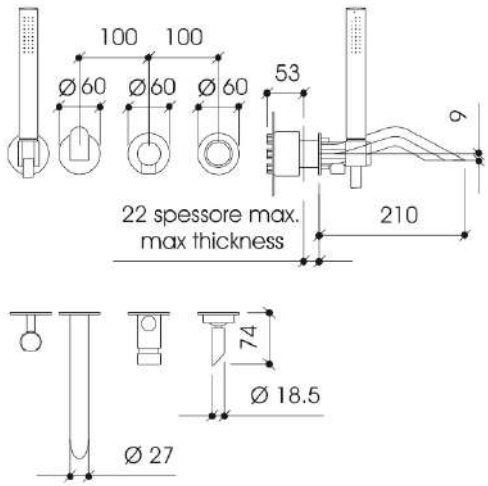

JUST

332321

Wall mounted bath/shower mixer with diverter, hand shower and Ø 10 mm handle

Chrome 332321

COMPONENTS

Wall mounted bath mixer - concealed part ø 10 mm handle

Chrome 332321/19C

Finish set including spout, flanges and hand shower kit

Chrome 332321E

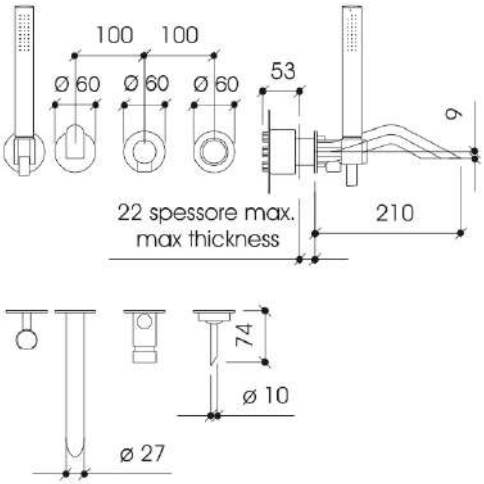

JUST

332032

Wall mounted mixer with ø 18.5 mm handle

Chrome 332032

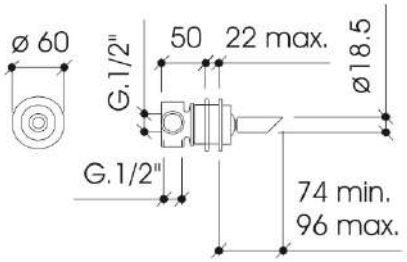

JUST

332324

Wall mounted manual mixer with diverter, round plate and ø 18.5 mm handle

Chrome 332324

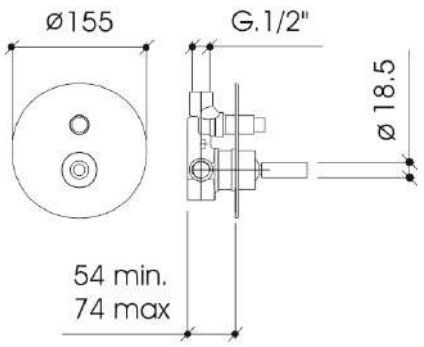

JUST

332322

Wall mounted manual mixer with diverter, rectangular plate and ø 18.5 mm handle

Chrome 332322

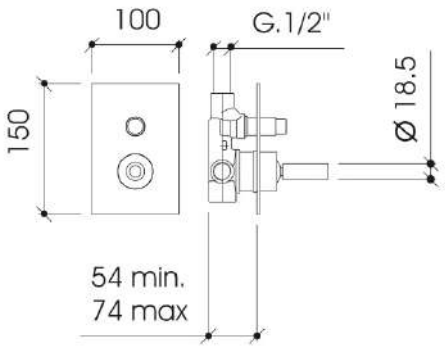

JUST

332500

Wall mounted manual mixer with diverter and ø 18.5 mm handle shower

Chrome 332500

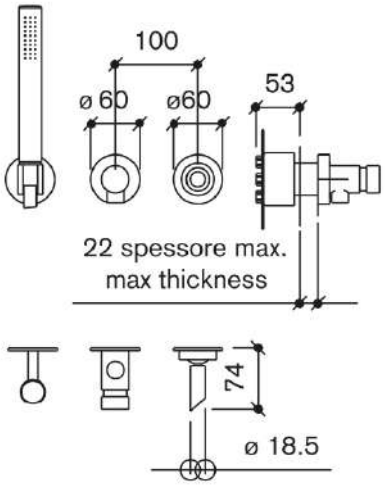

JUST

332033

Wall mounted mixer with ø 10 mm handle

Chrome 332033

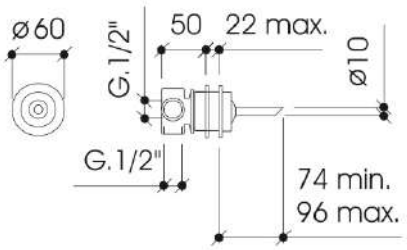

JUST

332325

Wall mounted manual mixer with diverter, round plate and ø 10 mm handle

Chrome 332325

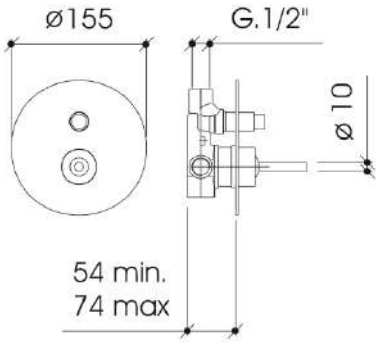

JUST

332323

Wall mounted manual mixer with diverter, rectangular plate and ø 10 mm handle

Chrome 332323

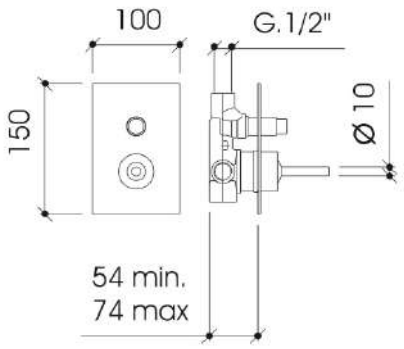

JUST

332501

Wall mounted manual mixer with diverter and ø 10 mm handle shower

Chrome 332501

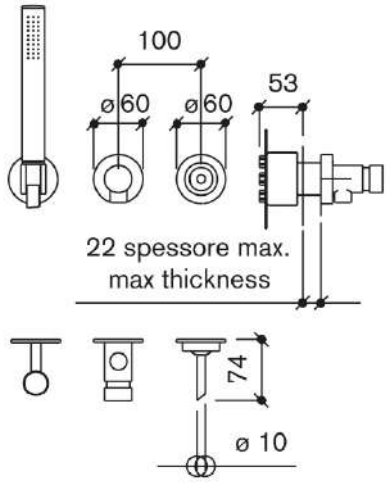

ELLE

CONTEMPORANEO**ITALIANO**

ELLE

113000/F

2 hole deck mounted basin mixer with 112 mm spout with waste

Chrome	113000/F

COMPONENTS

Deck mounted mixer

Chrome	113000/19C

Deck mounted 112 mm basin spout

Chrome	113000/29B

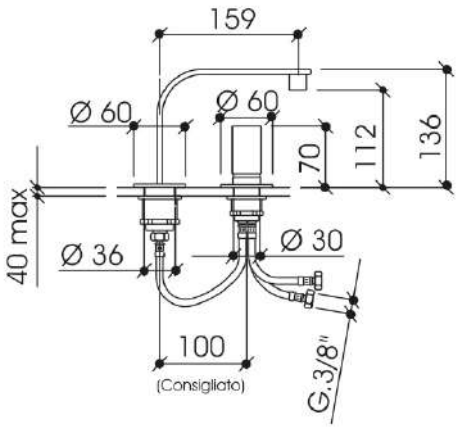

ELLE

113004/F

Wall mounted basin mixer with 112 mm deck mounted spout with waste

Chrome	113004/F

COMPONENTS

Wall mounted mixer

Chrome	112032/49B

Deck mounted 112 mm basin spout

Chrome	113000/29B

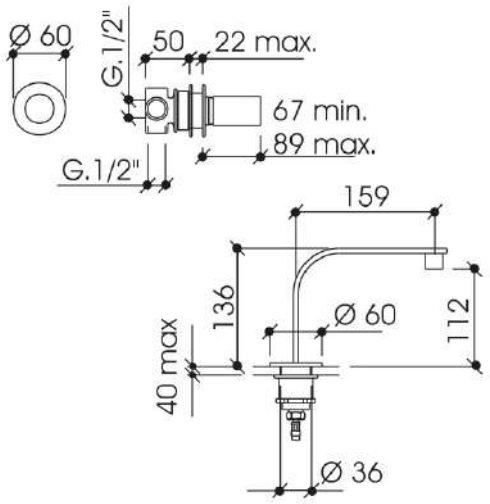

ELLE

113020/F

3 hole deck mounted basin mixer with 112 mm spout with waste

Chrome 113020/F

COMPONENTS

Pair of deck mounted valves

Chrome 113020/79B

3 hole deck mounted 112 mm basin spout

Chrome 113020/29B

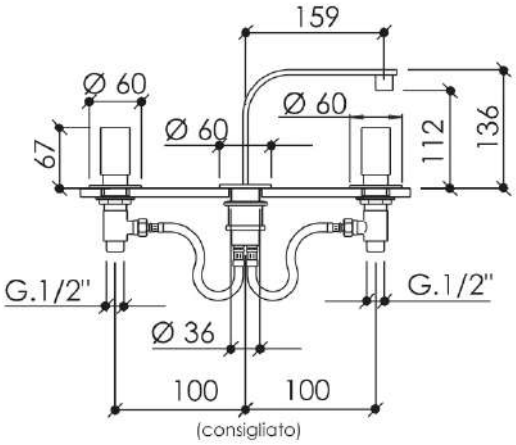

ELLE

113001/F

2 hole deck mounted basin mixer wth 243 mm spout with waste

Chrome	113001/F

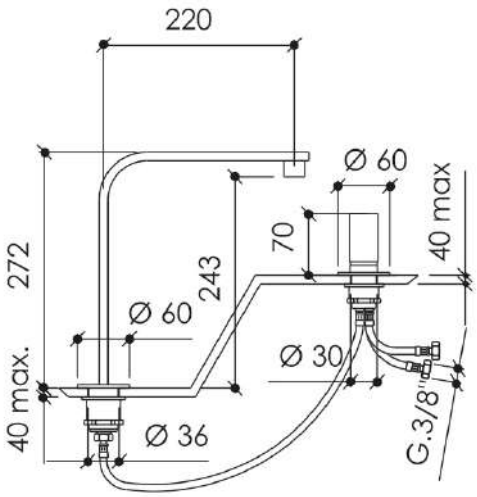

COMPONENTS

Deck mounted mixer

Chrome	113000/19C

Deck mounted 243 mm basin spout

Chrome	113001/29B

ELLE

113042/F

Wall mounted basin mixer with 243 mm spout with waste

Chrome	113042/F

COMPONENTS

Wall mounted mixer

Chrome	112032/49B

Deck mounted 243 mm basin spout

Chrome	113001/29B

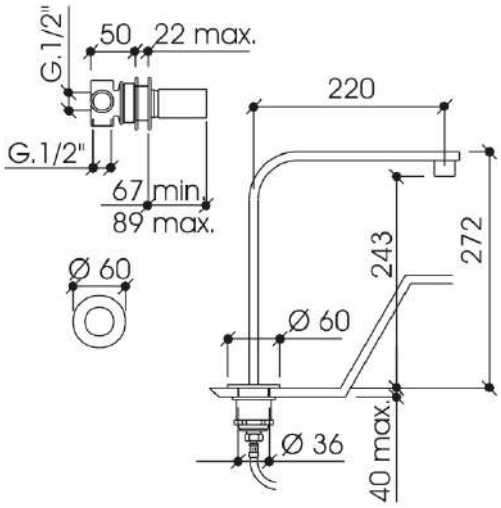

ELLE

113043/F

3 hole deck mounted basin mixer with 243 mm spout with waste

Chrome 113043/F

COMPONENTS

Pair of deck mounted valves

Chrome 113020/79B

3 hole deck mounted 243 mm basin spout

Chrome 113043/29B

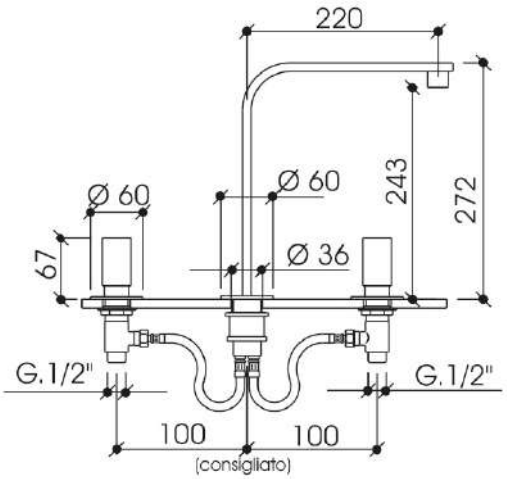

ELLE

113005/F

Single lever basin mixer and waste

Chrome 113005/F

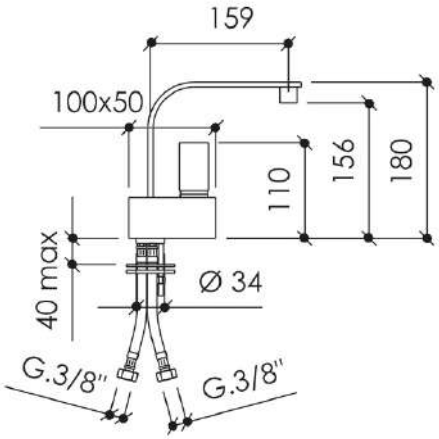

ELLE

113002

Wall mounted basin mixer with 212 mm spout

Chrome 113002

COMPONENTS

Wall mounted basin mixer - concealed part

Chrome 113003/19C

Finish set including 212 mm spout and flanges

Chrome 113002E

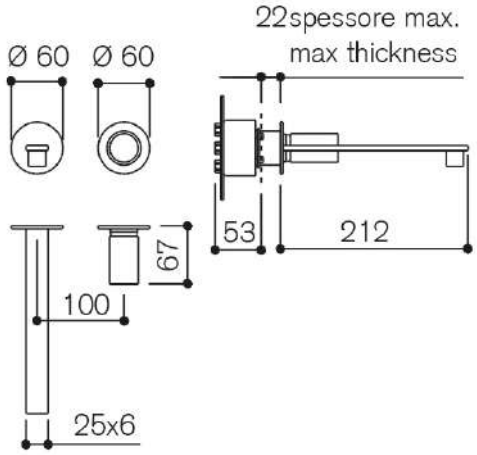

ELLE

113003

Wall mounted basin mixer with 212 mm spout and plate

Chrome 113003

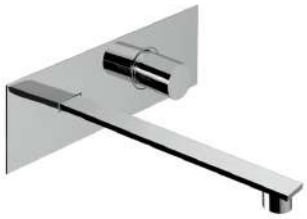

COMPONENTS

Wall mounted basin mixer - concealed part

Chrome 113003/19C

Finish set including 212 mm spout and plate

Chrome 113003E

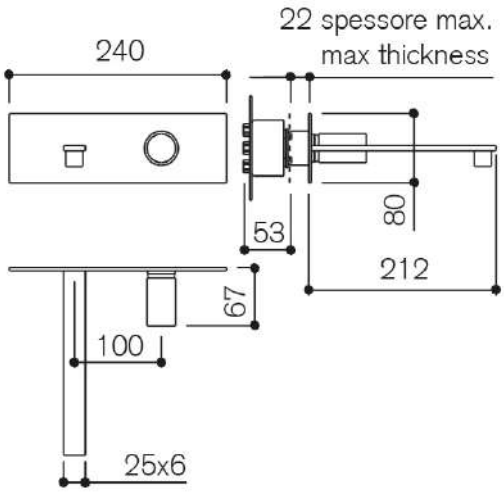

ELLE

113040

Deck mounted basin mixer with 212 mm wall mounted spout

Chrome	113040

COMPONENTS

Deck mounted mixer

Chrome	113000/19C

Wall mounted 212 mm basin spout

Chrome	113021

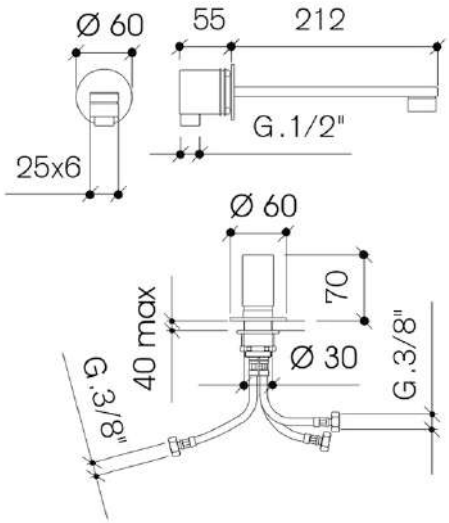

ELLE

114020/F

2 hole deck mounted bidet mixer with 84 mm spout with waste

Chrome	114020/F

COMPONENTS

Deck mounted mixer

Chrome	113000/19C

Deck mounted 84 mm bidet spout

Chrome	114020/29B

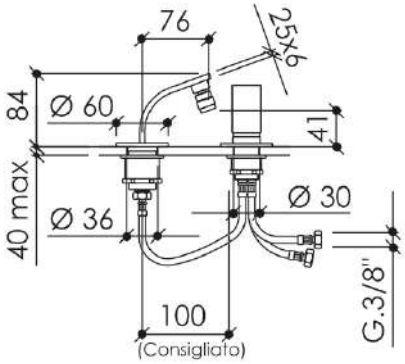

ELLE

114021/F

Wall mounted bidet mixer with 84 mm deck mounted spout with waste

Chrome	114021/F

COMPONENTS

Wall mounted mixer

Chrome	112032/49B

Deck mounted 84 mm bidet spout

Chrome	114020/29B

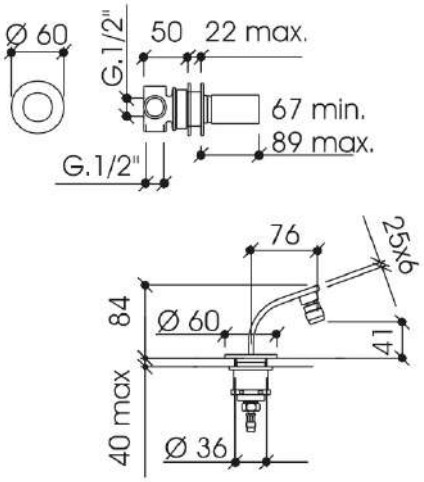

ELLE

114023/F

3 hole deck mounted bidet/cloakroom basin mixer with 84 mm spout with waste

Chrome 114023/F

COMPONENTS

Pair of deck mounted valves

Chrome 113020/79B

3 hole deck mounted 84 mm bidet spout

Chrome 114023/29B

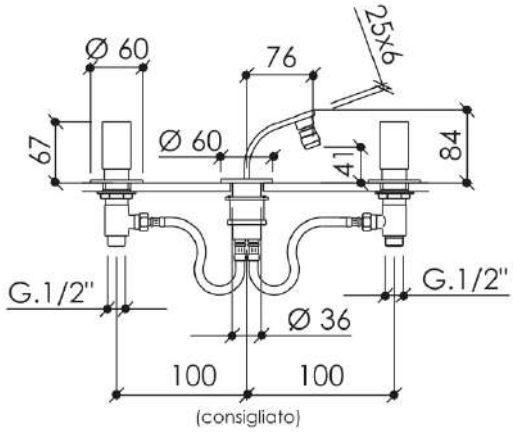

ELLE

114022/F

Single lever bidet mixer and waste

Chrome 114022/F

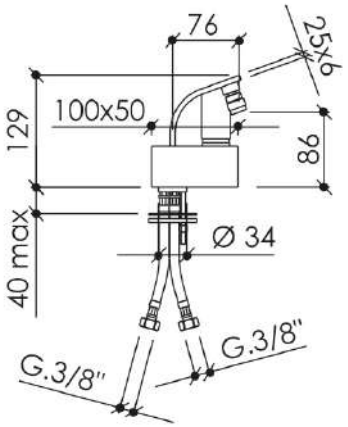

ELLE

112305

3 hole deck mounted bath/shower mixer with diverter, hand shower and 201 mm wall mounted spout

Chrome	112305

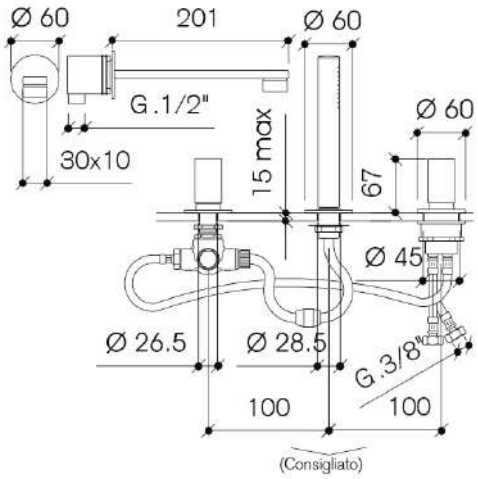

COMPONENTS

Deck mounted mixer

Chrome	112300/19C

Deck mounted bath 2 way diverter

Chrome	112300/229C

Deck mounted hand shower kit

Chrome	112300/189B

Wall mounted 201 mm bath spout

Chrome	112044/19B

ELLE

112307

2 hole deck mounted bath mixer with 116 mm spout

Chrome	112307

COMPONENTS

Deck mounted mixer

Chrome	112300/19C

Deck mounted 116 mm bath spout

Chrome	112300/29B

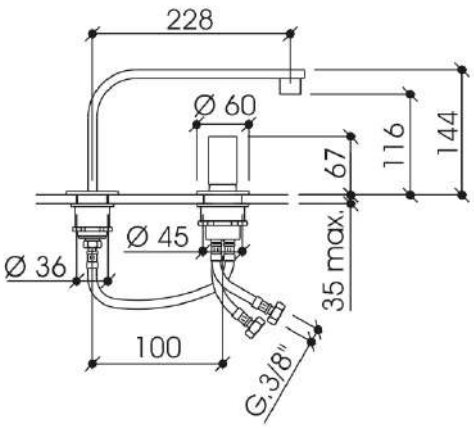

ELLE

112306

Wall mounted bath mixer with 116 mm deck mounted spout

Chrome	112306

COMPONENTS

Wall mounted mixer

Chrome	112032/49B

Deck mounted 116 mm bath spout

Chrome	112300/29B

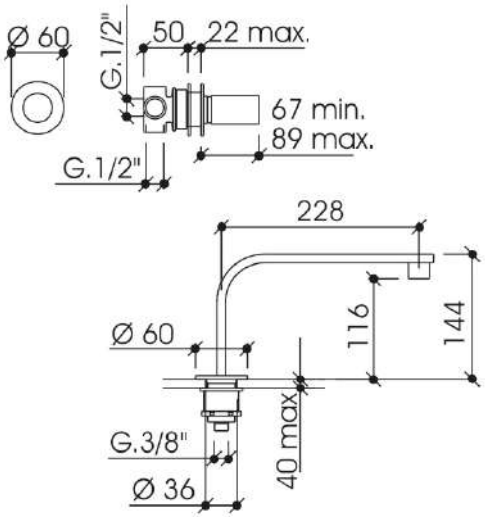

ELLE

112300

4 hole deck mounted bath/shower mixer with diverter, hand shower and 116 mm spout

Chrome	112300

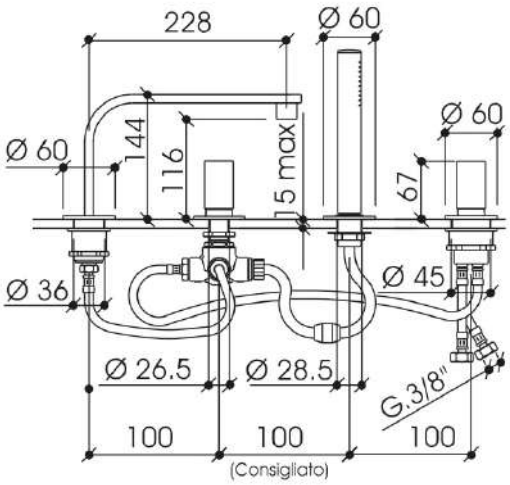

COMPONENTS

Deck mounted mixer	
Chrome	112300/19C
Deck mounted bath 2 way diverter	
Chrome	112300/229C
Deck mounted hand shower kit	
Chrome	112300/189B
Deck mounted 116 mm bath spout	
Chrome	112300/29B

ELLE

112044

Wall mounted bath mixer with 201 mm spout

Chrome	112044

COMPONENTS

Wall mounted mixer

Chrome	112032/49B

Wall mounted 201 mm bath spout

Chrome	112044/19B

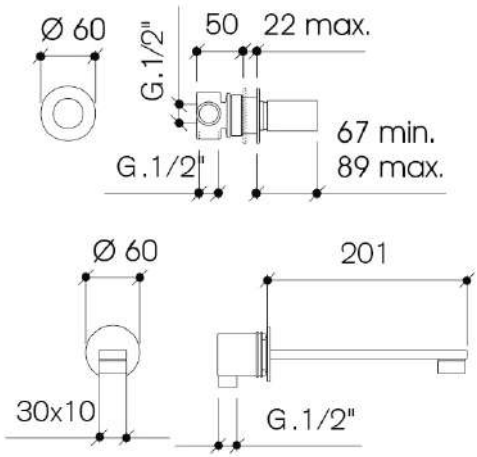

ELLE

112323

Wall mounted bath/shower mixer with diverter, hand shower and 201 mm spout

Chrome 112323

COMPONENTS

Wall mounted bath shower mixer with diverter - concealed part

Chrome 112320/19C

Finish set including 201 mm spout, flanges and hand shower kit

Chrome 112323E

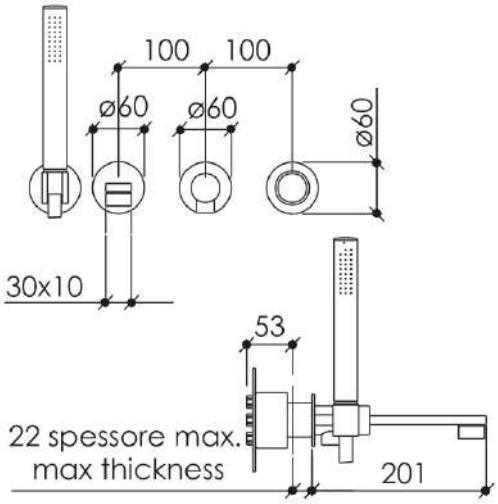

ELLE

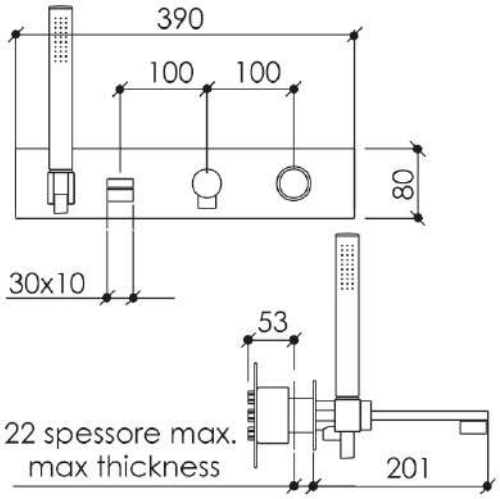

112320

Wall mounted bath/shower mixer with plate, diverter, hand shower and 201 mm spout

Chrome 112320

COMPONENTS

Wall mounted bath shower mixer with diverter - concealed part

Chrome 112320/19C

Finish set including 201 mm spout, plate and hand shower kit

Chrome 112320E

ELLE

112032/19C

340 mm wall mounted shower

Chrome	112032/19C

COMPONENTS

Concealed shower outlet

Chrome	112032/59A

Finish set 340 mm shower head

Chrome	112032/19B

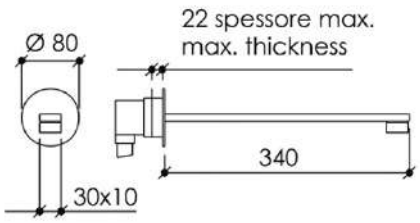

ELLE

112309

Deck mounted bath mixer with 695 mm floor mounted spout

Chrome	112309

COMPONENTS

Deck mounted mixer

Chrome	112300/19C

Floor mounted 695 mm bath spout

Chrome	112321/29C

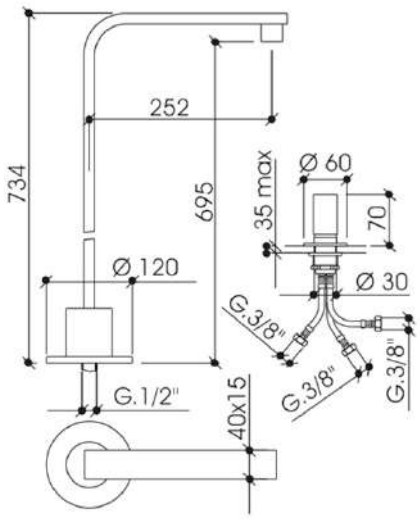

ELLE

112308

Wall mounted bath mixer with 695 mm floor mounted spout

Chrome	112308

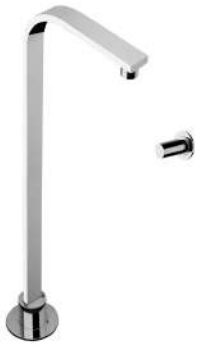

COMPONENTS

Wall mounted mixer

Chrome	112032/49B

Floor mounted 695 mm bath spout

Chrome	112321/29C

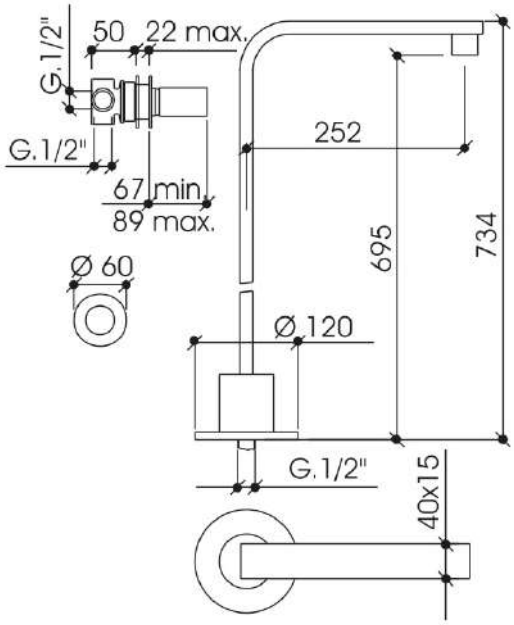

ELLE

112321

3 hole deck mounted bath/shower mixer with diverter, hand shower and 695 mm floor mounted spout

Chrome	112321

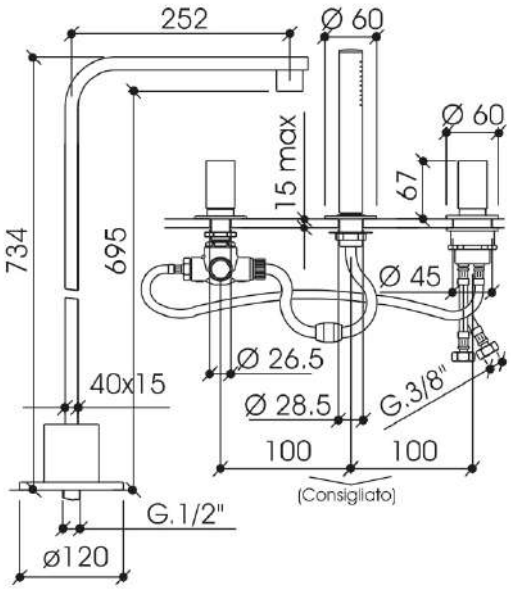

COMPONENTS

Deck mounted mixer	
Chrome	112300/19C
Deck mounted bath 2 way diverter	
Chrome	112300/229C
Deck mounted hand shower kit	
Chrome	112300/189B
Floor mounted 695 mm bath spout	
Chrome	112321/29C

ELLE

112322/29B

Floor mounted shower column

Chrome 112322/29B

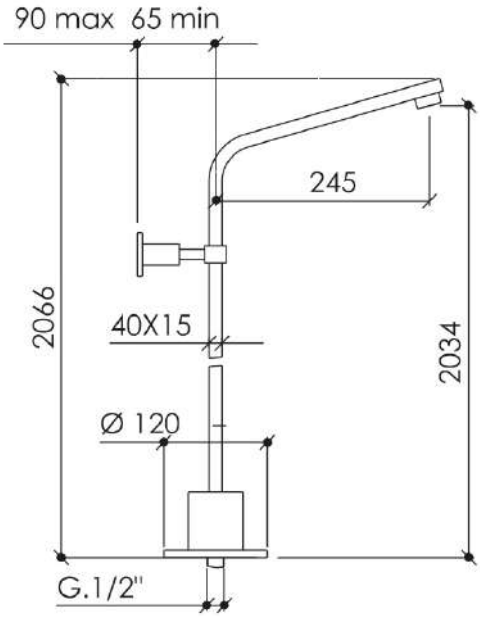

SHOWERS

SHOWERS

CONTEMPORANEO**ITALIANO**

SHOWERS

112700

Exposed round shower column, arm length 400 mm, height 2.137 mm

Chrome 112700

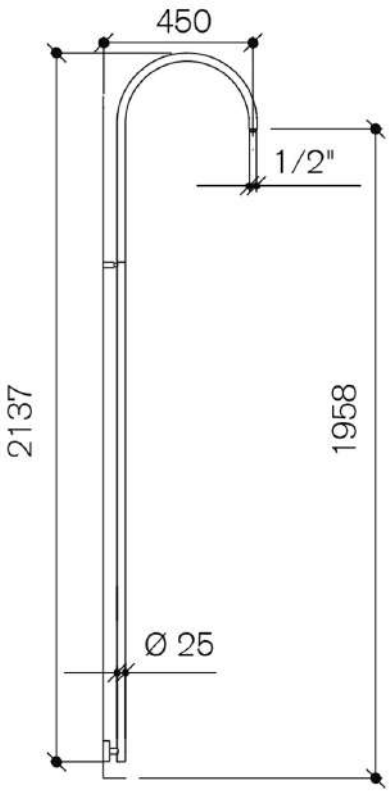

SHOWERS

112701

Exposed round shower column, arm length 300 mm, height 2.080 mm

Chrome 112701

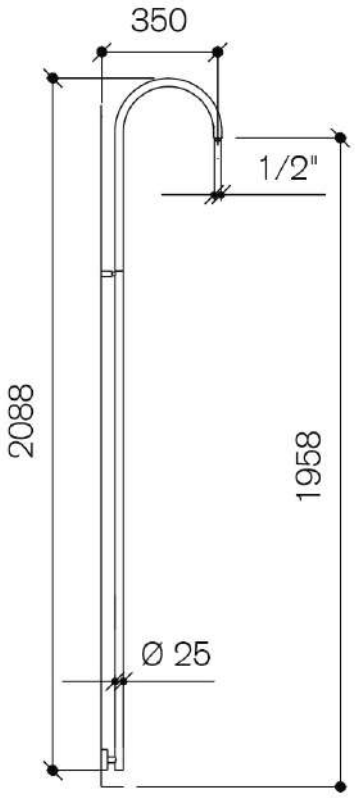

SHOWERS

112702

Exposed “u” shower column, arm length 400 mm, height 2.020 mm

Chrome 112702

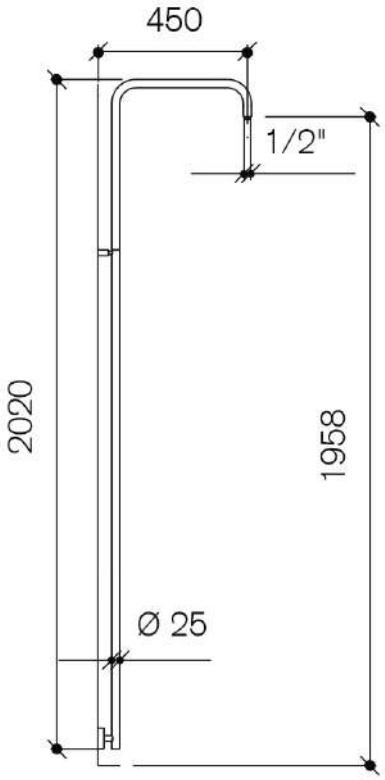

SHOWERS

112703

Exposed “u” shower column, arm length 300 mm, height 2.020 mm

Chrome 112703

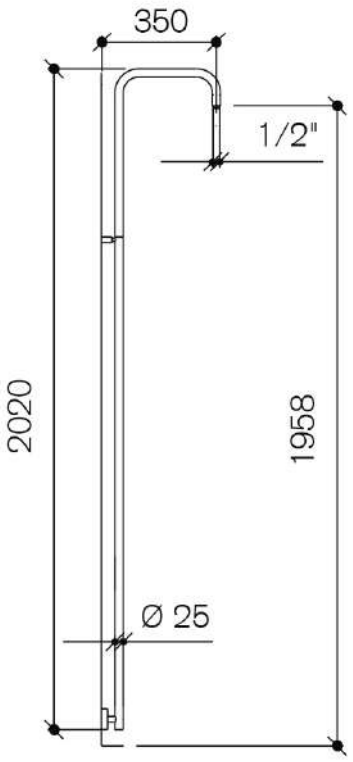

SHOWERS

112710

Exposed “u” shower column, arm length 400 mm, height 1.754 mm

Chrome 112710

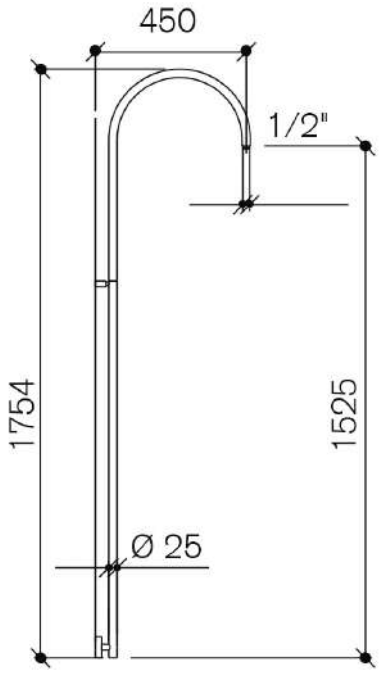

SHOWERS

112711

Exposed round shower column, arm length 300 mm, height 1.700 mm

Chrome 112711

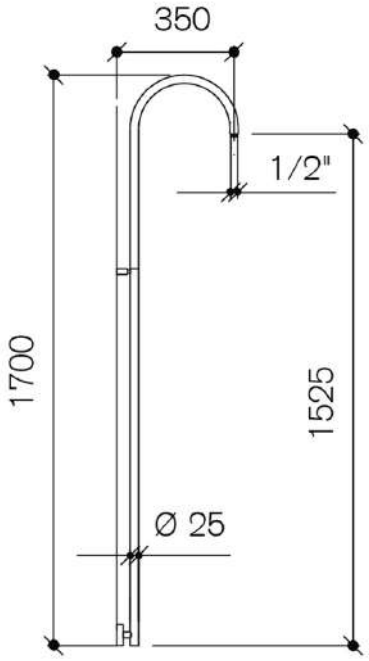

SHOWERS

112712

Exposed “u” shower column, arm length 400 mm, height 1.637 mm

Chrome 112712

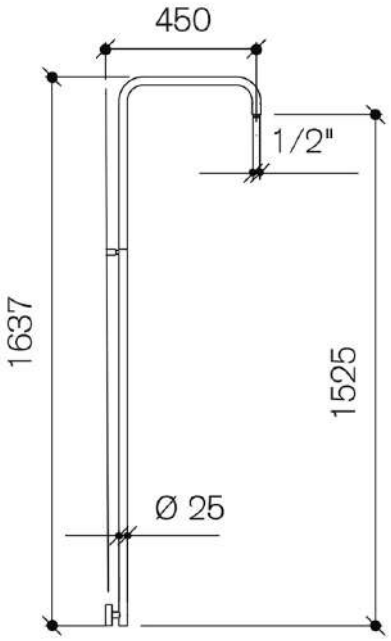

SHOWERS

112713

Exposed “u” shower column, arm length 300 mm, height 1.637 mm

Chrome	112713

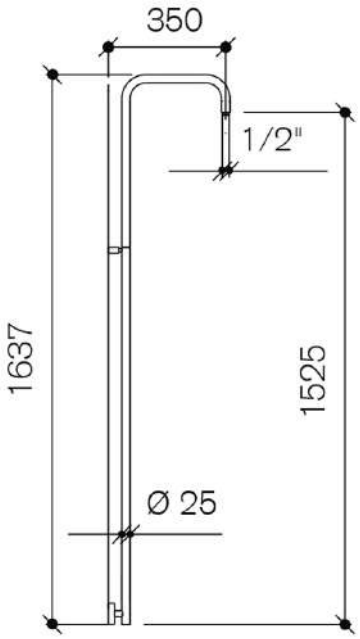

SHOWERS

112720

Exposed round shower column, arm length 400 mm, height 1.220 mm

Chrome 112720

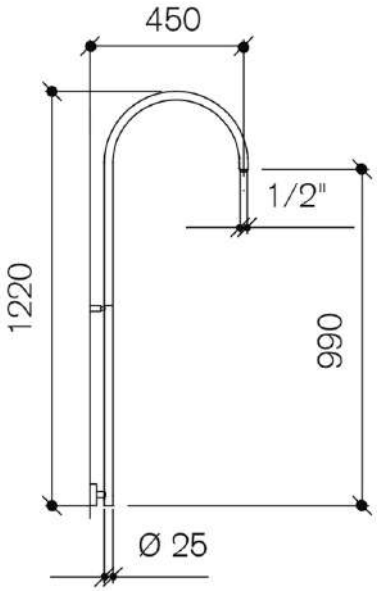

SHOWERS

112721

Exposed round shower column, arm length 300 mm, height 1.170 mm

Chrome 112721

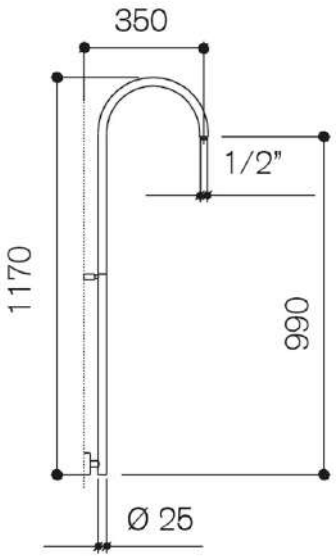

SHOWERS

112722

Exposed “u” shower column, arm length 400 mm, height 1.103 mm

Chrome 112722

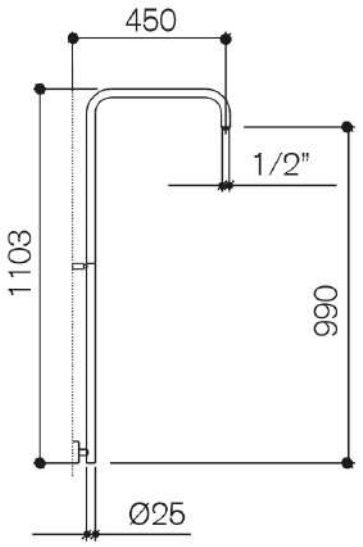

SHOWERS

112723

Exposed “u” shower column, arm length 300 mm, height 1.103 mm

Chrome 112723

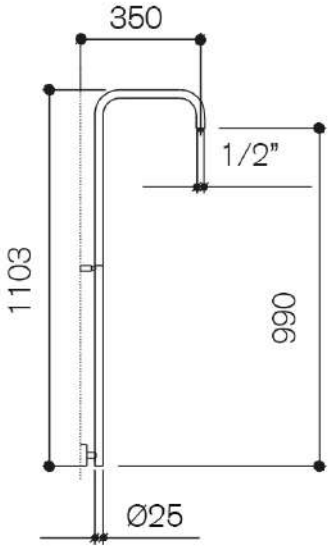

SHOWERS

112730

Exposed round shower column, arm length 400 mm, height 1.220 mm for pre-existing connection

Chrome 112730

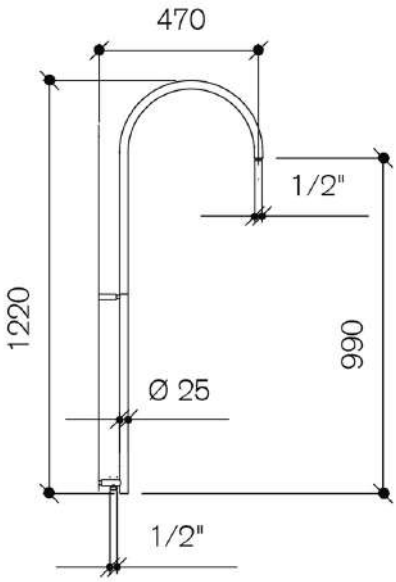

SHOWERS

112731

Exposed round shower column, arm length 300 mm, height 1.170 mm for pre-existing connection

Chrome 112731

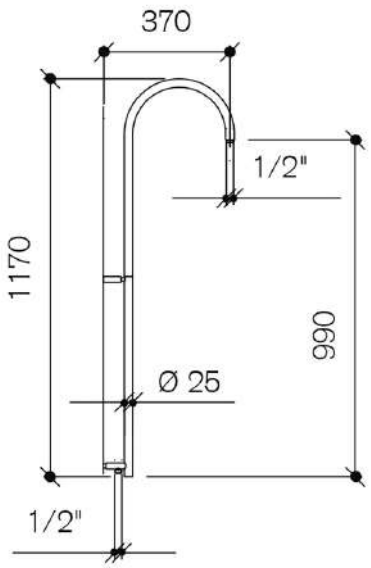

SHOWERS

112732

Exposed round shower column, arm length 400 mm, height 1.220 mm for pre-existing connection

Chrome 112732

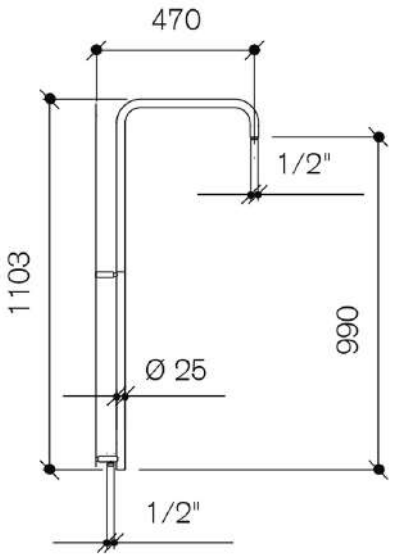

SHOWERS

112733

Exposed “u” shower column, arm length 300 mm, height 1.103 mm for pre-existing connection

Chrome 112733

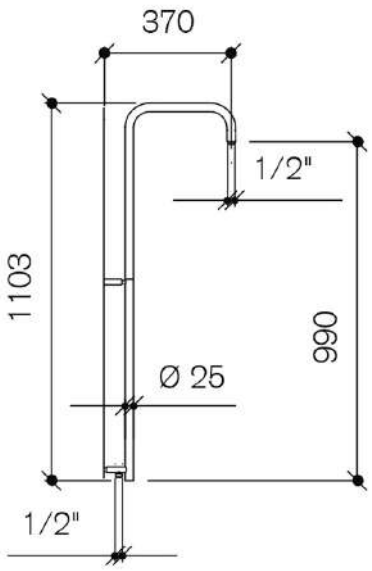

SHOWERS

112740

Exposed round shower column, arm length 400 mm, height 1.174 mm with mixer connection

Chrome 112740

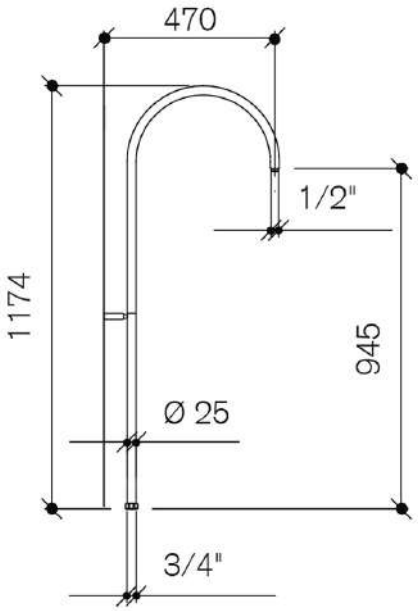

SHOWERS

112741

Exposed round shower column, arm length 300 mm, height 1.120 mm with mixer connection

Chrome 112741

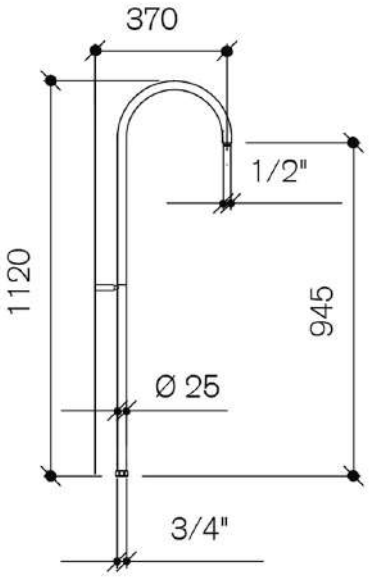

SHOWERS

112742

Exposed “u” shower column, arm length 400 mm, height 1.056 mm with mixer connection

Chrome 112742

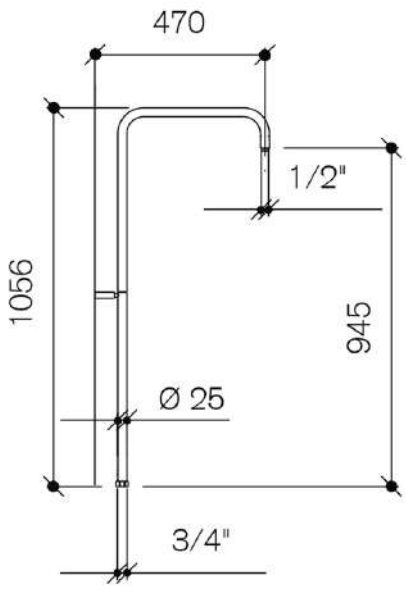

SHOWERS

112743

Exposed “u” shower column, arm length 400 mm, height 1.056 mm with mixer connection

Chrome 112743

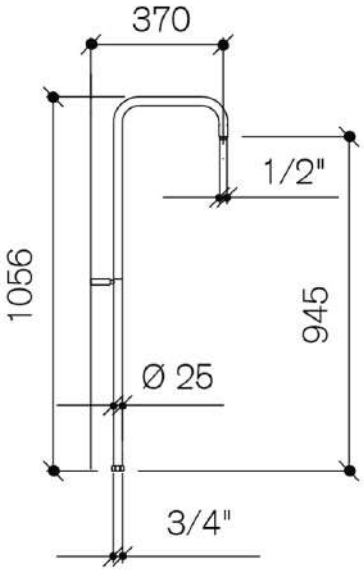

SHOWERS

302132/49A

300 mm wall mounted shower arm

Chrome	302132/49A
Matt Black	B302132/49A
Matt White	W302132/49A
Brushed Nickel	S302132/49A
Polished Gold	G302132/49A
Brushed Gold	H302132/49A
Brushed Rose Gold	R302132/49A
Crude	K302132/49A

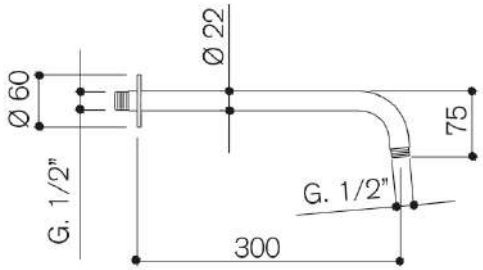

SHOWERS

302140/49A

Wall mounted shower arm 300 mm with connection for anti-tamper flow regulator

Chrome	302140/49A
Matt Black	B302140/49A
Matt White	W302140/49A
Brushed Nickel	S302140/49A
Polished Gold	G302140/49A
Brushed Gold	H302140/49A
Brushed Rose Gold	R302140/49A
Crude	K302140/49A

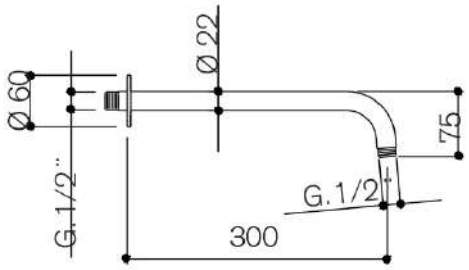

SHOWERS

302142/49A

400 mm wall mounted shower arm

Chrome	302142/49A
Matt Black	B302142/49A
Matt White	W302142/49A
Brushed Nickel	S302142/49A
Polished Gold	G302142/49A
Brushed Gold	H302142/49A
Brushed Rose Gold	R302142/49A
Crude	K302142/49A

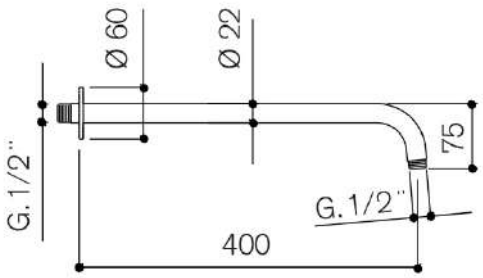

SHOWERS

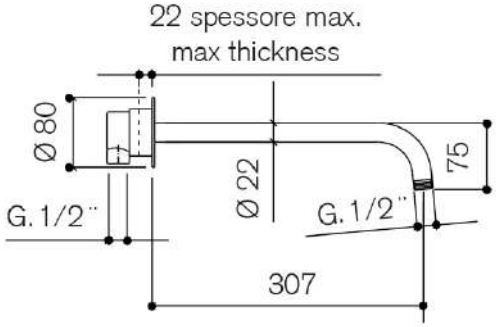

112132/19D

Wall mounted shower arm 313 mm with connection for anti-tamper flow regulator

Chrome	112132/19D
Matt Black	B112132/19D
Matt White	W112132/19D
Brushed Nickel	S112132/19D
Polished Gold	G112132/19D
Brushed Gold	H112132/19D
Brushed Rose Gold	R112132/19D
Crude	K112132/19D

COMPONENTS

Concealed shower outlet

Chrome	112032/59A

Finish set 313 mm shower head

Chrome	112132/19B
Matt Black	B112132/19B
Matt White	W112132/19B
Brushed Nickel	S112132/19B
Polished Gold	G112132/19B
Brushed Gold	H112132/19B
Brushed Rose Gold	R112132/19B
Crude	K112132/19B

SHOWERS

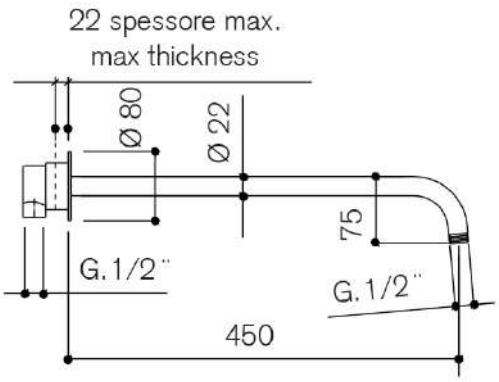

302141/49A

Wall mounted shower arm 450 mm with connection for anti-tamper flow regulator

Chrome	302141/49A
Matt Black	B302141/49A
Matt White	W302141/49A
Brushed Nickel	S302141/49A
Polished Gold	G302141/49A
Brushed Gold	H302141/49A
Brushed Rose Gold	R302141/49A
Crude	K302141/49A

COMPONENTS

Concealed shower outlet

Chrome	112032/59A

Finish set 450 mm shower head

Chrome	302141/19B
Matt Black	B302141/19B
Matt White	W302141/19B
Brushed Nickel	S302141/19B
Polished Gold	G302141/19B
Brushed Gold	H302141/19B
Brushed Rose Gold	R302141/19B
Crude	K302141/19B

SHOWERS

112232/19A

75 mm ceiling mounted shower arm

Chrome	112232/19A
Matt Black	B112232/19A
Matt White	W112232/19A
Brushed Nickel	S112232/19A
Polished Gold	G112232/19A
Brushed Gold	H112232/19A
Brushed Rose Gold	R112232/19A
Crude	K112232/19A

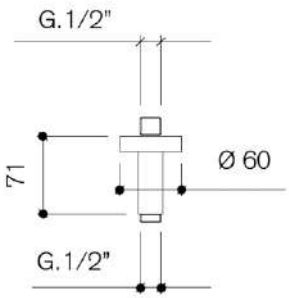

SHOWERS

302133/49A

Ø 200 mm shower head

Chrome	302133/49A
Matt Black	B302133/49A
Matt White	W302133/49A
Brushed Nickel	S302133/49A
Polished Gold	G302133/49A
Brushed Gold	H302133/49A
Brushed Rose Gold	R302133/49A
Crude	K302133/49A

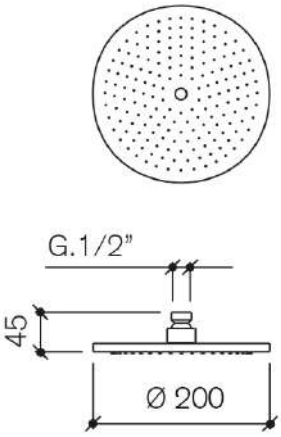

SHOWERS

302134/49A

Ø 300 mm shower head

Chrome	302134/49A
Matt Black	B302134/49A
Matt White	W302134/49A
Brushed Nickel	S302134/49A
Polished Gold	G302134/49A
Brushed Gold	H302134/49A
Brushed Rose Gold	R302134/49A

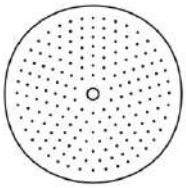

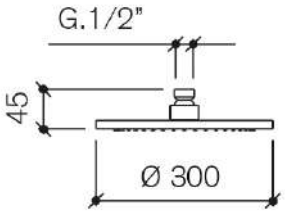

SHOWERS

302135/49A

200 mm square shower head

Chrome	302135/49A
Matt Black	B302135/49A
Matt White	W302135/49A
Brushed Nickel	S302135/49A
Polished Gold	G302135/49A
Brushed Gold	H302135/49A
Brushed Rose Gold	R302135/49A

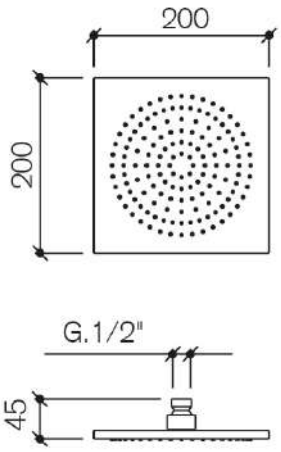

SHOWERS

302136/49A

300 mm square shower head

Chrome	302136/49A
Matt Black	B302136/49A
Matt White	W302136/49A
Brushed Nickel	S302136/49A
Polished Gold	G302136/49A
Brushed Gold	H302136/49A
Brushed Rose Gold	R302136/49A

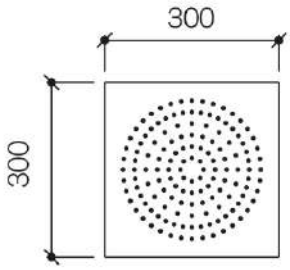

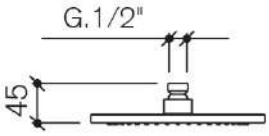

SHOWERS

112132/49A

ø 130 mm shower head

Chrome	112132/49A
Matt Black	B112132/49A
Brushed Nickel	S112132/49A
Polished Gold	G112132/49A

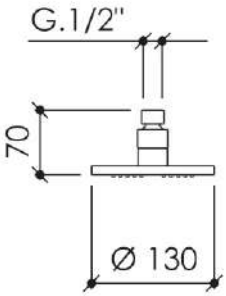

SHOWERS

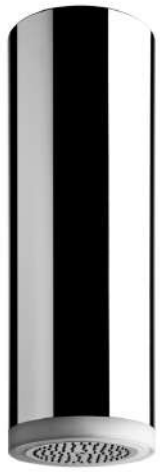

112600

Ceiling mounted shower head with light, 400 mm projection

Chrome	112600
Matt Black	B112600
Brushed Nickel	S112600
Polished Gold	G112600

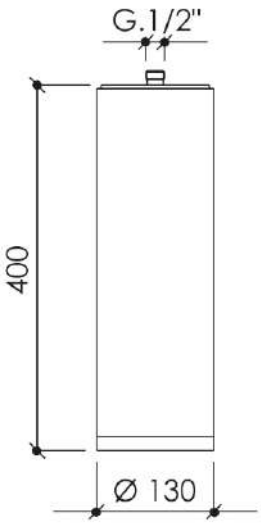

SHOWERS

112610

Ceiling mounted shower head with light, 200 mm projection

Chrome	112610
Matt Black	B112610
Brushed Nickel	S112610
Polished Gold	G112610

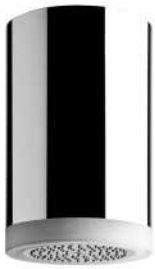

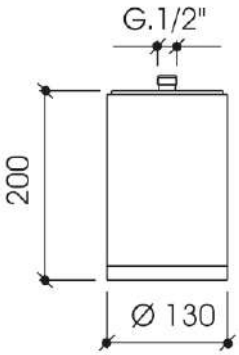

SHOWERS

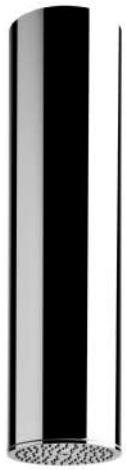

112601

Ceiling mounted shower head, 400 mm projection

Chrome	112601
Matt Black	B112601
Brushed Nickel	S112601
Polished Gold	G112601

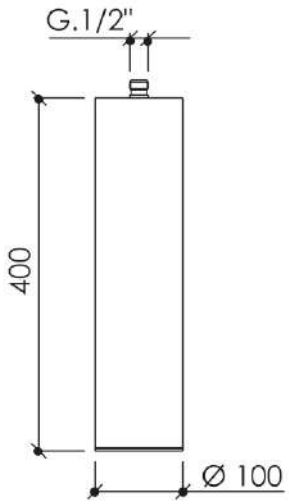

SHOWERS

112611

Ceiling mounted shower head, 200 mm projection

Chrome	112611
Matt Black	B112611
Brushed Nickel	S112611
Polished Gold	G112611

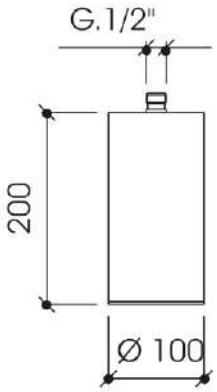

SHOWERS

112602

Wall mounted shower head

Chrome	112602
Matt Black	B112602
Matt White	W112602
Brushed Nickel	S112602
Polished Gold	G112602
Brushed Gold	H112602
Brushed Rose Gold	R112602

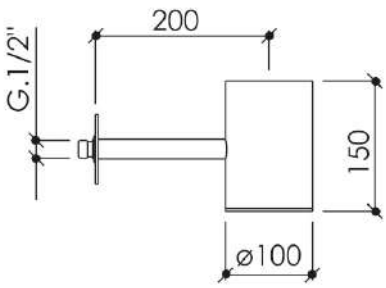

SHOWERS

112605

Body jet

Chrome 112605

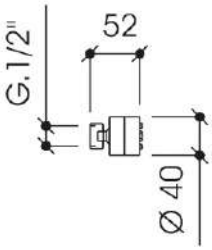

SHOWERS

112330/99A

Shower wall outlet

Chrome	112330/99A
Matt Black	B112330/99A
Matt White	W112330/99A
Brushed Nickel	S112330/99A
Polished Gold	G112330/99A
Brushed Gold	H112330/99A
Brushed Rose Gold	R112330/99A
Crude	K112330/99A

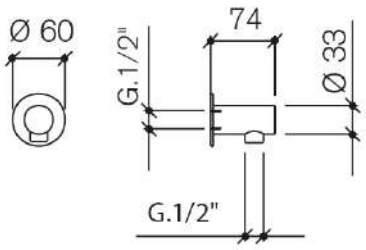

SHOWERS

112330/89A

Shower wall outlet with hand shower holder

Chrome 112330/89A

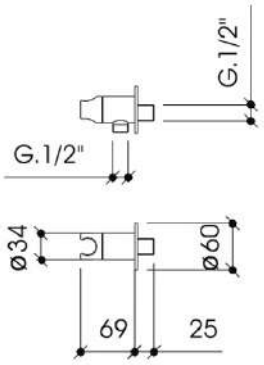

SHOWERS

112380/99B

Adjustable hand shower holder

Chrome	112380/99B
Matt Black	B112380/99B
Matt White	W112380/99B
Brushed Nickel	S112380/99B
Polished Gold	G112380/99B
Brushed Gold	H112380/99B
Brushed Rose Gold	R112380/99B

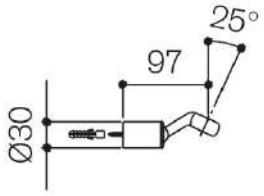

SHOWERS

112330/99B

Shower wall outlet including hand shower

Chrome	112330/99B
Matt Black	B112330/99B
Matt White	W112330/99B
Brushed Nickel	S112330/99B
Polished Gold	G112330/99B
Brushed Gold	H112330/99B
Brushed Rose Gold	R112330/99B
Crude	K112330/99B

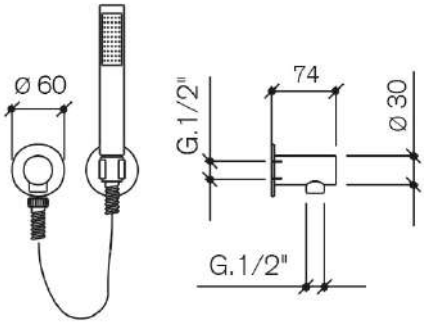

SHOWERS

112330/99C

Shower wall outlet with plate including hand shower

Chrome	112330/99C
Matt Black	B112330/99C
Brushed Nickel	S112330/99C
Polished Gold	G112330/99C

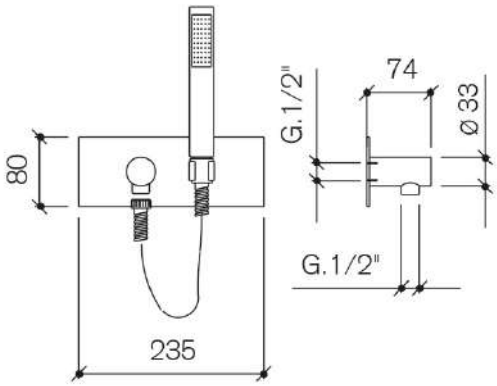

SHOWERS

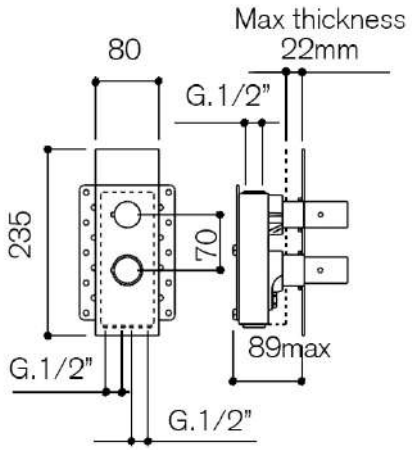

122322

Concealed thermostatic shower mixer

Chrome	122322
Matt Black	B122322
Brushed Nickel	S122322
Polished Gold	G122322
Brushed Gold	H122322

COMPONENTS

Thermostatic shower mixer - concealed part

Chrome	122322/19C
Matt Black	B122322/19C
Brushed Nickel	S122322/19C
Polished Gold	G122322/19C
Brushed Gold	H122322/19C

Finish set including plate

Chrome	122322E
Matt Black	B122322E
Brushed Nickel	S122322E
Polished Gold	G122322E
Brushed Gold	H122322E

SHOWERS

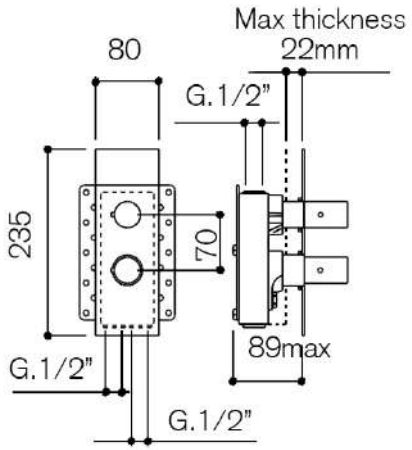

122322V

Vertical concealed thermostatic shower mixer

Chrome	122322V
Matt Black	B122322V
Brushed Nickel	S122322V
Polished Gold	G122322V
Brushed Gold	H122322V

COMPONENTS

Thermostatic shower mixer - concealed part

Chrome	122322/19C
Matt Black	B122322/19C
Brushed Nickel	S122322/19C
Polished Gold	G122322/19C
Brushed Gold	H122322/19C

Finish set including plate

Chrome	122322VE
Matt Black	B122322VE
Brushed Nickel	S122322VE
Polished Gold	G122322VE
Brushed Gold	H122322VE

SHOWERS

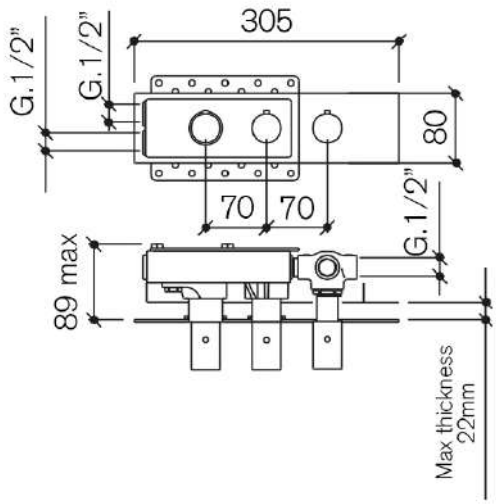

122323

Concealed thermostatic shower mixer with 2/3 way diverter

Chrome	122323
Matt Black	B122323
Brushed Nickel	S122323
Polished Gold	G122323
Brushed Gold	H122323

COMPONENTS

Thermostatic shower mixer - concealed part

Chrome	122323/19C
Matt Black	B122323/19C
Brushed Nickel	S122323/19C
Polished Gold	G122323/19C
Brushed Gold	H122323/19C

Finish set including plate

Chrome	122323E
Matt Black	B122323E
Brushed Nickel	S122323E
Polished Gold	G122323E
Brushed Gold	H122323E

SHOWERS

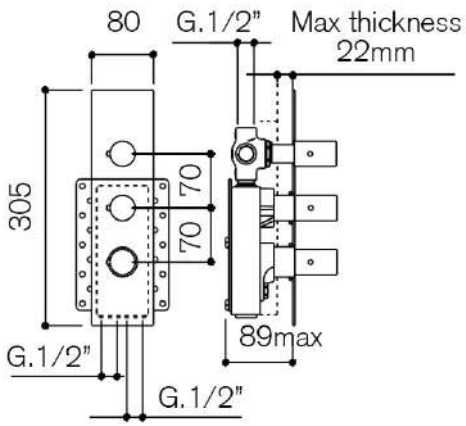

122323V

Vertical concealed thermostatic shower mixer with 2/3 way diverter

Chrome	122323V
Matt Black	B122323V
Brushed Nickel	S122323V
Polished Gold	G122323V
Brushed Gold	H122323V

COMPONENTS

Thermostatic shower mixer - concealed part

Chrome	122323/19C
Matt Black	B122323/19C
Brushed Nickel	S122323/19C
Polished Gold	G122323/19C
Brushed Gold	H122323/19C

Finish set including plate

Chrome	122323VE
Matt Black	B122323VE
Brushed Nickel	S122323VE
Polished Gold	G122323VE
Brushed Gold	H122323VE

SHOWERS

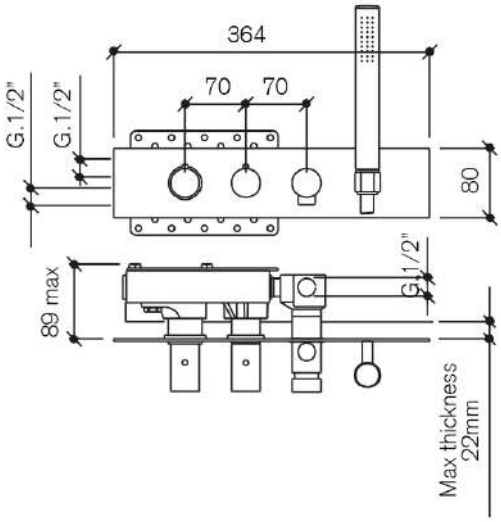

122324

Concealed thermostatic shower mixer with diverter and hand shower

Chrome	122324
Matt Black	B122324
Matt White	W122324
Brushed Nickel	S122324
Polished Gold	G122324
Brushed Gold	H122324
Brushed Rose Gold	R122324

COMPONENTS

Thermostatic shower mixer - concealed part

Chrome	122324/19C
Matt Black	B122324/19C
Matt White	W122324/19C
Brushed Nickel	S122324/19C
Polished Gold	G122324/19C
Brushed Gold	H122324/19C
Brushed Rose Gold	R122324/19C

Finish set including plate and hand shower kit

Chrome	122324E
Matt Black	B122324E
Matt White	W122324E
Brushed Nickel	S122324E
Polished Gold	G122324E
Brushed Gold	H122324E
Brushed Rose Gold	R122324E

SHOWERS

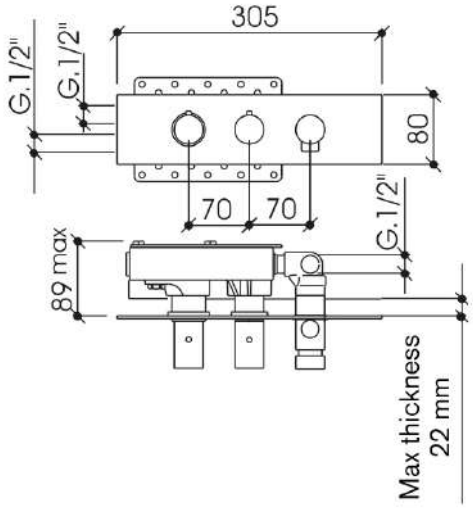

122328

Concealed thermostatic shower mixer with diverter to use with slider rail

Chrome	122328
Matt Black	B122328
Brushed Nickel	S122328
Polished Gold	G122328
Brushed Gold	H122328

COMPONENTS

Thermostatic shower mixer - concealed part

Chrome	122324/19C
Matt Black	B122324/19C
Brushed Nickel	S122324/19C
Polished Gold	G122324/19C
Brushed Gold	H122324/19C

Finish set including plate

Chrome	122328E
Matt Black	B122328E
Brushed Nickel	S122328E
Polished Gold	G122328E
Brushed Gold	H122328E

SHOWERS

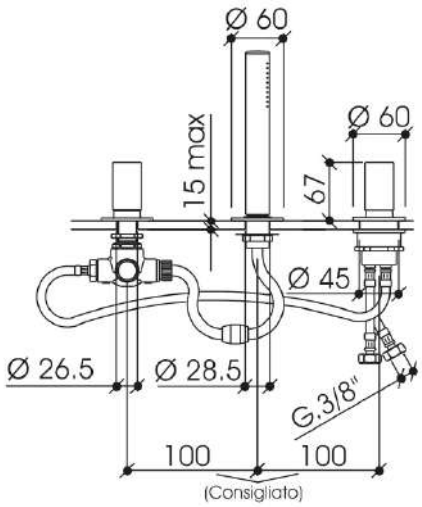

112303

3 hole deck mounted bath shower mixer with diverter and hand shower

Chrome	112303
Matt Black	B112303
Matt White	W112303
Brushed Nickel	S112303
Polished Gold	G112303
Brushed Gold	H112303
Brushed Rose Gold	R112303
Crude	K112303

COMPONENTS

Deck mounted mixer

Chrome	112300/19C
Matt Black	B112300/19C
Matt White	W112300/19C
Brushed Nickel	S112300/19C
Polished Gold	G112300/19C
Brushed Gold	H112300/19C
Brushed Rose Gold	R112300/19C
Crude	K112300/19C

Deck mounted bath 2 way diverter

Chrome	112300/229C
Matt Black	B112300/229C
Matt White	W112300/229C
Brushed Nickel	S112300/229C
Polished Gold	G112300/229C
Brushed Gold	H112300/229C
Brushed Rose Gold	R112300/229C
Crude	K112300/229C

Deck mounted hand shower kit

Chrome	112300/189B
Matt Black	B112300/189B
Matt White	W112300/189B
Brushed Nickel	S112300/189B
Polished Gold	G112300/189B
Brushed Gold	H112300/189B
Brushed Rose Gold	R112300/189B
Crude	K112300/189B

SHOWERS

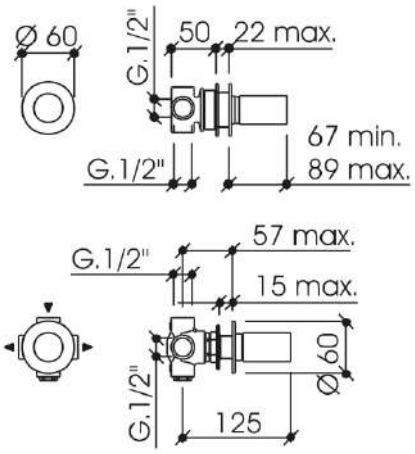

112052

Wall mounted bath mixer with 2 way diverter

Chrome	112052
Matt Black	B112052
Matt White	W112052
Brushed Nickel	S112052
Polished Gold	G112052
Brushed Gold	H112052
Brushed Rose Gold	R112052
Crude	K112052

COMPONENTS

Wall mounted mixer

Chrome	112032/49B
Matt Black	B112032/49B
Matt White	W112032/49B
Brushed Nickel	S112032/49B
Polished Gold	G112032/49B
Brushed Gold	H112032/49B
Brushed Rose Gold	R112032/49B
Crude	K112032/49B

Wall mounted 2 way diverter

Chrome	112302/229B
Matt Black	B112302/229B
Matt White	W112302/229B
Brushed Nickel	S112302/229B
Polished Gold	G112302/229B
Brushed Gold	H112302/229B
Brushed Rose Gold	R112302/229B
Crude	K112302/229B

SHOWERS

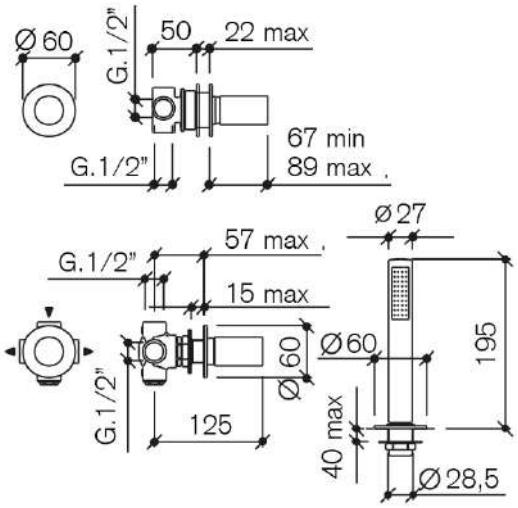

112032/49H

Wall mounted mixer with 2 way diverter and deck mounted hand shower

Chrome	112032/49H
Matt Black	B112032/49H
Matt White	W112032/49H
Brushed Nickel	S112032/49H
Polished Gold	G112032/49H
Brushed Gold	H112032/49H
Brushed Rose Gold	R112032/49H
Crude	K112032/49H

COMPONENTS

Wall mounted mixer

Chrome	112032/49B
Matt Black	B112032/49B
Matt White	W112032/49B
Brushed Nickel	S112032/49B
Polished Gold	G112032/49B
Brushed Gold	H112032/49B
Brushed Rose Gold	R112032/49B
Crude	K112032/49B

Wall mounted 2 way diverter

Chrome	112302/229B
Matt Black	B112302/229B
Matt White	W112302/229B
Brushed Nickel	S112302/229B
Polished Gold	G112302/229B
Brushed Gold	H112302/229B
Brushed Rose Gold	R112302/229B
Crude	K112302/229B

Deck mounted hand shower kit

Chrome	112300/189B
Matt Black	B112300/189B
Matt White	W112300/189B
Brushed Nickel	S112300/189B
Polished Gold	G112300/189B
Brushed Gold	H112300/189B
Brushed Rose Gold	R112300/189B
Crude	K112300/189B

SHOWERS

112302/229B

Wall mounted 2 way diverter

In case this item appears as a component of a more complex product, the colors available remain the ones indicated in the series of reference.

Chrome	112302/229B
Matt Black	B112302/229B
Matt White	W112302/229B
Brushed Nickel	S112302/229B
Polished Gold	G112302/229B
Brushed Gold	H112302/229B
Brushed Rose Gold	R112302/229B
Crude	K112302/229B

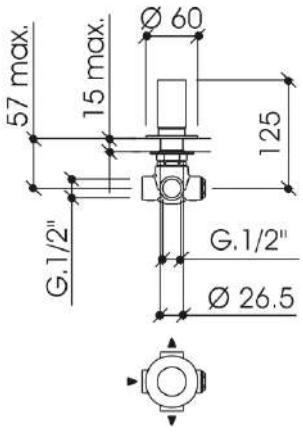

SHOWERS

112301/229B

Wall mounted 3 way diverter

Chrome	112301/229B
Matt Black	B112301/229B
Matt White	W112301/229B
Brushed Nickel	S112301/229B
Polished Gold	G112301/229B
Brushed Gold	H112301/229B
Brushed Rose Gold	R112301/229B
Crude	K112301/229B

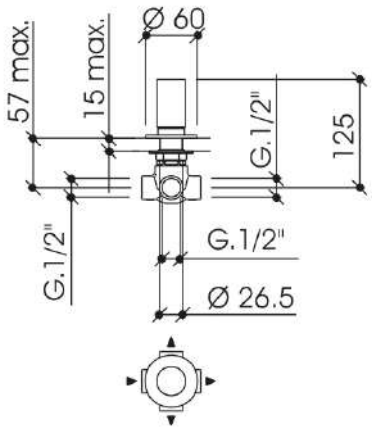

SHOWERS

112032/49B

Wall mounted mixer

In case this item appears as a component of a more complex product, the colors available remain the ones indicated in the series of reference.

Chrome	112032/49B
Matt Black	B112032/49B
Matt White	W112032/49B
Brushed Nickel	S112032/49B
Polished Gold	G112032/49B
Brushed Gold	H112032/49B
Brushed Rose Gold	R112032/49B
Crude	K112032/49B

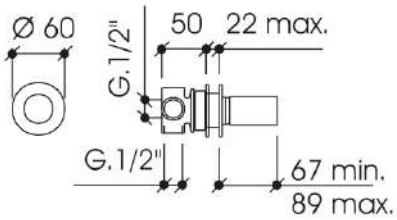

SHOWERS

112329

Wall mounted manual mixer and diverter with round plate

Chrome 112329

COMPONENTS

Wall mounted shower mixer with diverter - concealed part

Chrome 112329/19C

Finish set including round plate

Chrome 302327E

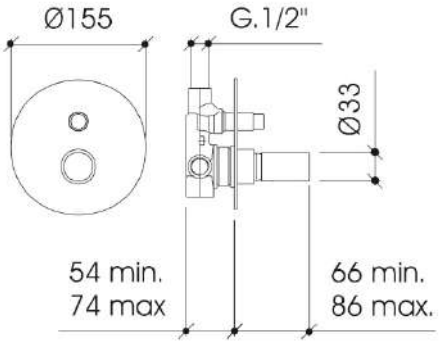

SHOWERS

112328

Wall mounted manual mixer with diverter and rectangular plate

Chrome 112328

COMPONENTS

Wall mounted shower mixer with diverter - concealed part

Chrome 112329/19C

Finish set including rectangular plate

Chrome 302326E

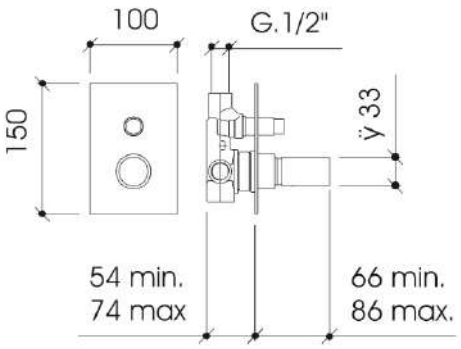

SHOWERS

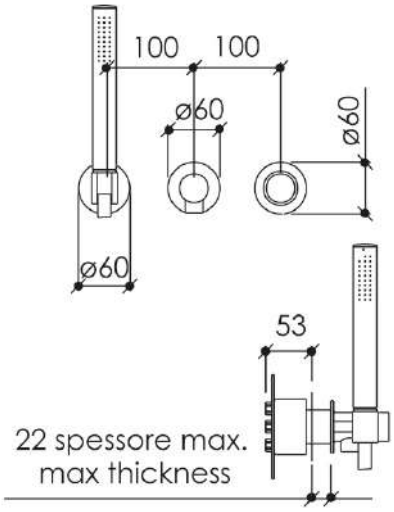

112327

Wall mounted manual mixer with diverter and hand shower

Chrome	112327
Matt Black	B112327
Matt White	W112327
Brushed Nickel	S112327
Polished Gold	G112327
Brushed Gold	H112327
Brushed Rose Gold	R112327
Crude	K112327

COMPONENTS

Wall mounted mixer with diverter - concealed part

Chrome	112322/19C
Matt Black	B112322/19C
Matt White	W112322/19C
Brushed Nickel	S112322/19C
Polished Gold	G112322/19C
Brushed Gold	H112322/19C
Brushed Rose Gold	R112322/19C
Crude	K112322/19C

Finish set including flanges and hand shower kit

Chrome	112324E
Matt Black	B112324E
Matt White	W112324E
Brushed Nickel	S112324E
Polished Gold	G112324E
Brushed Gold	H112324E
Brushed Rose Gold	R112324E
Crude	K112324E

SHOWERS

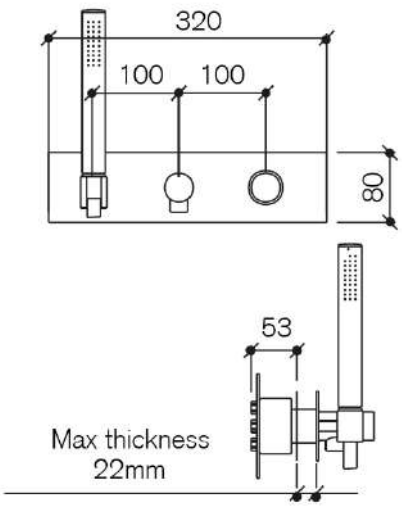

112326

Wall mounted manual mixer with plate, diverter and hand shower

Chrome	112326
Matt Black	B112326
Brushed Nickel	S112326
Polished Gold	G112326

COMPONENTS

Wall mounted mixer with diverter - concealed part

Chrome	112322/19C
Matt Black	B112322/19C
Brushed Nickel	S112322/19C
Polished Gold	G112322/19C

Finish set including plate and hand shower kit

Chrome	112322E
Matt Black	B112322E
Brushed Nickel	S112322E
Polished Gold	G112322E

GENERIC PARTS

GENERIC PARTS

CONTEMPORANEO**ITALIANO**

GENERIC PARTS

114040

Douche

Chrome 114040

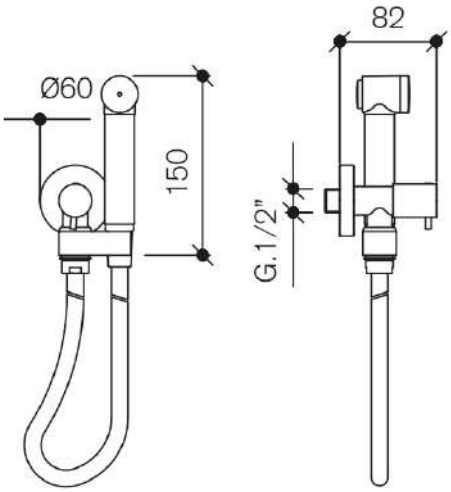

GENERIC PARTS

112060/C

1/2" stop valve

Chrome	112060/C
Matt Black	B112060/C
Matt White	W112060/C
Brushed Nickel	S112060/C
Polished Gold	G112060/C
Brushed Gold	H112060/C
Brushed Rose Gold	R112060/C

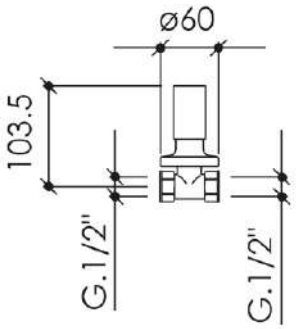

GENERIC PARTS

112491

Slide rail

Chrome 112491

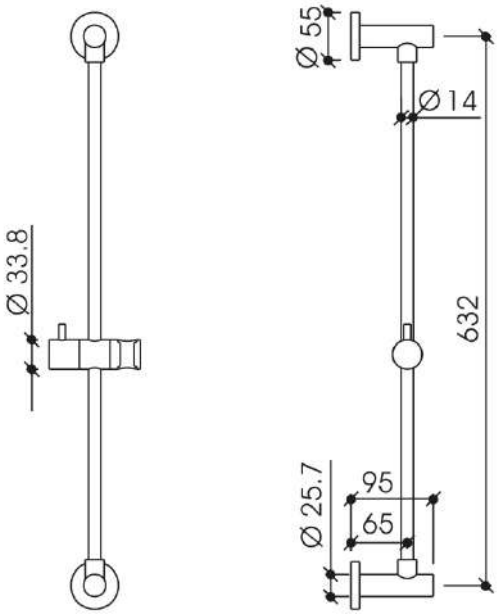

GENERIC PARTS

112492

Slide rail with wall connection, flexible hose and hand shower

Chrome 112492

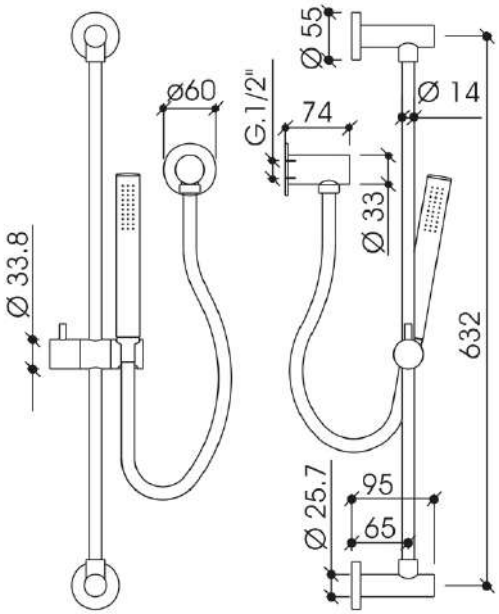

GENERIC PARTS

312492

Slide rail including hand shower

Chrome	312492

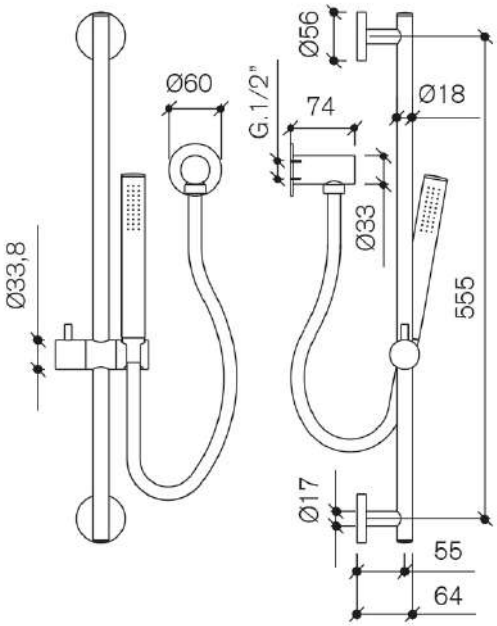

ACCESSORIES

ACCESSORIES

CONTEMPORANEO**ITALIANO**

ROBE HOOK

116000

Robe hook

Chrome	116000
Matt Black	B116000
Matt White	W116000
Brushed Nickel	S116000
Polished Gold	G116000
Brushed Gold	H116000
Brushed Rose Gold	R116000

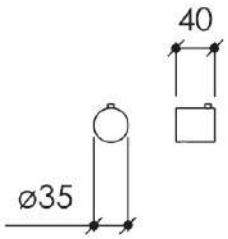

SHELF

116002

Towel rail/universal shelf

Chrome	116002
Matt Black	B116002
Matt White	W116002
Brushed Nickel	S116002
Polished Gold	G116002
Brushed Gold	H116002
Brushed Rose Gold	R116002

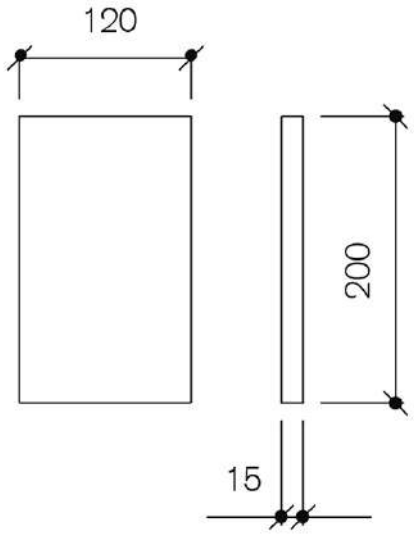

SHELF

116003

Shelf

Chrome	116003
Matt Black	B116003
Matt White	W116003
Brushed Nickel	S116003
Polished Gold	G116003
Brushed Gold	H116003
Brushed Rose Gold	R116003

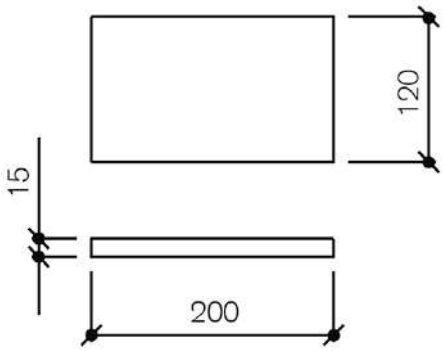

TOILET ROLL HOLDER

116001

Toilet roll holder

Chrome	116001
Matt Black	B116001
Matt White	W116001
Brushed Nickel	S116001
Polished Gold	G116001
Brushed Gold	H116001
Brushed Rose Gold	R116001

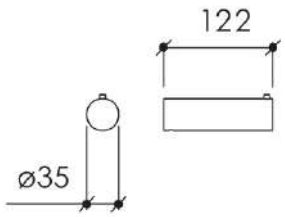

TOWEL RAIL

206006

Towel rail 570 mm

Chrome 206006

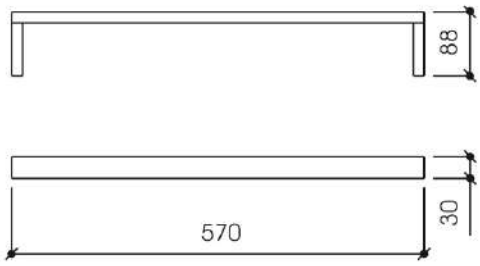

TOWEL RAIL

206007

Towel rail 360 mm

Chrome 206007

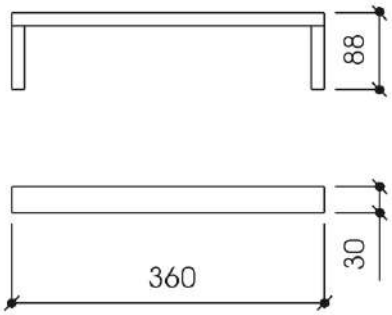

TOWEL RAIL

206008

Towel rail 360 mm - ø 20 mm

Chrome	206008
Matt Black	B206008
Matt White	W206008
Brushed Nickel	S206008
Polished Gold	G206008
Brushed Gold	H206008
Brushed Rose Gold	R206008

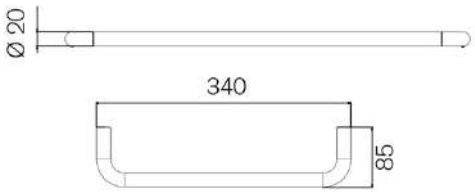

TOWEL RAIL

206009

Towel rail 570 mm - ø 20 mm

Chrome	206009
Matt Black	B206009
Matt White	W206009
Brushed Nickel	S206009
Polished Gold	G206009
Brushed Gold	H206009
Brushed Rose Gold	R206009

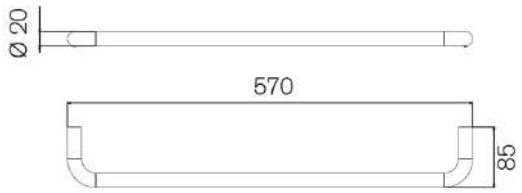

SOAP HOLDER

116009

Soap dish

Chrome	116009
Matt Black	B116009
Matt White	W116009
Brushed Nickel	S116009
Polished Gold	G116009
Brushed Gold	H116009
Brushed Rose Gold	R116009

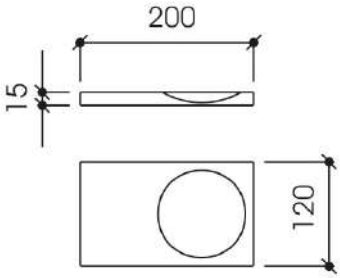

INDEX

TRENTA9

302326 34
302327 33
303000/F 11
303001/F 12
303002/F 13
304020/F 26
312032/49B 32
312326 35
312327 36
312400 31
312408 40
312409 39
312420 30
312421 41
312423 29
313106/F 38
313114/F 16
313114S/F 17
313115/F 20
313115S/F 21
313127/F 14
313127S/F 15
313128/F 18
313128S/F 19
313136/F 37
313161 22
313162 24
313171 23
313172 25
314114/F 28
314127/F 27

PEOPLE

152032/49B 51
152320 47
152321 53
152322 52
152327 45
152328 46
153000/F 43
154020/F 44
162326 55
162327 54
162400 48
162420 50
162423 49

TUBE

142300 63
142320 65
142320/29C 66
142323 64
143002 59
143004 60
143005/F 62
143006/F 57
143007/F 58
143008 61

ZERO

112144 109
112400 108
112405 105
112406 107
112407 106
112408 113
112409 112
112420 111
112421 114
112423 110
113100/F 87
113102 93
113103 94
113104/F 88
113105/F 90
113106/F 116
113108 95
113109 96
113114/F 73
113114S/F 74
113115/F 77
113115S/F 78
113120/F 89
113126/F 69
113127/F 70
113127S/F 72
113128/F 75
113128S/F 76
113136/F 115
113140 97
113141 99
113147/F 71
113160 98
113161 79
113162 81
113170 100
113171 80
113172 82
114114/F 85
114120/F 101
114121/F 102
114122/F 104
114123/F 103
114125/F 83
114127/F 84
114147/F 86
115100 91
115101 92

BONNY

152320 129
152327 128
342032/49B 125
342320 127
342322 124
342326 123
342327 126
343000/F 119
343001/F 120
343162 122
344020/F 121

ARCO

112042/19C 156
112054 153

112310 152
112311 162
112312 164
112315 149
112316 151
112317 150
112318 160
112319 159
112330 155
112331 161
112332/29B 163
112333 154
113010/F 131
113011/F 134
113012 139
113013 140
113014/F 132
113015/F 137
113016/F 158
113017 138
113018 141
113019 142
113030/F 133
113036/F 157
113050 143
113051 144
113052/F 135
113053/F 136
114030/F 145
114031/F 146
114032/F 148
114033/F 147

JUST

332032 175
332033 179
332320 173
332321 174
332322 177
332323 181
332324 176
332325 180
332500 178
332501 182
333000/F 167
333001/F 170
333002 168
333003 171
334020/F 169
334021/F 172

ELLE

112032/19C 206
112044 203
112300 202
112305 199
112306 201
112307 200
112308 208
112309 207
112320 205
112321 209
112322/29B 210
112323 204
113000/F 185
113001/F 188
113002 192
113003 193
113004/F 186
113005/F 191
113020/F 187
113040 194
113042/F 189
113043/F 190
114020/F 195
114021/F 196
114022/F 198
114023/F 197

SHOWERS

112032/49B 266
112032/49H 263
112052 262
112132/19D 236
112132/49A 243
112232/19A 238
112301/229B 265
112302/229B 264
112303 261
112326 270
112327 269
112328 268
112329 267
112330/89A 251
112330/99A 250
112330/99B 253
112330/99C 254
112380/99B 252
112600 244
112601 246
112602 248
112605 249
112610 245
112611 247
112700 213
112701 214
112702 215
112703 216
112710 217
112711 218
112712 219
112713 220
112720 221
112721 222
112722 223
112723 224
112730 225
112731 226
112732 227
112733 228
112740 229
112741 230
112742 231
112743 232
122322 255
122322V 256

122323	257
122323V	258
122324	259
122328	260
302132/49A	233
302133/49A	239
302134/49A	240
302135/49A	241
302136/49A	242
302140/49A	234
302141/49A	237
302142/49A	235

GENERIC PARTS

112060/C	274
112491	275
112492	276
114040	273
312492	277

ROBE HOOK

116000	279

SHELF

116002	280
116003	281

TOILET ROLL HOLDER

116001	282

TOWEL RAIL

206006	283
206007	284
206008	285
206009	286

SOAP HOLDER

116009	287

IDROSANITARIA BONOMI SPA
Via Monsuello 36,
25065, Lumezzane (Bs), Italy

Tel.: +39 0308922121
Fax: +39 0308922151

contemporaneo@idrobonomi.com
www.idrosanitariabonomi.com

bonomi